SIEMENS

ACVATIX™

Electromotive rotary actuators for butterfly and slipper valves

SAL..

with 90° rotary angle

- SAL31..: Operating voltage AC 230 V, 3-position control signal
- SAL61..: Operating voltage AC/DC 24 V, control signal
  0...10 V/4...20 mA/0...1000 Ω,
  with position feedback and override control
- SAL81..: Operating voltage AC/DC 24 V, 3-position control signal
- For direct mounting on butterfly or slipper valves, no adjustments required
- Manual adjuster, position indicator and status indication with LED
- Optional functions with auxiliary switches, potentiometer

Use

Electromotive rotary actuators for the operation of Siemens butterfly and slipper valves of the type series VFW41.., VFL41.., VFW41..U and VBF21.. as control or shut-off valves in heating, ventilation and air conditioning plants.

Type summary

Type	Stock no.	Angular rotation	Torque	Operating voltage	Positioning		LED	Manual adjustment [3]	
					signal	time			
SAL31.00T10 [1]	S55162-A108	90°	10 Nm	AC 230 V	3-position	120 s	-	Push and fix	-
SAL31.00T20 [1]	S55162-A110		20 Nm						
SAL31.00T40 [1]	S55162-A111		40 Nm						
SAL31.03T10 [1]	S55162-A109		10 Nm			30 s			
SAL31.03T10/F05 [1]	S55162-A121								
SAL61.00T10 [2]	S55162-A100			AC 24 V / DC 24 V	DC 0...10 V DC 4...20 mA 0...1000 Ω	120 s	✓		[4]
SAL61.00T20 [2]	S55162-A102		20 Nm						
SAL61.00T40 [2]	S55162-A103		40 Nm						
SAL61.03T10 [2]	S55162-A101		10 Nm			30 s			
SAL81.03T10/F05 [2]	S55162-A123								
SAL81.00T10 [2]	S55162-A104				3-position	120 s	-		-
SAL81.00T20 [2]	S55162-A106		20 Nm						
SAL81.00T40 [2]	S55162-A107		40 Nm						
SAL81.03T10 [2]	S55162-A105		10 Nm			30 s			
SAL81.03T10/F05 [2]	S55162-A122								

[1] Approval: CE

[2] Approvals: CE, UL

[3] Not designed for continuous operation

[4] Extra functions: Position feedback, override control

Scope of delivery

The rotary actuator, valve and accessories are supplied in individual packaging.

Ordering example

Type	Stock no.	Designation	Quantity
SAL31.00T10	S55162-A108	Rotary actuator	1
ASZ7.5	S55845-Z106	Potentiometer	1

Electrical accessories

Type	Auxiliary switch ASC10.51	Potentiometer ASZ7.5/1000	Function module AZX61.1
Stock no.	S55845-Z103	S55845-Z106	S55845-Z107
	Max. 2 total		
SAL31..	Max. 2	Max. 1	-
SAL61..		-	Max. 1
SAL81..		Max. 1	-

Mechanical accessories

Type	Weather shield ASK39.1	Mounting set				
		ASK31N for VBF21.. [1]	**ASK32N** for		**ASK33N** for VKF41.. [3]	**ASK35N** for VKF45.. [4]
			VBF21.. [1]	VBI31.. [2] VCI31.. [2] VBG31.. [2]		
Stock no.	S55845-Z109	S55845-Z100	S55845-Z211		S55845-Z101	S55845-Z102
SAL..T10..	✓	DN 65...150	DN 40...50	✓	✓	-
SAL..T20..		-	-		-	DN 40...65
SAL..T40..					DN 150...200	DN 80...200

[1] For installation with boiler flow from the left, the function module AZX61.1 must be used, in order to invert the actuator's acting direction.

[2] The type series VBI31.., VCI31.. und VBG31.. are no longer available for purchase.

[3] The type series VKF41.. was replaced by the series VFW41..U in the year 2022.

[4] The type series VKF45.. was replaced by the series VKF46.. in the year 2000; the series VKF46.. was replaced by the series VFW41.. in 2022.

Spare part kit

Type / Stock no.		
8000060844	**Housing cover** 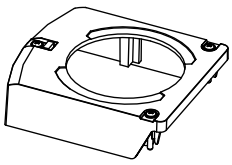	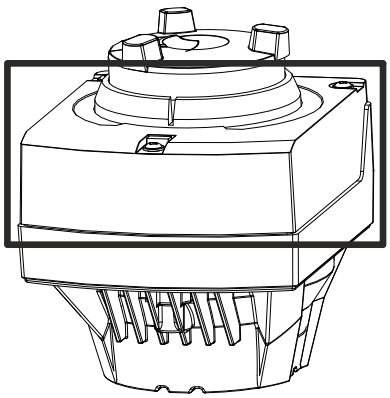
	2 x adapter ● 1 pc. 14 mm ● 1 pc. 11 mm 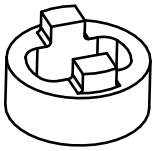	
	4 x screw ● 2 pcs. M5 x 20 mm ● 2 pcs. M6 x 20 mm 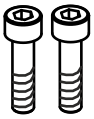	

Equipment combinations

						SAL..T10	SAL..T10/F05	SAL..T20	SAL..T40
					Angular rotation	90°			
					Torque	10 Nm		20 Nm	40 Nm
	Datasheet	**Valve type** [1]	**DN**	**k_{VS}** [m^3/h]	**Mounting set**				
Slipper valves						**Δp_{max}** [kPa]			
PN 6	N4241	**VBF21.40**	40	25	ASK32N [2]	30	-		
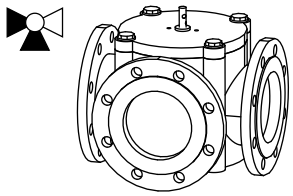		**VBF21.50**	50	40					
		VBF21.65	65	63	ASK31N [2]				
		VBF21.80	80	100					
		VBF21.100	100	160					
		VBF21.125	125	550					
1...120 °C		**VBF21.150**	150	820					
Butterfly valves						**Δp_s** [kPa]			
PN 6/10/16	A6V101029254	**VFW41.40U**	40	40	-	-	500	-	
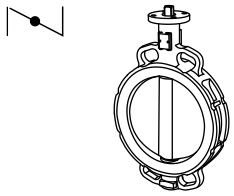		**VFW41.50U**	50	100					
		VFW41.65U	65	155					
		VFW41.80U	80	260					
		VFW41.100U	100	520					
		VFW41.125U	125	820			300		
		VFW41.150U	150	1600			250		
-20...120 °C		**VFW41.200U**	200	4000			125		
PN 6/10/16	A6V101029242	**VFW41.40**	40	40	-	-		1600	-
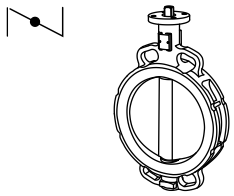		**VFW41.50**	50	100					
		VFW41.65	65	155					
		VFW41.80	80	260				-	1600
		VFW41.100	100	520					1200
-20...120 °C		**VFW41.125**	125	820					800
PN 10/16	A6V101029242	**VFL41.40**	40	40	-	-		1600	-
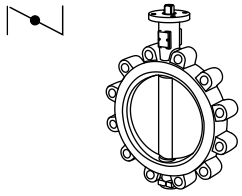		**VFL41.50**	50	100					
		VFL41.65	65	155					
		VFL41.80	80	260				-	1600
		VFL41.100	100	520					1200
-20...120 °C		**VFL41.125**	125	820					800

[1] Cf. corresponding datasheet or basic documentation for maximum flow speed.

[2] For installation with boiler flow from the left (VBF21.. factory setting), the function module AZX61.1 must be used, in order to invert the actuator's acting direction.

Product documentation

Title	Contents	Document ID
Actuators SAX.., SAY.., SAV.., SAL.. for valves	Basic documentation: Detailed information on valve actuators, including Modbus types Stroke actuators for valves with 15/20/40 mm stroke and rotary actuators for butterfly valves	CE1P4040en
Valve Actuator DIL Switch Characteristic Overview	Commissioning / configuration: Illustration/description of the characteristics of the valve and actuator combination, depending on the DIL switch setting	A6V12050595
Butterfly valves PN 6/10/16 - VFW41.., VFL41..	Datasheet: Product description	A6V101029242
Butterfly valves PN 6/10/16 - VFW41..U		A6V101029254
Three-port slipper valves PN 6 - VBF21..		N4241

Related documents such as the environmental declarations, declarations of conformity, etc., can be downloaded from the following Internet address:

www.siemens.com/bt/download

Notes

Safety

CAUTION	
	National safety regulations Failure to comply with national safety regulations may result in personal injury and property damage. ● Observe national provisions and comply with the appropriate safety regulations.

Engineering

SAL31.. / SAL81..

3-position rotary actuators must have their own specific controller, see "Internal diagrams [▶ 13]".

SAL61..

Up to 10 rotary actuators can drive in parallel on a controller output with a rating of 1 mA. Modulating actuators have an input impedance of 100 kΩ.

ASZ7.5

Actuators with a DC 0...9.8 V feedback signal are recommended for the combination SIMATIC S5/S7 and position feedback.

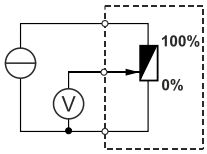

Signal peaks in potentiometer ASZ7.5 may result in error messages on Siemens SIMATIC. This is not the cause, however, when combined with Siemens HVAC controllers. The reason is the higher resolution and faster reaction time on SIMATIC.

Use the potentiometer as voltage divider on the 3-wire connection. Powering the potentiometer over the wiper may shorten the life cycle of the potentiometer. Signal peaks increase in frequency and scope over the lifespan in this operating mode.

Mounting

Mounting positions	
Indoor use	**Outdoor use [1]**
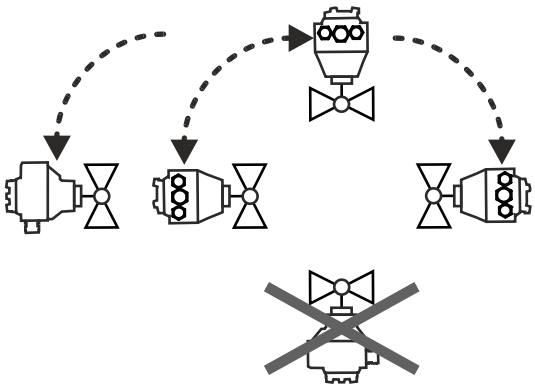	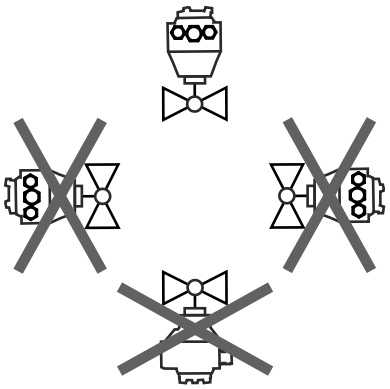

[1] Only in combination with weather shield ASK39.1. Protection degree IP 54 remains as is.

Maintenance

The rotary actuators are maintenance-free.

Disposal

	This symbol or any other national label indicate that the product, its packaging, and, where applicable, any batteries may not be disposed of as domestic waste. Delete all personal data and dispose of the item(s) at separate collection and recycling facilities in accordance with local and national legislation. For additional details, refer to Siemens information on disposal.

Warranty service

The application-specific technical data is guaranteed only in combination with the Siemens products listed in the 'Device combinations' section. If third-party products are used, any guarantee provided by Siemens will be invalidated.

!

When using the actuators in combination with slipper valves of other manufacture, correct functioning must be ensured by the user.

The use of rotary actuators SAL..T10.. with butterfly valves is only permitted for the Siemens type series VKF41.. and VKF41..U.

Technical data

Power supply			
Operating voltage	SAL31..	AC 230 V (±15 %)	
	SAL61..	AC 24 V (±20 %) / DC 24 V (+20 % / -15 %) (SELV / PELV)	
	SAL81..		
Frequency		45...65 Hz	
External supply line fusing (EU)		• Slow-blow fuse 6...10 A • Circuit breaker max. 13 A, tripping characteristic B, C, D as per EN 60898 • Power source with current limitation of max. 10 A	
Power consumption at 50 Hz		*Running*	*Holding*
	SAL31.00T10	3.4 VA / 1.9 W	2.1 VA / 1.2 W
	SAL31.00T20	4.9 VA / 2.7 W	2.5 VA / 1.3 W
	SAL31.00T40	6.6 VA / 3.7 W	2.4 VA / 1.4 W
	SAL31.03T10, SAL31.03T10/F05	6.6 VA / 3.7 W	2.1 VA / 1.2 W
	SAL61.00T10	5.7 VA / 2.2 W	4.5 VA / 1.7 W
	SAL61.00T20	7.6 VA / 3.1 W	5.1 VA / 2.0 W
	SAL61.00T40	9.2 VA / 3.9 W	4.8 VA / 4.8 W
	SAL31.03T10, SAL31.03T10/F05	9.5 VA / 4.0 W	4.6 VA / 1.8 W
	SAL81.00T10	3.9 VA / 2.3 W	2.6 VA / 1.5 W
	SAL81.00T20	5.1 VA / 3.0 W	2.7 VA / 1.5 W
	SAL81.00T40	7.0 VA / 4.1 W	2.9 VA / 1.7 W
	SAL81.03T10, SAL81.03T10/F05	6.1 VA / 3.6 W	2.6 VA / 1.5 W

Functional data			
Positioning time at nominal rotation angle	SAL..00..	120 s	
	SAL..03..	30 s	
Torque		*Running*	*Holding*
	SAL..T10..	10 Nm	Min. 4 Nm
	SAL..T20..	20 Nm	Min. 14 Nm
	SAL..T40..	40 Nm	
Nominal rotation angle		90°	
Permissible medium temperature (valve fitted)		-10...120 °C	

Signal inputs			
Positioning signal Y			
	SAL31.., SAL81..		3-position
	SAL31..	Voltage	AC 230 V (±15 %)
	SAL81..		AC 24 V (±20 %) / DC 24 V (+20 % / -15 %)

Signal inputs			
	SAL61..		
	DC 0...10 V	Power consumption	≤ 0.1 mA
		Input impedance	≥ 100 kΩ
	DC 4...20 mA	Power consumption	DC 4...20 mA (±1 %)
		Input impedance	≤ 500 Ω

Parallel connection	
SAL61..	≤ 10 (depending on controller output)

Override control SAL61..		
Positioning signal Z		R = 0...1000 Ω, G, G0
	R = 0...1000 Ω	Stroke / rotation proportional to R
	Z connected to G	Max. stroke 100 % [1)]
	Z connected to G0	Min. stroke 0 % [1)]
	Voltage	Max. AC 24 V (±20 %)
		Max. DC 24 V (+20 % / -15 %)
	Power consumption	≤ 0.1 mA

Position feedback SAL61..		
Position feedback U	Voltage range	DC 0...10 V
	Load impedance	> 10 kΩ resistive
	Load	Max. 1 mA

Connection cable	
Wire cross-sectional area	0.75...1.5 mm^2, AWG 20...16 [2)]
Cable entries	• 2 entries ø 20.5 mm (for M20) • 1 entry ø 25.5 mm (for M25)

Degree and class of protection		
Housing protection, upright to horizontal		IP 54 as per EN 60529 [3)]
Protection class		As per EN 60730
	SAL31.., AC 230 V	II
	SAL61.., AC/DC 24 V	III
	SAL81.., AC/DC 24 V	

Environmental conditions		
Operation		As per IEC 60721-3-3 (1994)
	Climatic conditions	Class 3K5
	Mounting location	Indoors, weather-protected [4]
	Temperature general	-15...55 °C
	Humidity (non-condensing)	5...95 % r.h.
Transport		As per IEC 60721-3-2 (1994)
	Climatic conditions	Class 2K3
	Temperature	-25...70 °C
	Humidity	< 95 % r.h.
Storage		As per IEC 60721-3-1 (1994)
	Climatic conditions	Class 1K3
	Temperature	-15...55 °C
	Humidity	5...95 % r.h.
Max. medium temperature at fitted valve		120 °C

Directives and standards		
Product standard		EN 60730-x
Electromagnetic compatibility (field of use)		For residential, commercial and industrial environments
EU conformity (CE)		8000061820 (CE1T4502xx) [5]
UK conformity (UKCA)		A5W00196130A [5]
RCM conformity		A5W00002575 [5]
EAC compliance		Eurasian compliance for all SAL..
UL, cUL	AC 230 V	-
	AC/DC 24 V	UL 873 http://ul.com/database; File no. E35198

Environmental compatibility
The product environmental declaration 7173310562 (CE1E4502xx) [5] contains data on environmentally compatible product design and assessments (RoHS compliance, materials composition, packaging, environmental benefit, disposal).

Dimensions
See "Dimensions [▶ 14]"

Accessories [6]		
Potentiometer ASZ7.5/1000		0...1000 Ω ± 5 %
	Voltage	DC 10 V
	Current rating	<4 mA

Accessories [6]		
Auxiliary switch ASC10.51	Switching capacity	AC 24...230 V, 6 (2) A, potential free
External supply line fusing		• Slow-blow fuse 6...10 A • Circuit breaker max. 13 A, tripping characteristic B, C, D as per EN 60898 • Power source with current limitation of max. 10 A
US installation, UL & cUL		AC 24 V class 2, 5 A general purpose

[1] Observe acting direction of DIL switches

[2] AWG = American wire gauge

[3] For outdoor use, always use weather shield ASK39.1, housing protection IP 54 remains as is.

[4] See also "Mounting [▶ 6]".

[5] The documents can be downloaded at https://www.siemens.com/bt/download.

[6] UL-approved component

Connection diagrams

Internal diagrams

SAL31..	Accessories		
	A	*and/or*	B
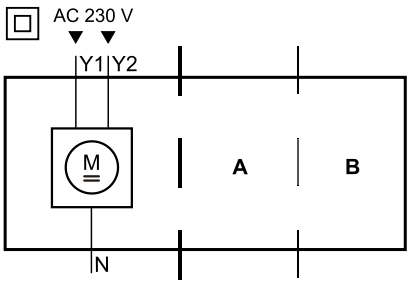	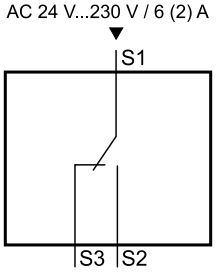	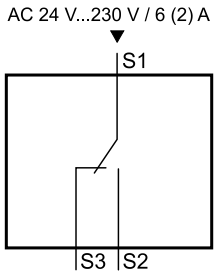 *or* 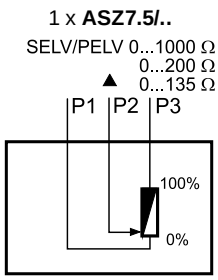

SAL61..	Accessories		
	A	and/or	B
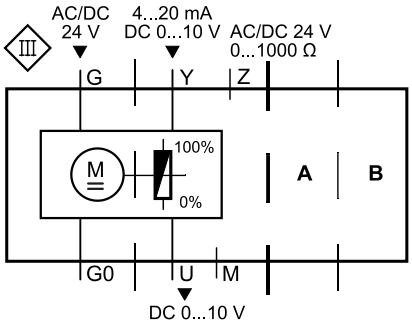	1 x **ASC10.51** AC 24 V...230 V / 6 (2) A 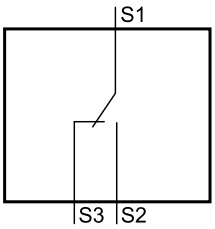		1 x **ASC10.51** AC 24 V...230 V / 6 (2) A 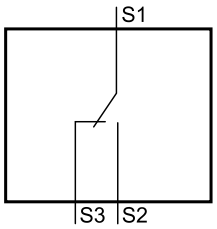

SAL81..	Accessories		
	A	and/or	B
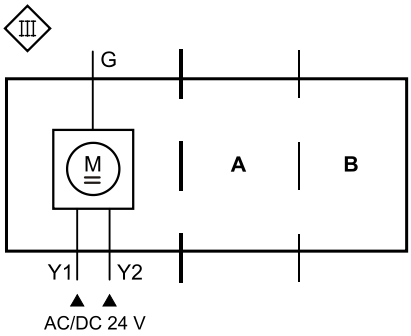	1 x **ASC10.51** AC 24 V...230 V / 6 (2) A 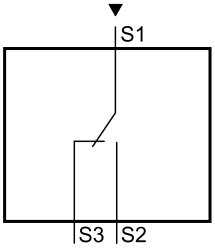		1 x **ASC10.51** AC 24 V...230 V / 6 (2) A 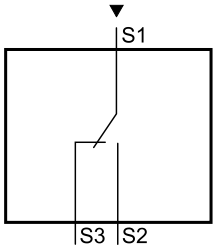 *or* 1 x **ASZ7.5/..** SELV/PELV 0...1000 Ω 0...200 Ω 0...135 Ω 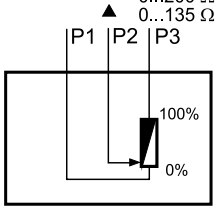

Connection terminals

Actuators

SAL31..	AC 230 V	3-position
N	System neutral (SN)	
Y1	Positioning signal (actuator spindle turns clockwise)	
Y2	Positioning signal (actuator spindle turns counterclockwise)	

SAL61..	AC / DC 24 V	DC 0...10 V / 4...20 mA / 0...1000 Ω
G0	System neutral (SN)	
G	System potential (SP)	
Y	Positioning signal for DC 0...10 V / 4...20 mA	
M	Measuring neutral	
U	Position feedback DC 0...10 V - (reference potential is measuring neutral M)	
Z	Control signal override control	

SAL81..	AC / DC 24 V	3-position
G	System potential (SP)	
Y1	Positioning signal (actuator spindle turns clockwise)	
Y2	Positioning signal (actuator spindle turns counterclockwise)	

Accessories

Auxiliary switch ASC10.51	Adjustable switching points, AC 24...230 V		Diagram
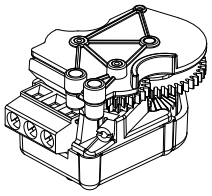	1	System potential (SP)	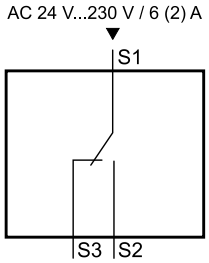
	2	Closing contact (actuator spindle turns clockwise)	
	3	Opening contact (actuator spindle turns counterclockwise)	

Potentiometer ASZ7.5	Adjustment of zero point, DC 10 V		Diagram
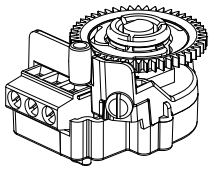	1	Measuring neutral	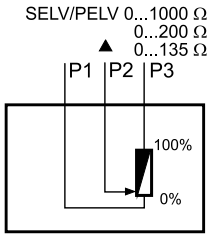
	2	0...x Ω	
	3	x...0 Ω	
		x = 135 Ω, 200 Ω, 1000 Ω	

Internal diagrams

SAL31..

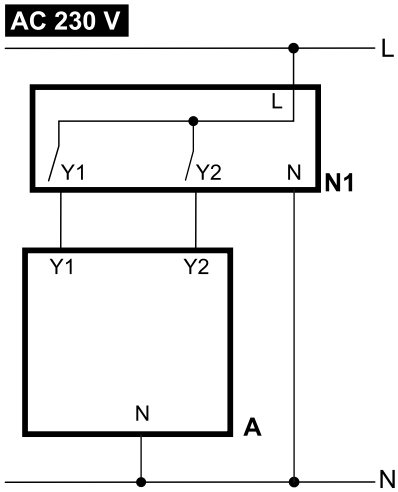

A	Actuator
L	Phase
N	Neutral
N1	Controller
Y1, Y2	Positioning signals

SAL61..

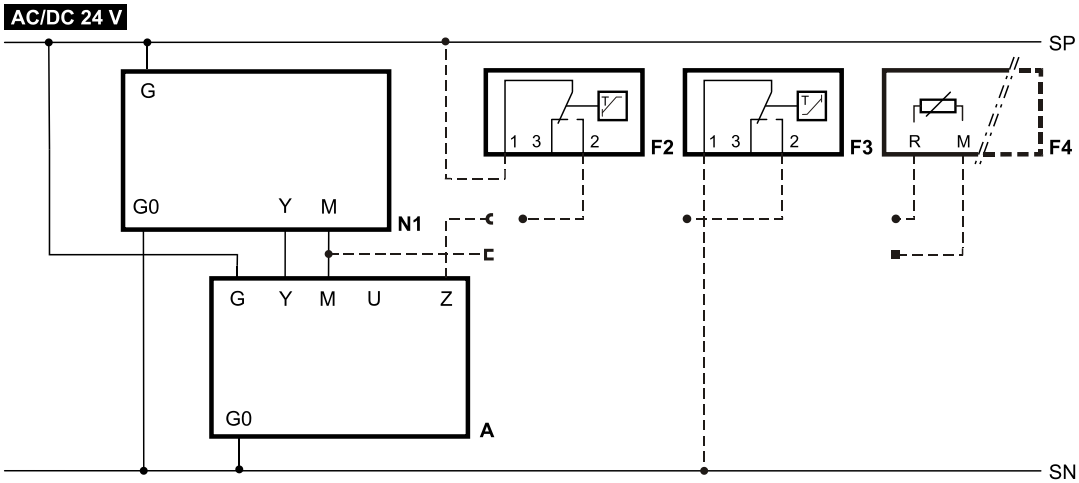

A	Actuator	**N1**	Controller
M	Measuring neutral	**U**	Position feedback - (reference potential is measuring neutral M)
SN	System neutral	**Y**	Positioning signal
SP	System potential AC / DC 24 V	**Z**	Positioning signal override control
F2	Frost protection monitor	*Terminals 1 – 2:* Frost hazard / Sensor is off (monitor closes with frost)	*Terminals 1 – 3:* Normal operation
F3	Temperature detector	**F4**	Frost protection monitor with 0...1000 Ω signal output, does **NOT** QAF21.. or GAQ61..

SAL81..

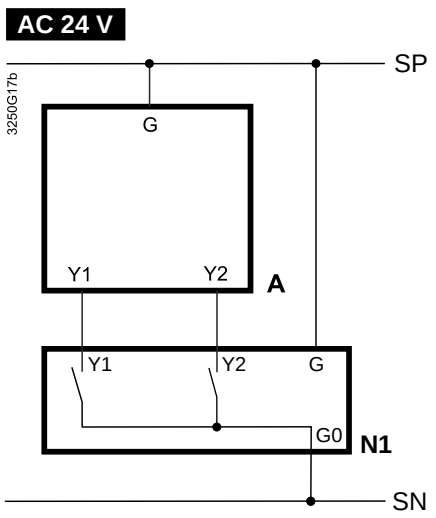

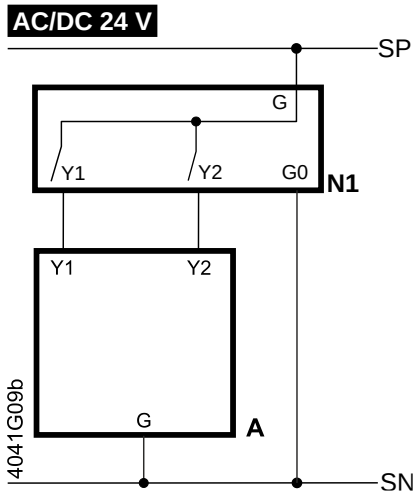

A	Actuator	**SN**	System neutral
N1	Controller	**SP**	System potential
Y1, Y2	Positioning signals		

Dimensions

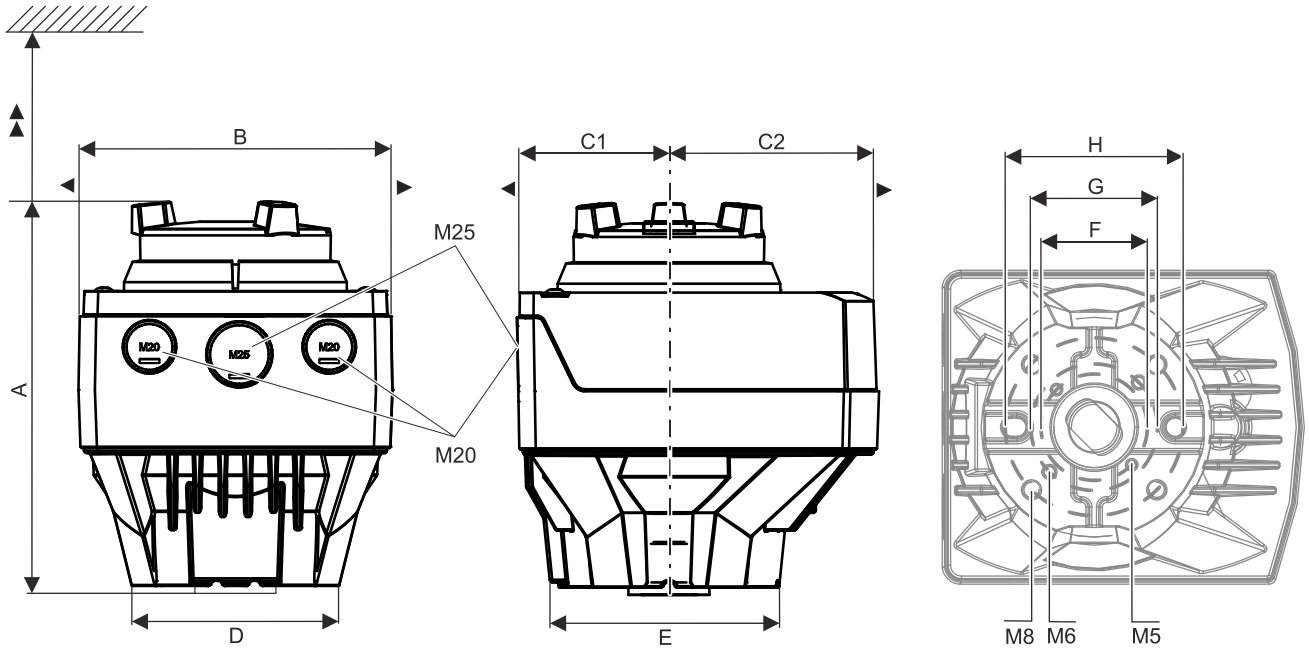

Type	A	B	C	C1	C2	D	E	F	G	H	►	►►	kg		
	[mm]												SAL..T10..	SAL..T20	SAL..T40
SAL..	160	124	150	68	82	82	88	42	50	70	100	200	1.475	1.600	1.625
With ASK39.1	185	154	300	200	100	-							+ 0.235		

With mounting set ASK3..N

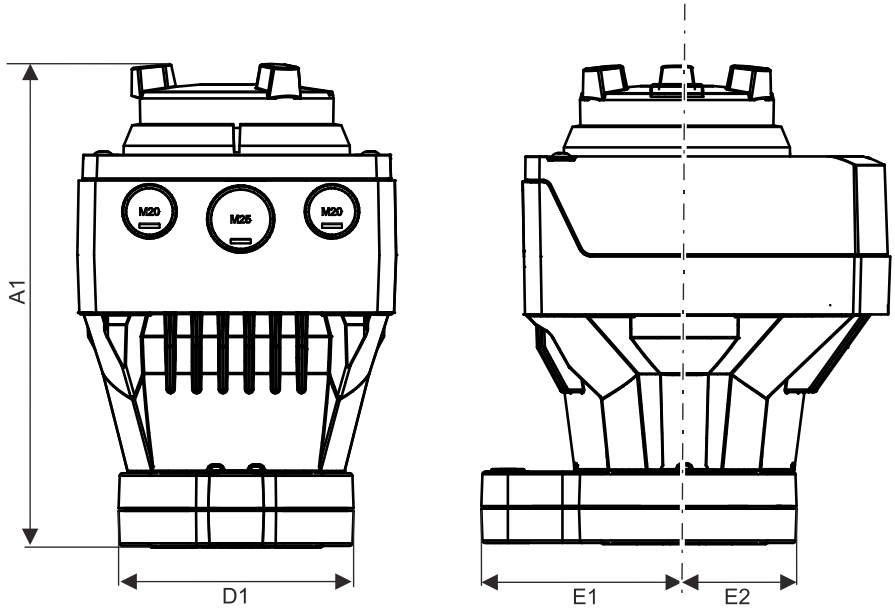

Type	A1	D1	E1	E2	
SAL.. with ASK3..N	188	88	80	44	
With ASK39.1	213	-			

Revision numbers

	Type	Stock no.	Valid from rev. no.
	SAL31.00T10	S55162-A108	..F
	SAL31.00T20	S55162-A110	..E
	SAL31.00T40	S55162-A111	..C
	SAL31.03T10	S55162-A109	..F
	SAL31.03T10/F05	S55162-A121	..A
	SAL61.00T10	S55162-A100	..E
	SAL61.00T20	S55162-A102	..D
	SAL61.00T40	S55162-A103	..B
	SAL61.03T10	S55162-A101	..E
	SAL61.03T10/F05	S55162-A123	..A
	SAL81.00T10	S55162-A104	..E
	SAL81.00T20	S55162-A106	..D
	SAL81.00T40	S55162-A107	..B
	SAL81.03T10	S55162-A105	..E
	SAL81.03T10/F05	S55162-A122	..A

Issued by
Siemens Switzerland Ltd
Smart Infrastructure
Global Headquarters
Theilerstrasse 1a
CH-6300 Zug
+41 58 724 2424
www.siemens.com/buildingtechnologies

© Siemens 2011 - 2025
Technical specifications and availability subject to change without notice.

Document ID CE1N4502en

Edition 2025-05-07