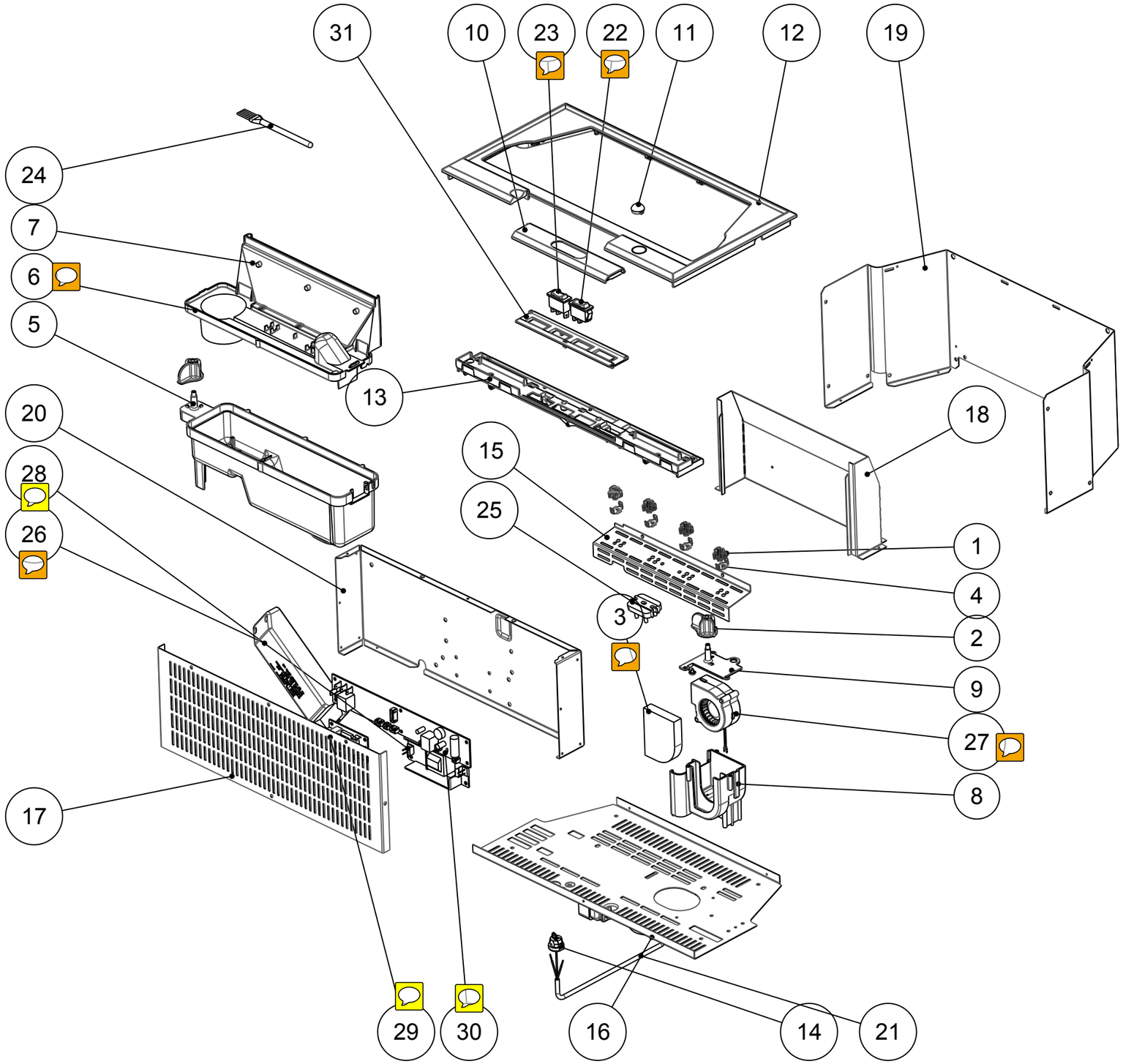

NO.	PART NO.	DESCRIPTION	QTY
1	1/66765/0	HOLDER	4
2	1/67004/0	TAB SWITCH	2
3	1/67007/0	FILTER	1
4	1/67160/0	COVER	4
5	1/68975/0	SUMP	1
6	1/68976/0	NOZZLE BASE	1
7	1/68981/0	NOZZLE	1
8	1/69089/0	SUMP FAN HOUSING	1
9	1/69157/0	FAN HOUSING CAP	1
10	1/81168/0	Flap	1
11	1/81169/0	Receiver Lens	1
12	1/81188/0	Frame STD - No Remote	1
13	1/81202/0	Controls Moulding	1
14	1/81212/0	Strain Relief Bushing SR6N2-4	1
15	2/50225/0	LAMPHOLDER BRKT	1
16	21/81142/0	Base Panel	1
17	21/81144/0	Front Panel	1
18	21/81145/0	LIGHT BAFFLE	1
19	21/81158/0	Wrap	1
20	22/50222/0	Inner Panel Nut Assy	1
21	3/16766/0	SHORT CORDSET	1
22	3/21056/0	ON OFF SWITCH	1
23	3/21612/0	INRUSH SWITCH	1
24	3/22494/0	CLEANING BRUSH	1
25	3/22661/0	4 POLE 38X30 TERMINAL BLOCK	1
26	3/22834/0	12V HALOGEN POWER SUPPLY	1
27	3/22844/0	24V DC MOTOR	1
28	3/22851/0	24V DC PSU	1
29	3/22867/0	10amp CHOKE	1
30	3/22918/0	MAIN PCB	1
31	31/81170/0	Controls Cover -Std printed	1
32	5/14039/0	No.6x1/4 Screw	1

GLEN DIMPLEX RESEARCH & DEVELOPMENT
Dunleer, Co.Louth, Ireland. Tel: ++353(0)41 6872200. Fax: ++353(0)41 6851464.

THIS DRAWING IS SUPPLIED IN CONFIDENCE AND THE COPYRIGHT THEREOF IS THE PROPERTY OF GLEN DIMPLEX : IT MUST NOT BE USED BY A THIRD PARTY WITHOUT PRIOR PERMISSION. ©2012

DRAWN BY	CL	A3	TITLE 400 Module No Stat
SERIES	A		
SERIES DATE	19/07/12		
ISSUE	2		DRG NO 4/20095/0
PROJECT	Optimyst - 400 Module		

OCN	09292
DATE	19/07/12