EN

Mounting pole

Quick Installation Guide

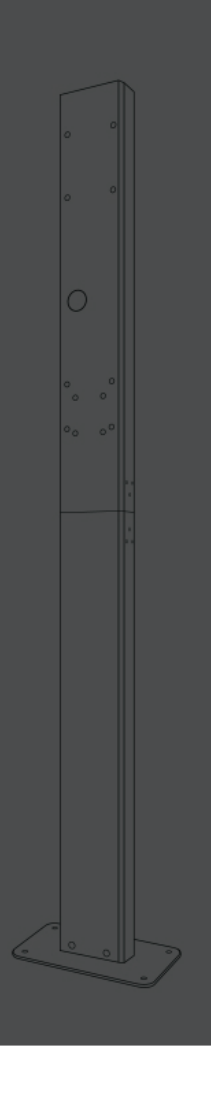

01

Mode C installation guide from page01 to page10

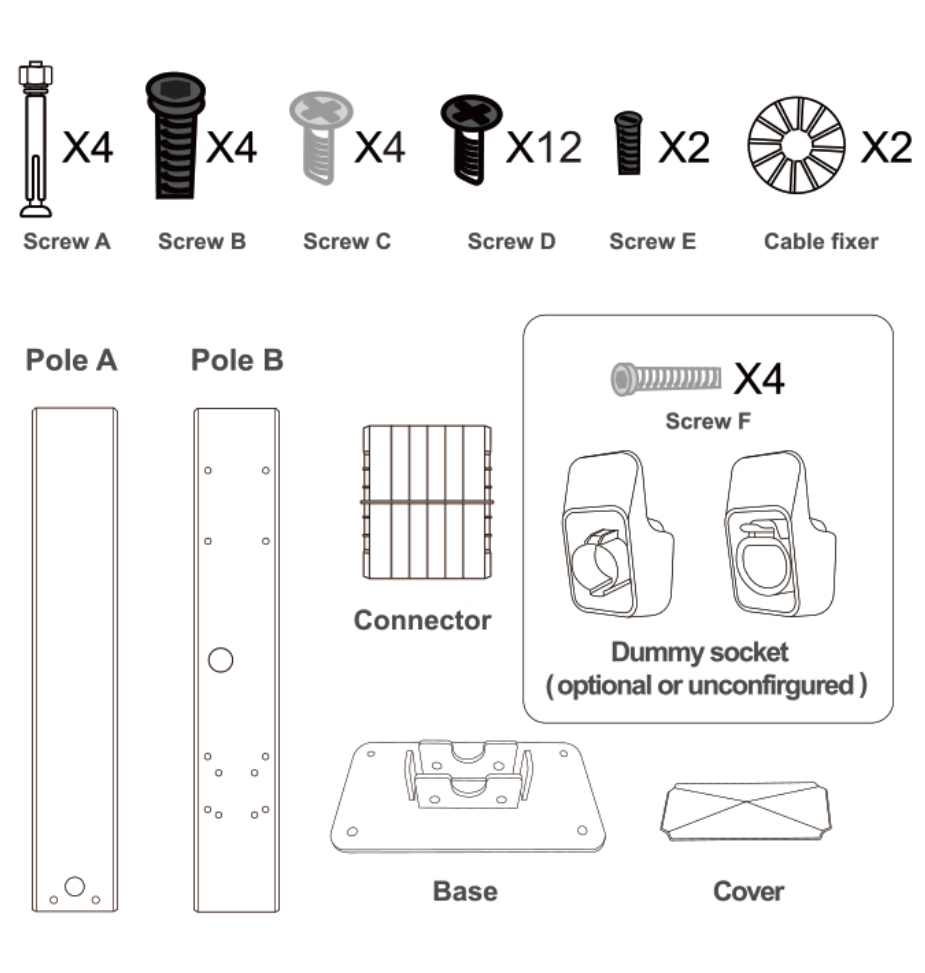
X4
Screw A
X4
Screw B
X4
Screw C
X12
Screw D
X2
Screw E
X2
Cable fixer
Pole A
Pole B
Connector
X4
Screw F
Dummy socket
(optional or unconfirgured)
Base
Cover

02

Fix the Base on the ground

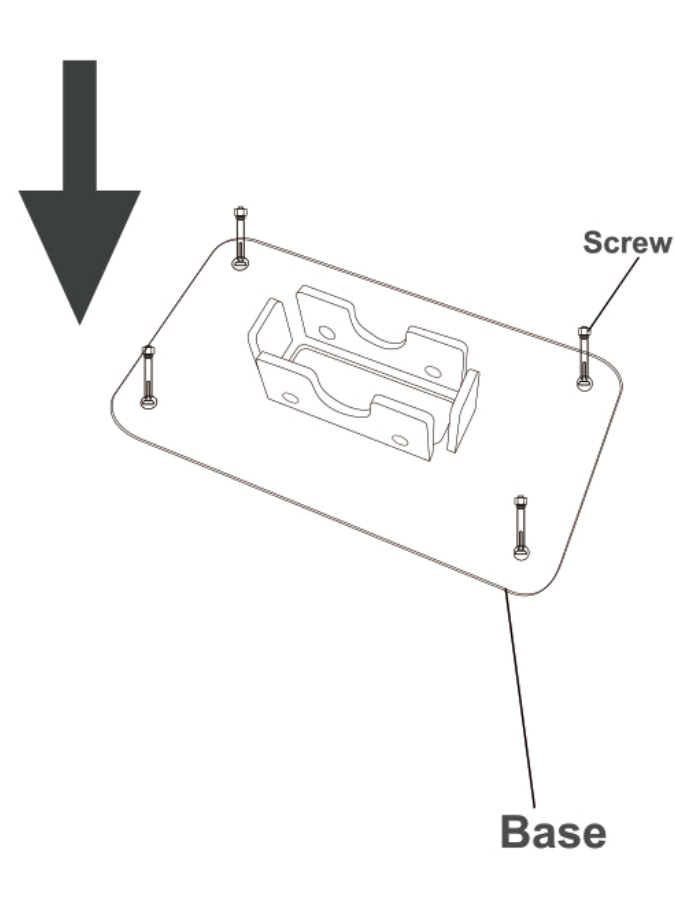
Screw A
Base

03

Fix the pole A on the Base

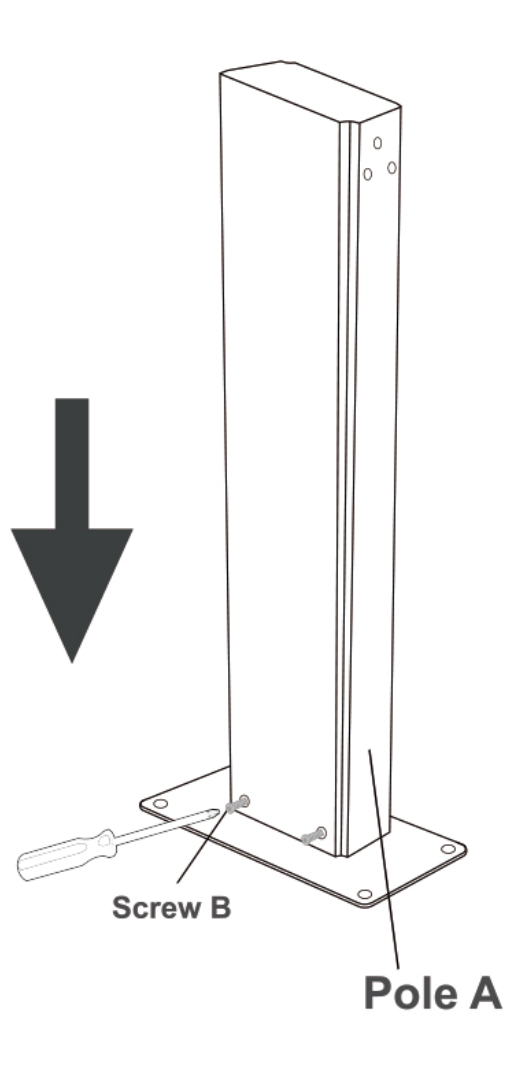
Screw B
Pole A

04

Fix the dummy socket on the Pole B

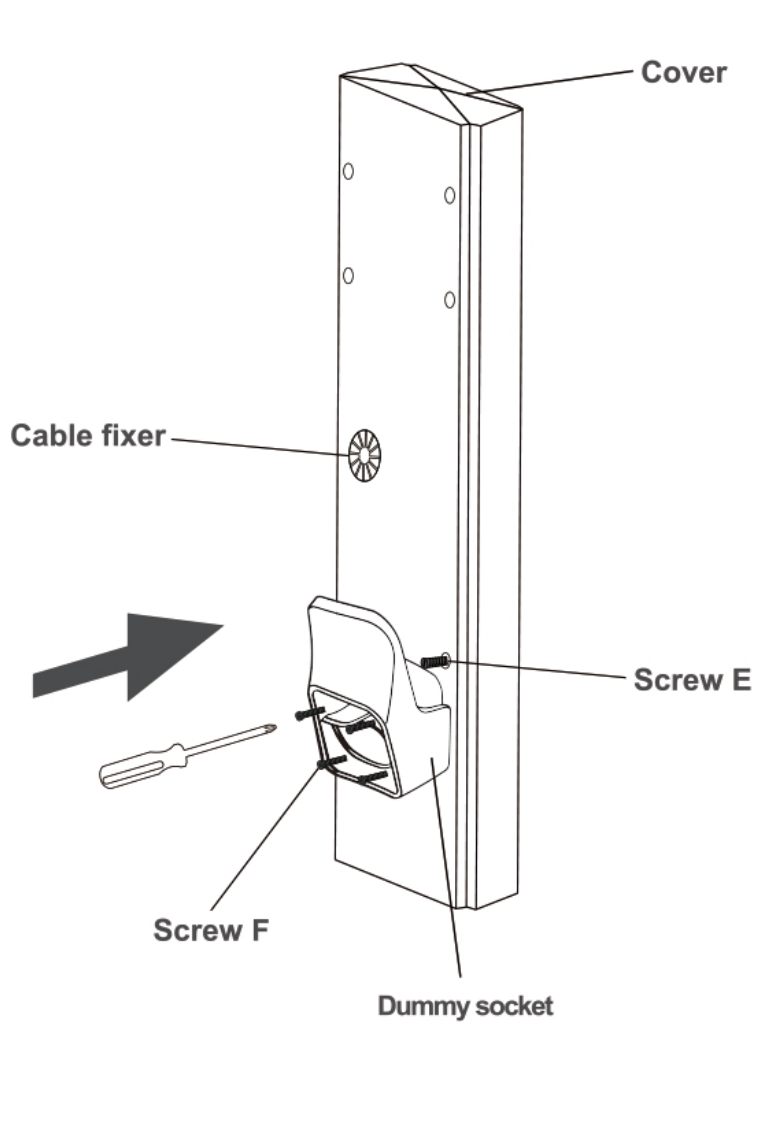
Cover
Cable fixer
Screw E
Screw F
Dummy socket

05

Install the charging station on the Pole B

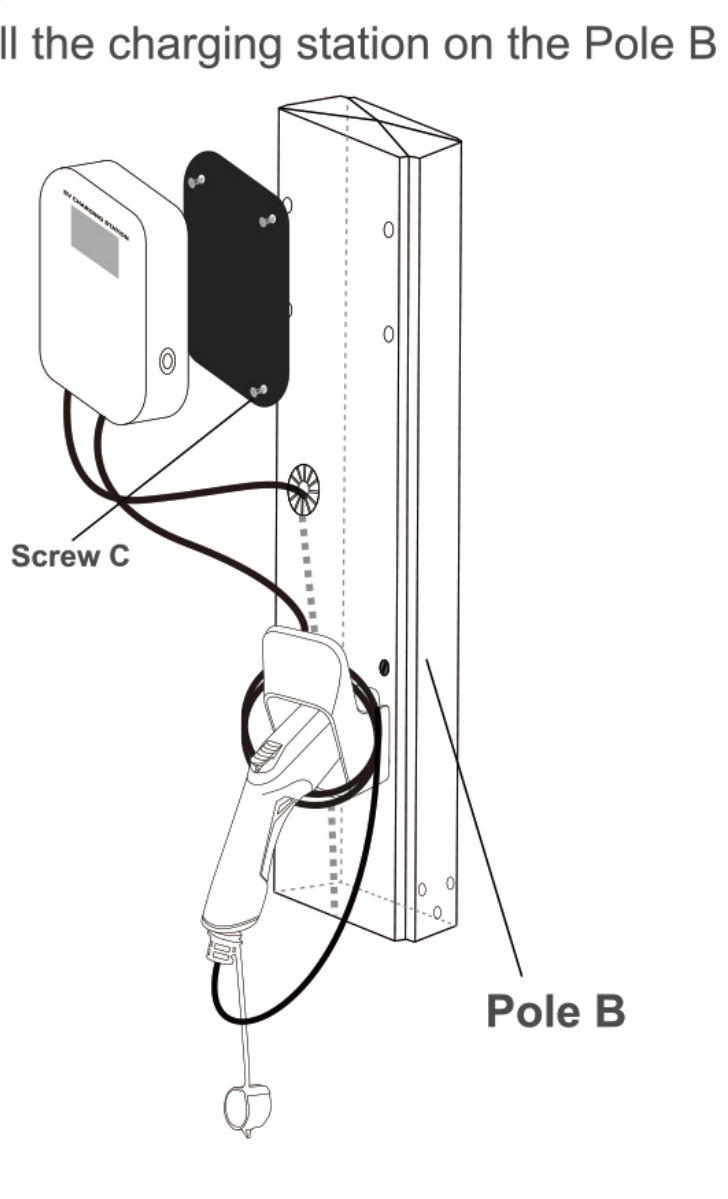
Screw C
Pole B

06

Insert the Connector to the Pole A

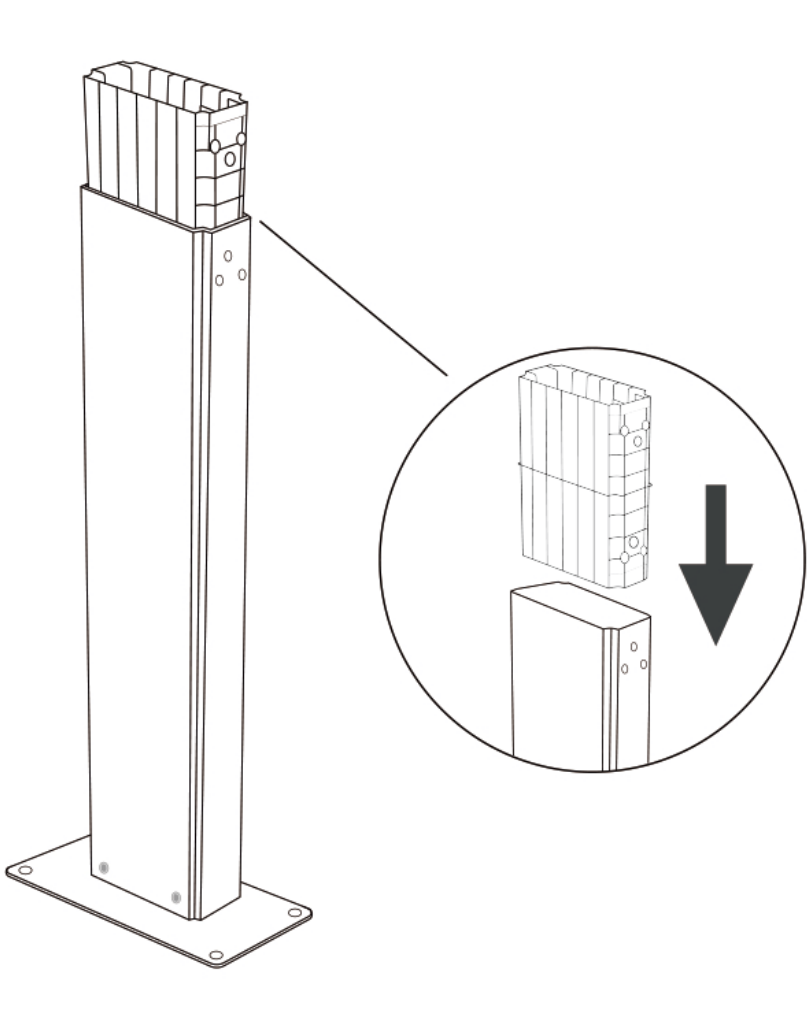

07

Put the power cord inside the Pole A

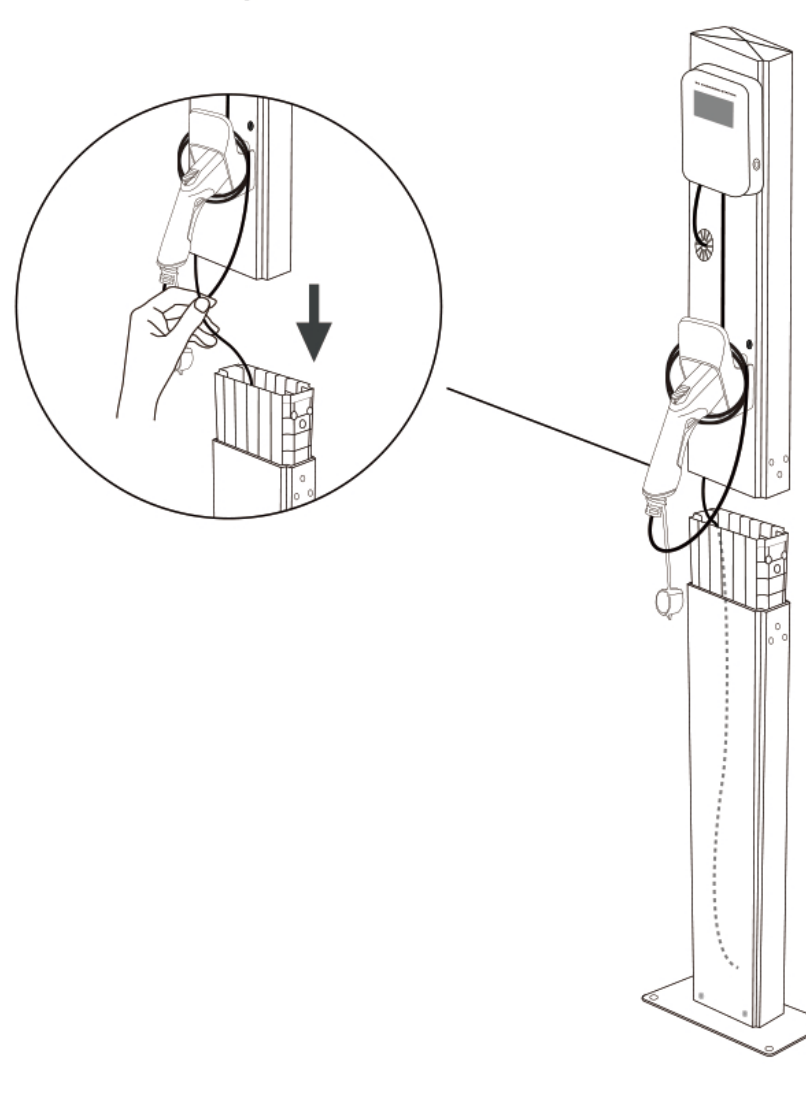

08

Pull out the power cord from the bottom hole of the Pole A

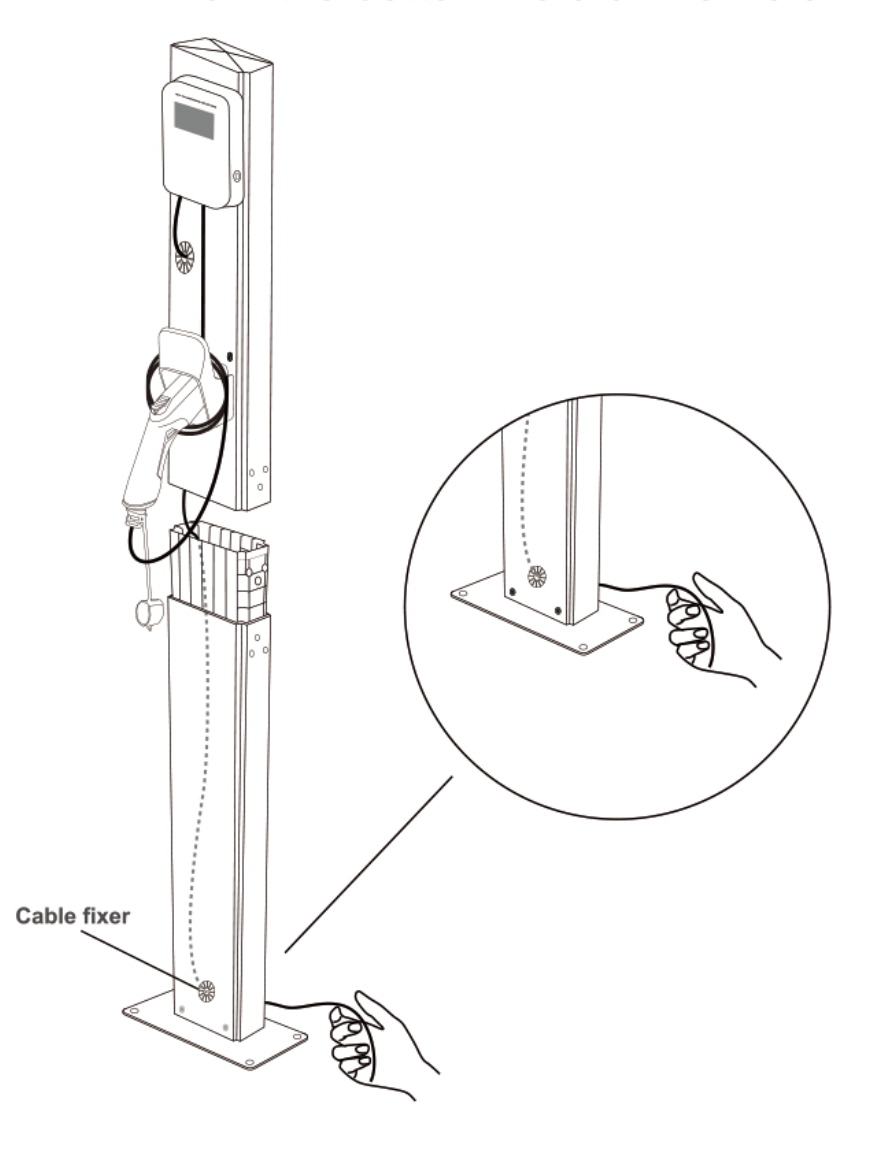
Cable fixer

09

Put the Pole B on the Connector

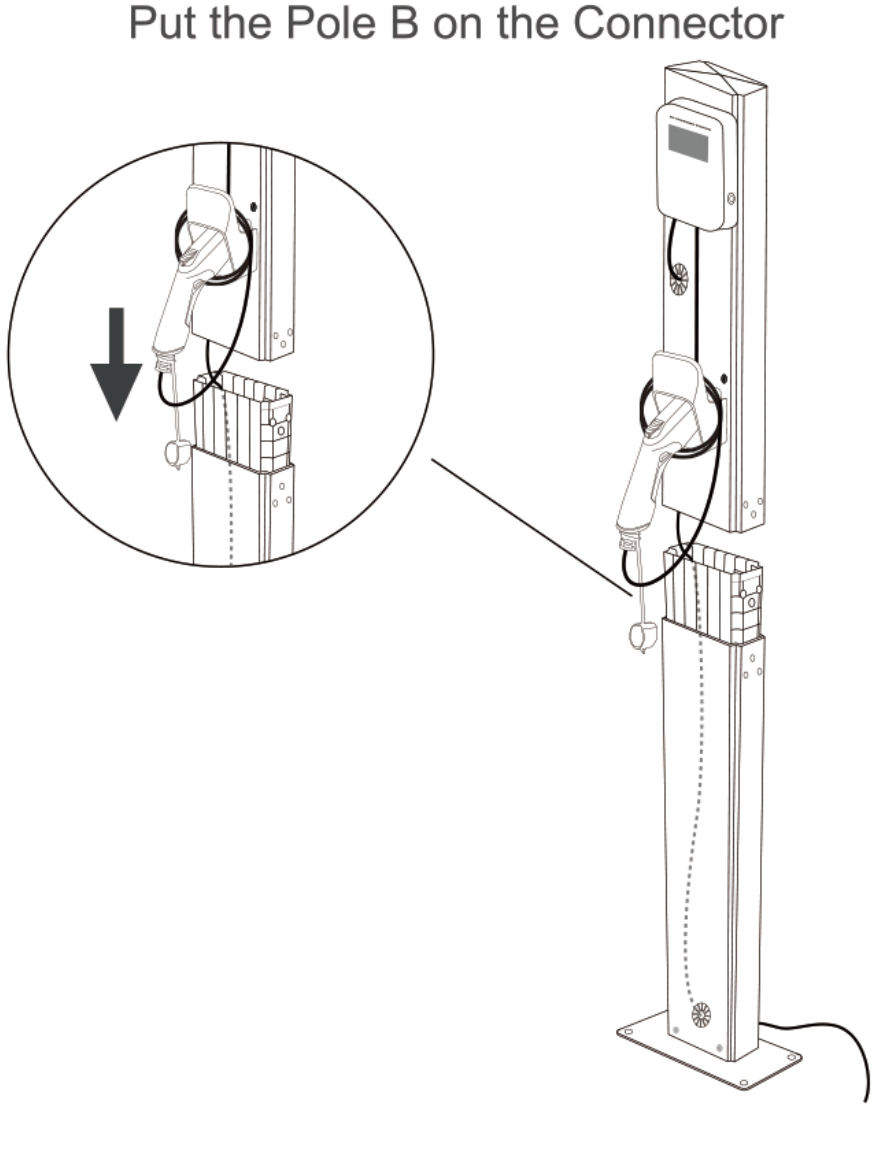

10

Fix the Pole A and the Pole B

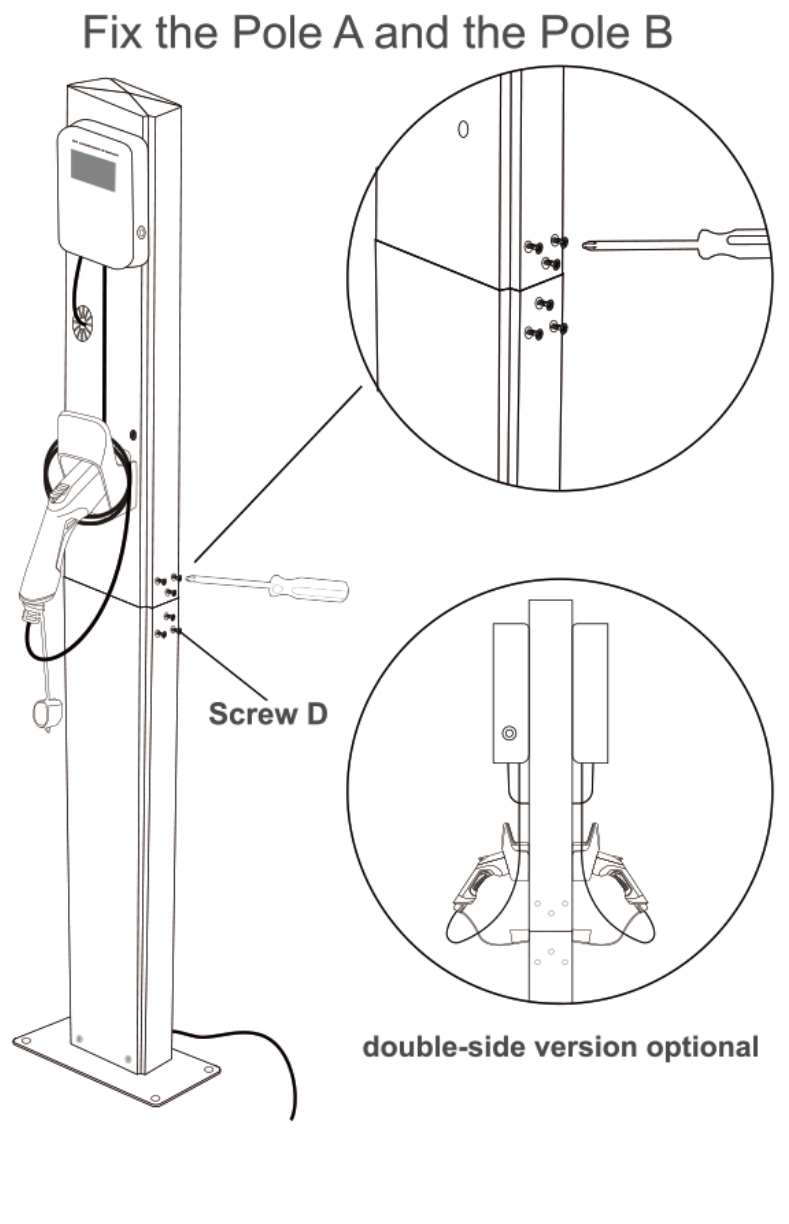
Screw D
double-side version optional

11

Mode A installation guide from page11 to page20

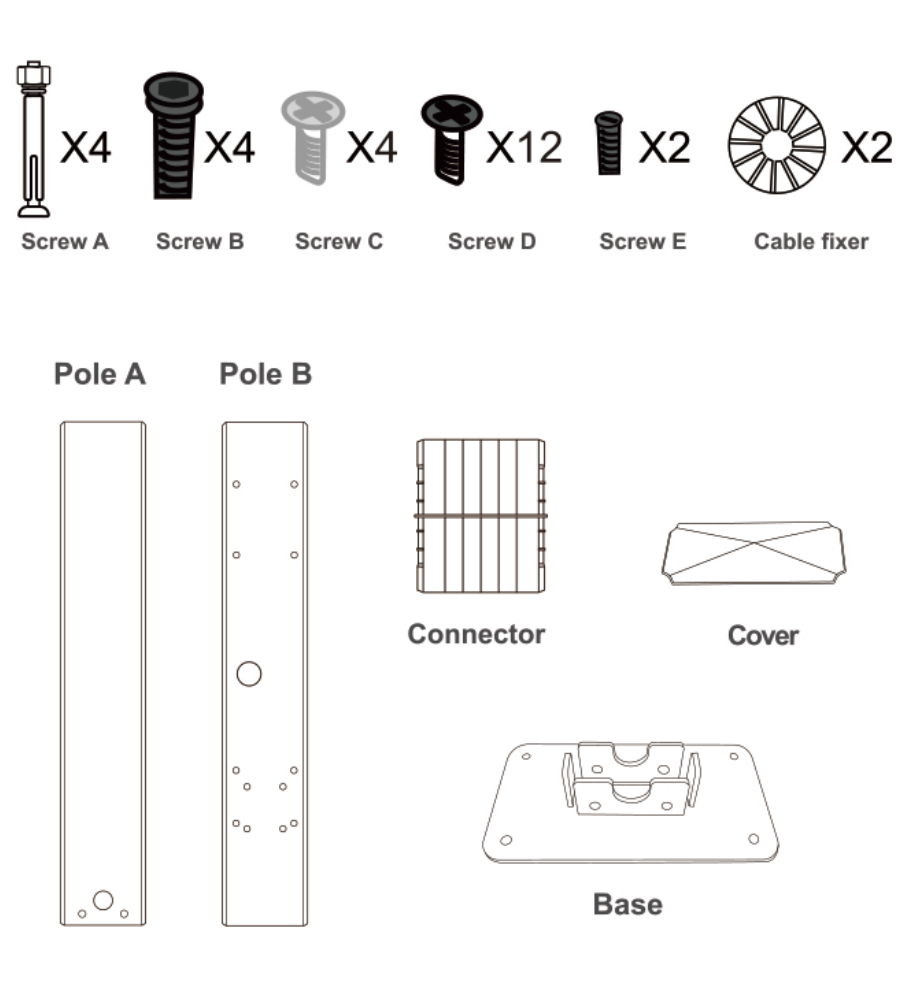
X4
Screw A
X4
Screw B
X4
Screw C
X12
Screw D
X2
Screw E
X2
Cable fixer
Pole A
Pole B
Connector
Cover
Base

12

Fix the Base on the ground

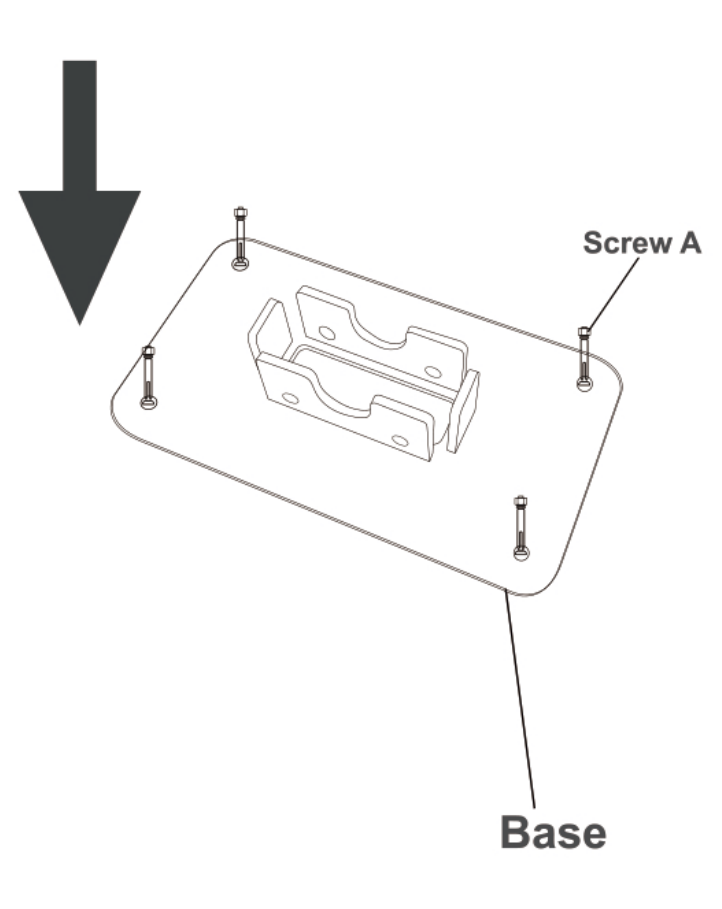
Screw A
Base

13

Fix the pole A on the Base

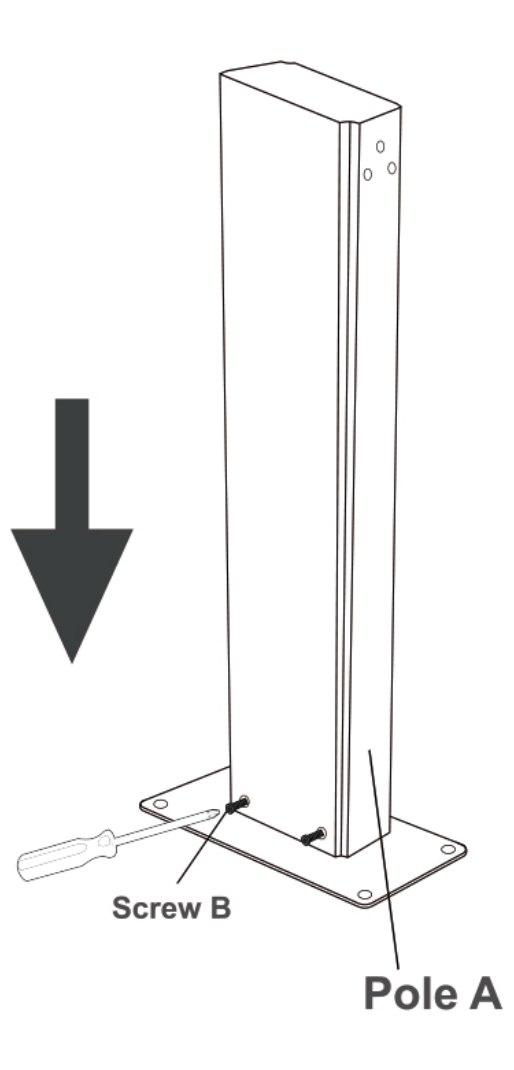
Screw B
Pole A

14

Install the charging station on the Pole B

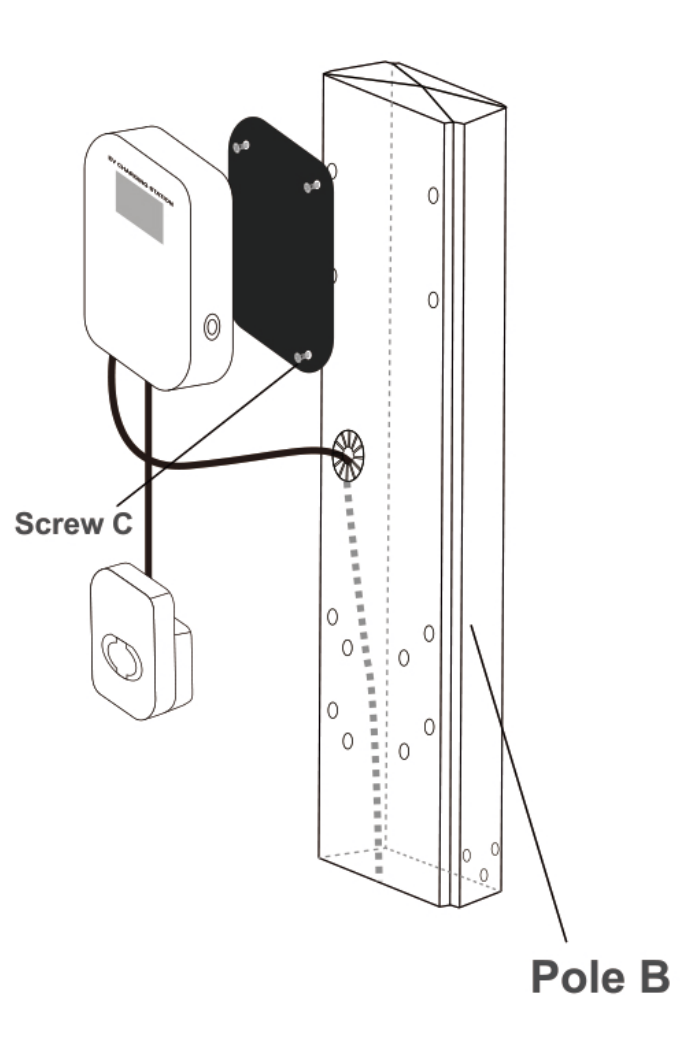
Screw C
Pole B

15

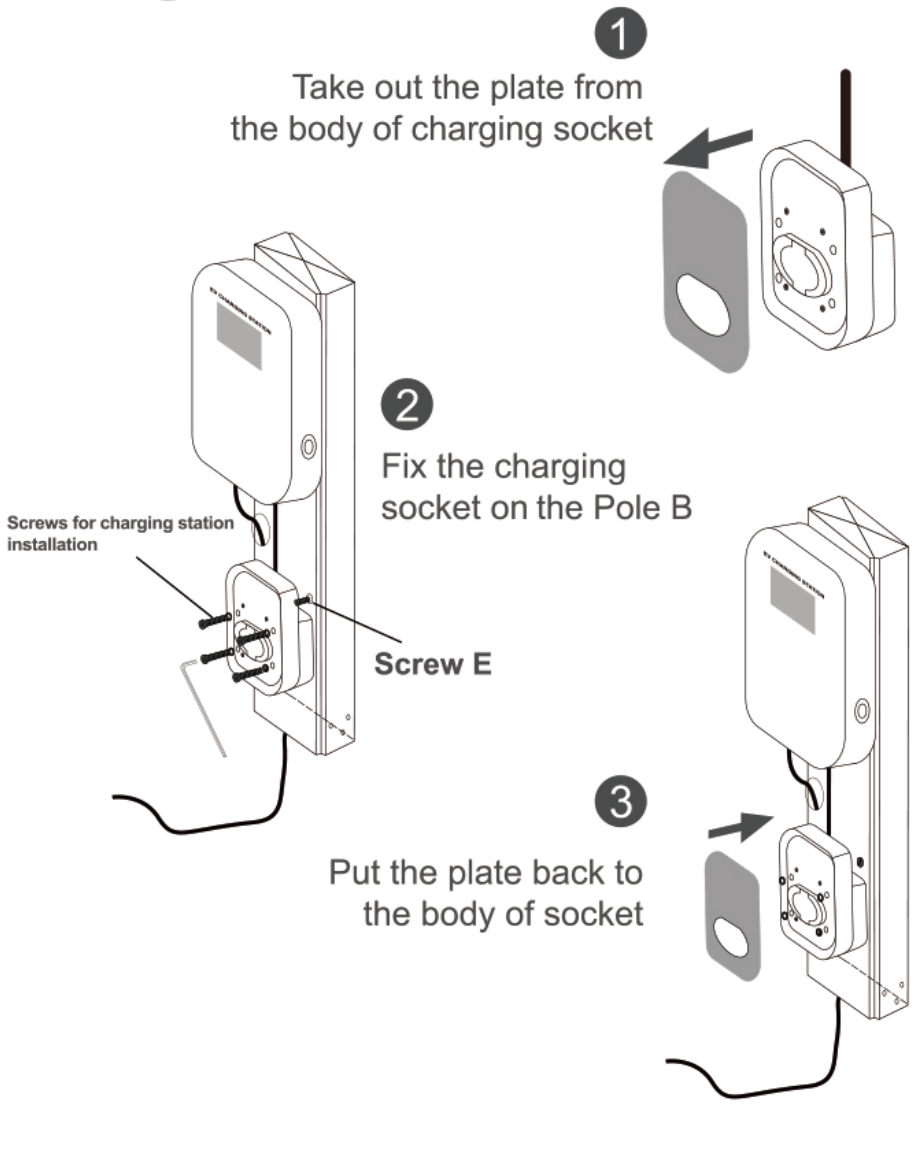
Screws for charging station installation
Screw E

① Take out the plate from the body of charging socket

② Fix the charging socket on the Pole B

③ Put the plate back to the body of socket

16

Insert the Connector to the Pole A

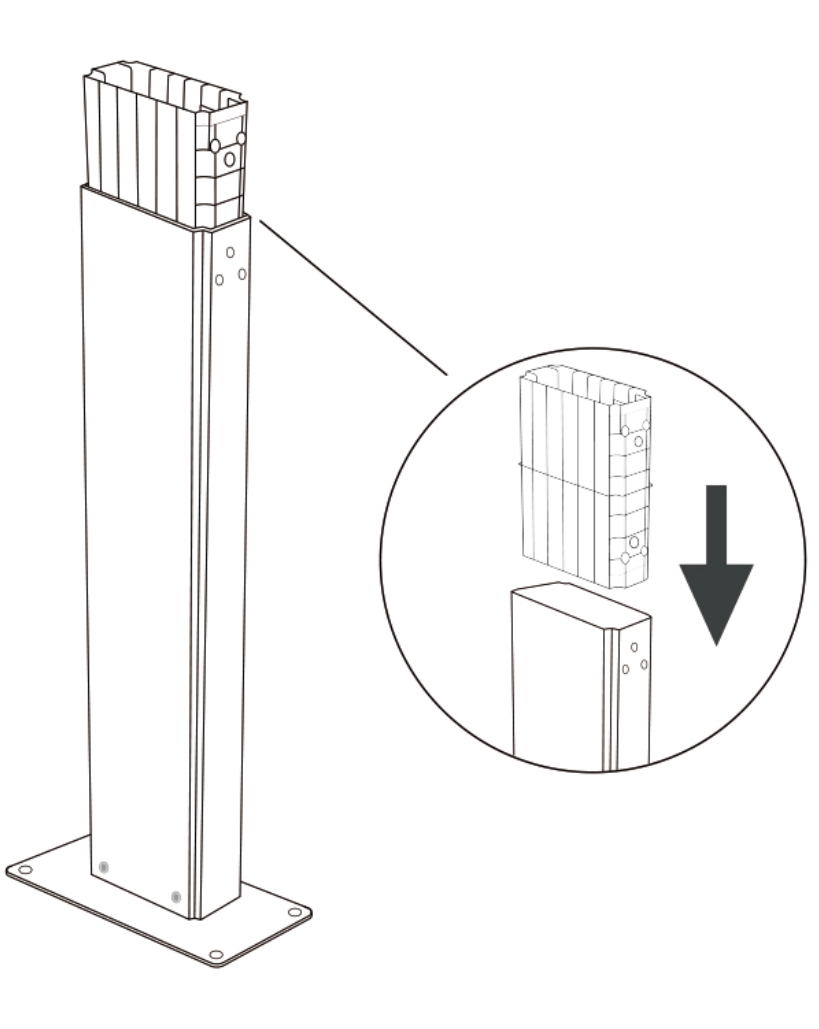

17

Put the power cord inside the Pole A

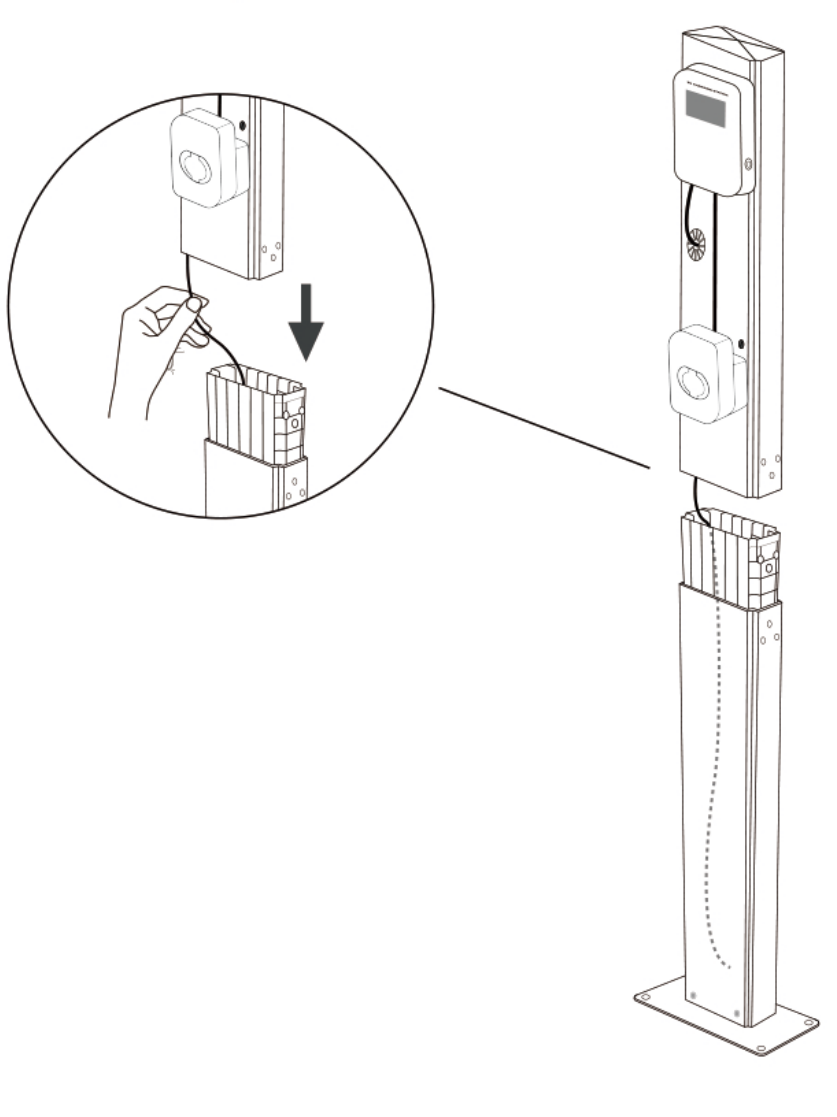

18

Pull out the power cord from the bottom hole of the Pole A

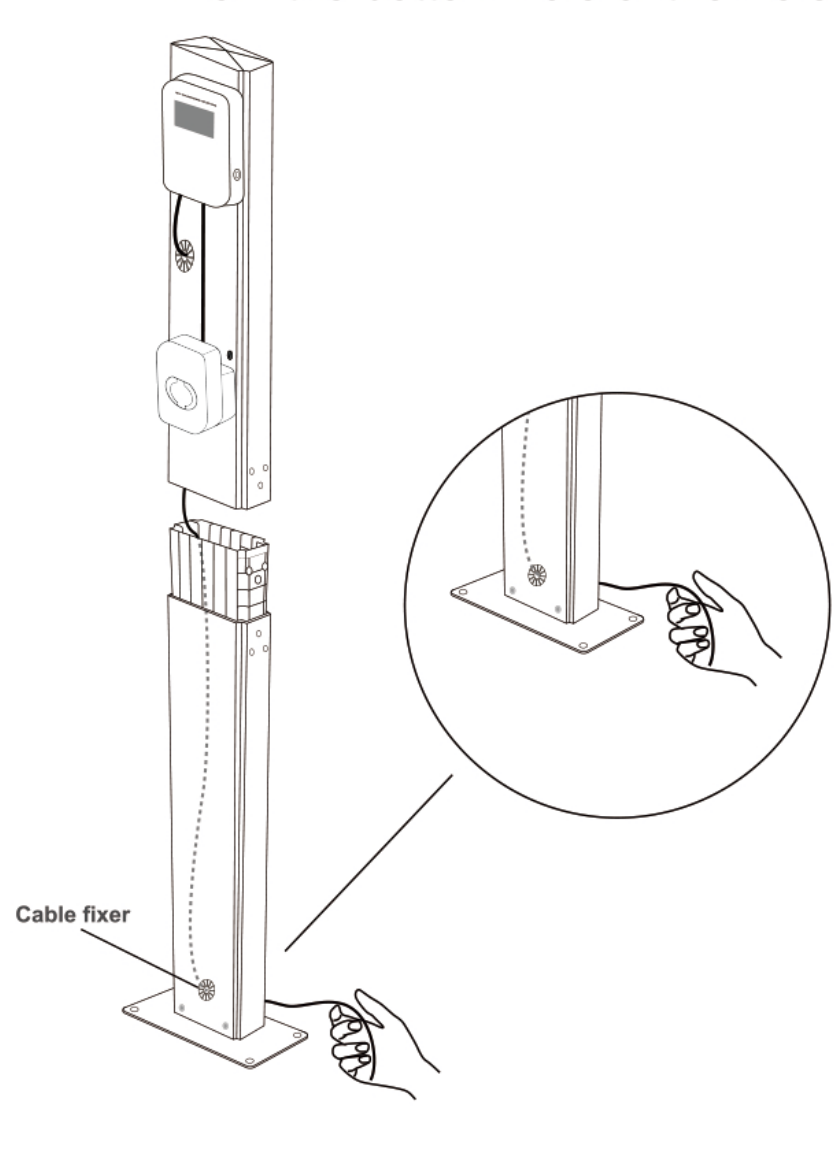
Cable fixer

19

Put the Pole B on the Connector

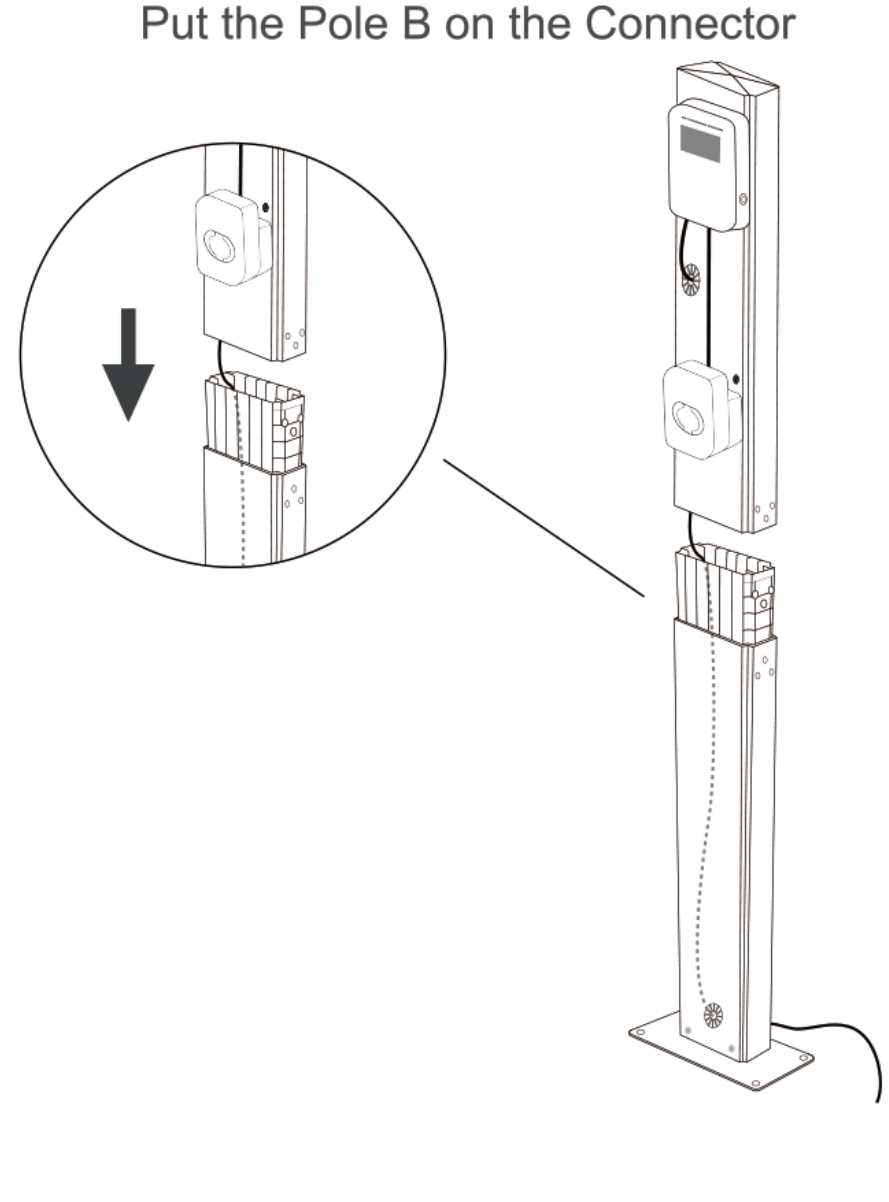

20

Fix the Pole A and the Pole B

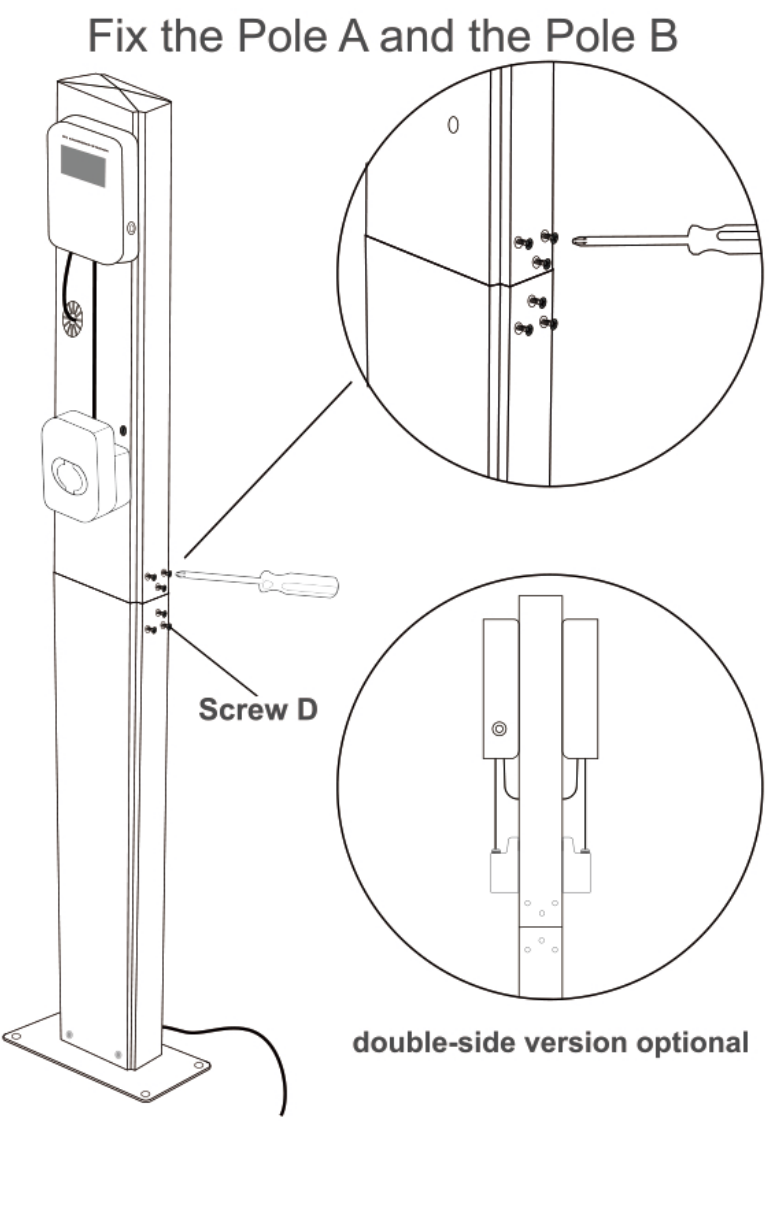
Screw D
double-side version optional