LCD/Plasma Wall Support

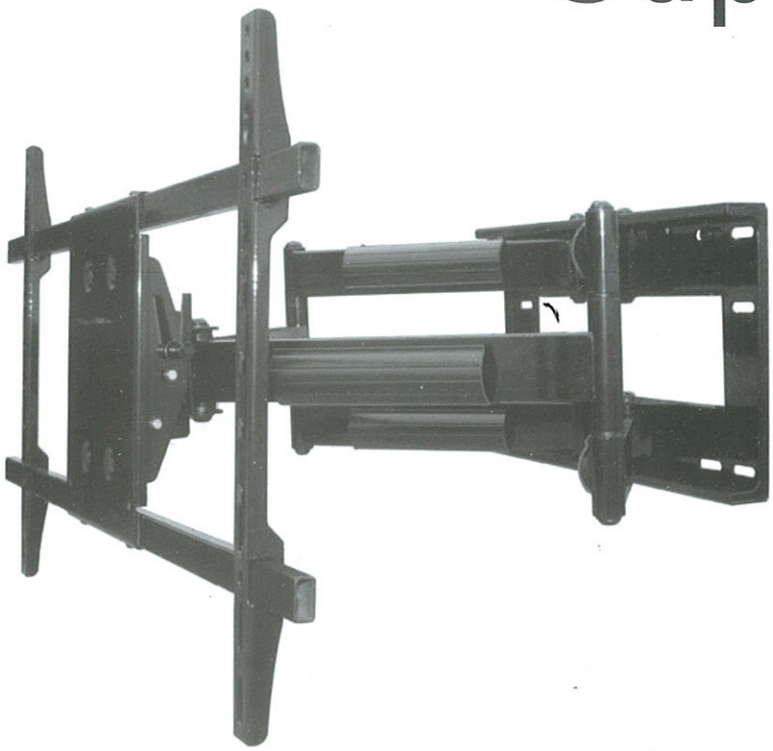

DQ Reach XXL 91CM

MOUNTING INSTRUCTIONS

1

A- (M5x16)-4pcs
B- (M6x16)-4pcs
C- (M8x16)-4pcs
D- (M8x35)-4pcs
E- (M8x12)-4pcs
F- (M6x16)-4pcs
G- (¢18x¢6.2x1.5)-8pcs
H- (¢16x¢8.2x1.5)-10pcs
I- (¢18x¢8.2x19)-4pcs
J- (M5)-1pcs
K- 4pcs
L- (M8x70)-6pcs
M- (M8x50)-6pcs

2

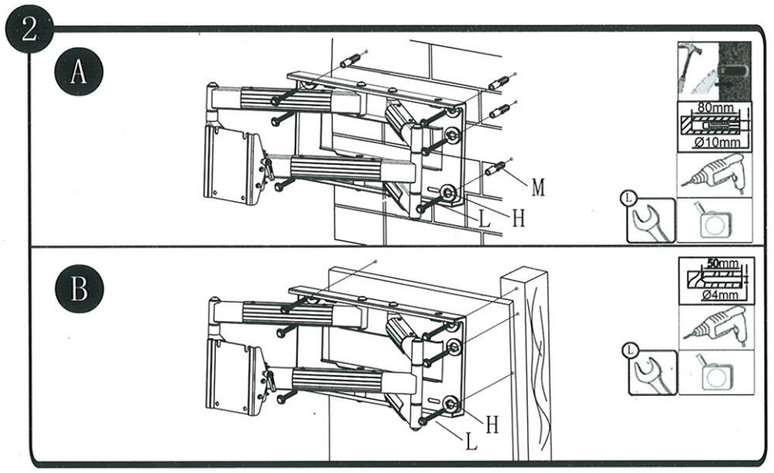

3

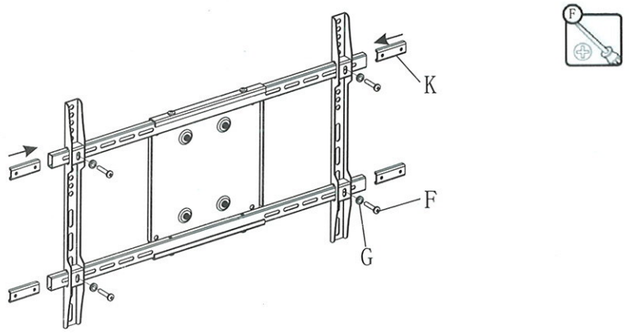

4

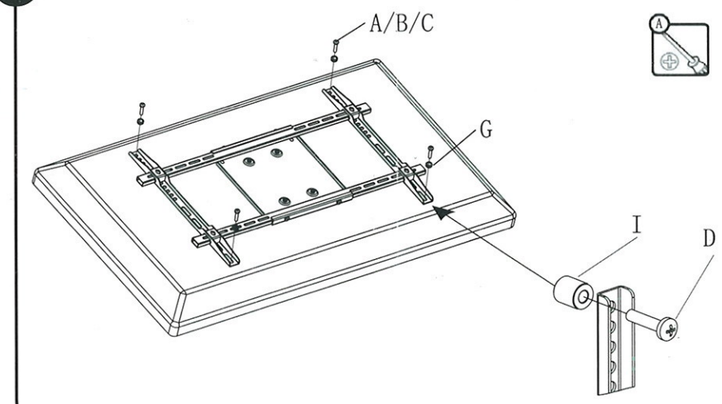

5

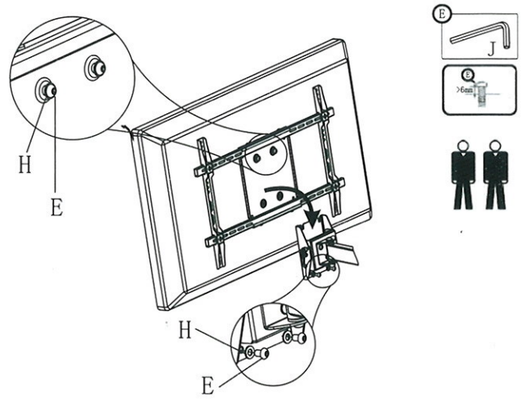

6

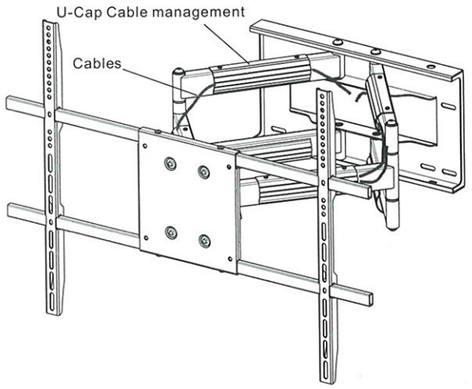
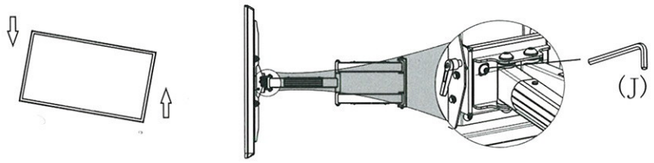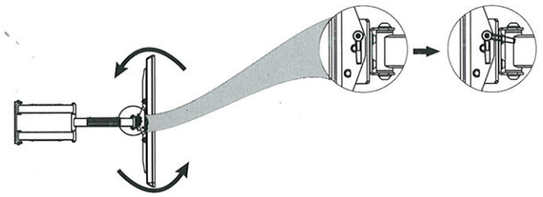
7