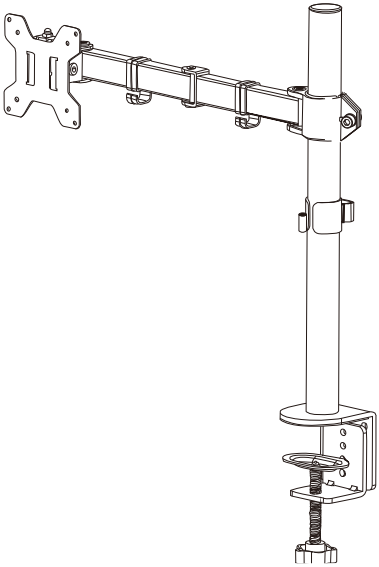

Contents

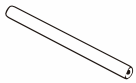

(1) Tube-a

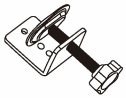

(1) Clamp-b

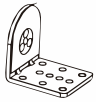

(1) Clamp-c

(1) Swivel Arm-d

(1) VESA Bracket-e

(3) M5X16-f

(2) M8X12-g

(1) Nut-h

(1) Cable Support-n1

(2) Cable Support-n2

(1) Wrench-o

(4) M4X12-q

(4) M4X30-r

(4) M8Plastic Washer-s

(3) M5X16-t

SET1

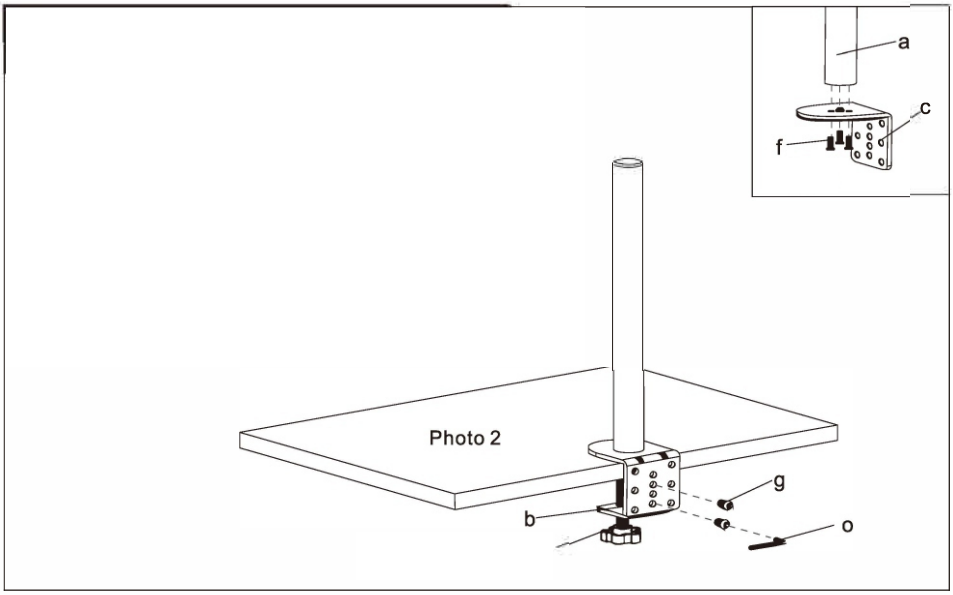

SET2

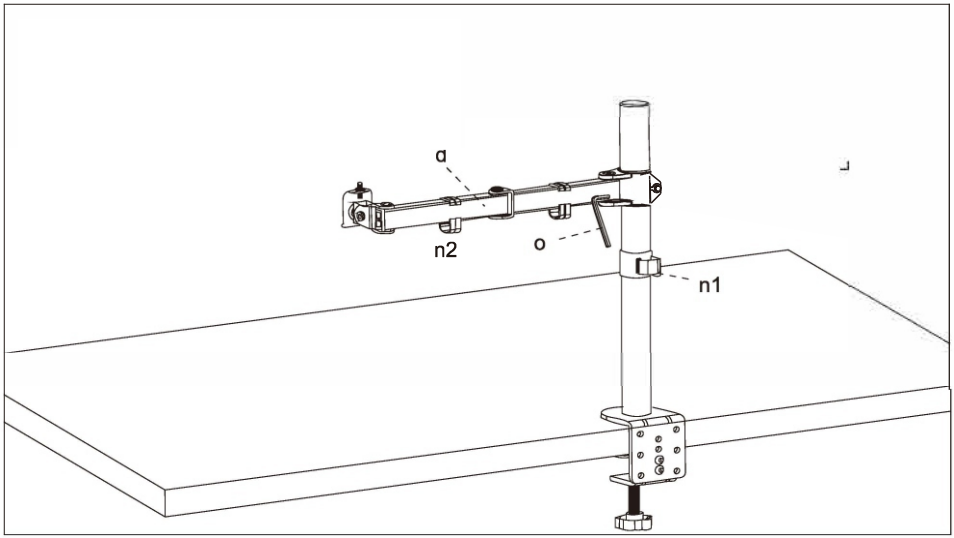

SET3

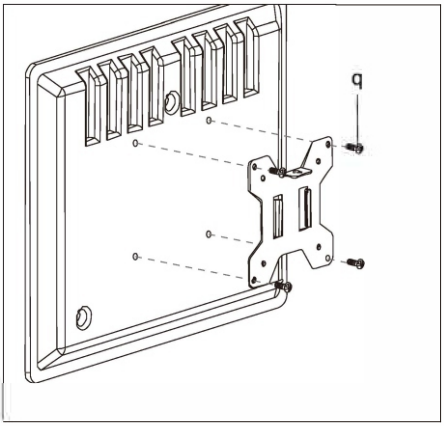

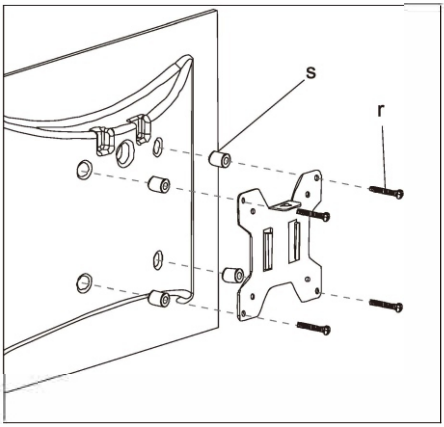

SET4

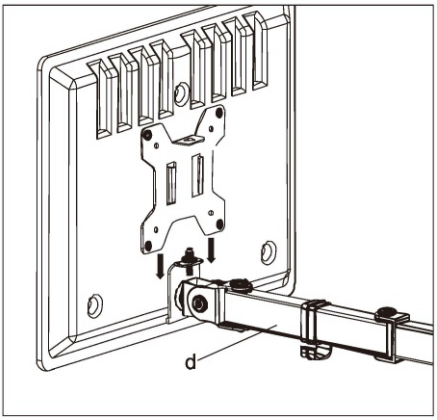

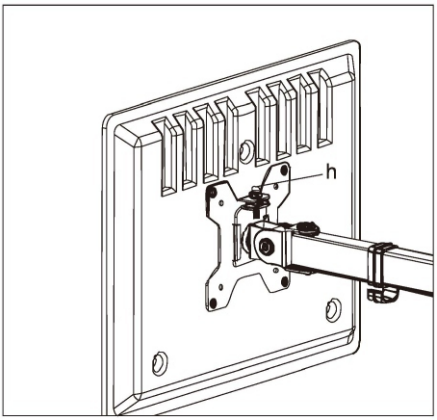

SET5

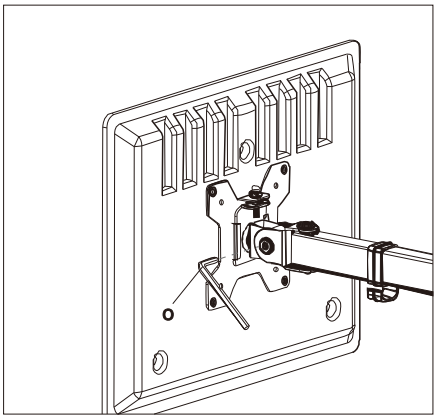

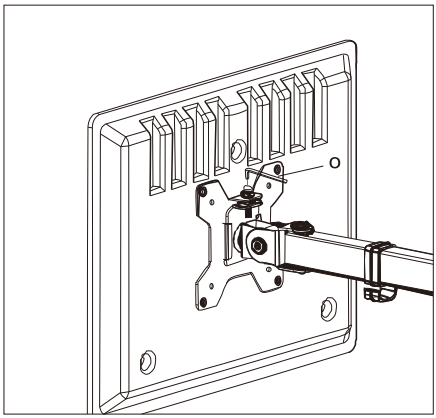
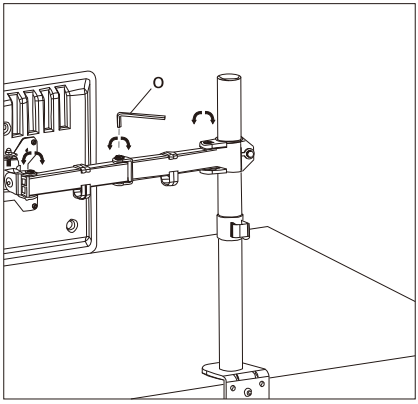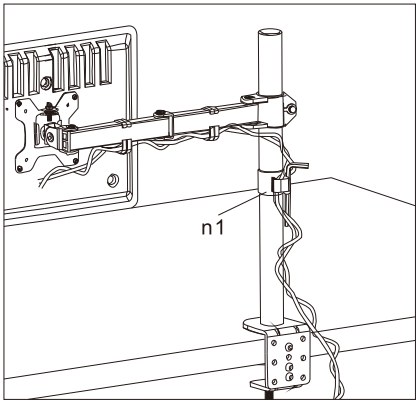
SET6