REV:05

DQ WALL·SUPPORT

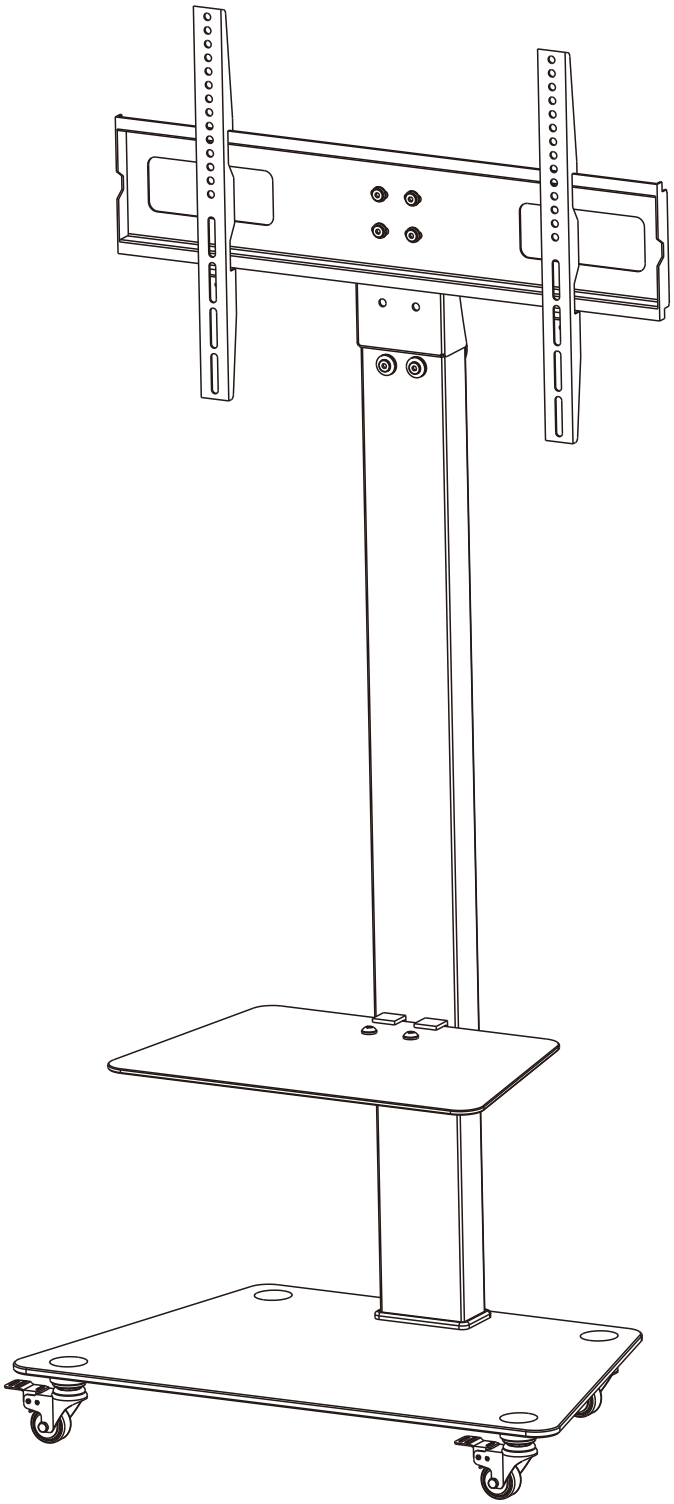

MAX VESA 600*400

65" MAX

40kg (88lbs) MAX

CAUTION: DO NOT EXCEED RATED LISTED WEIGHT. SERIOUS INJURY OR PROPERTY DAMAGE MAY OCCUR!

DQ17-1047

NOTE: Read the entire instruction manual before you start installation and assembly.

⚠ WARNING

- Please note: Images in these assembly instructions are only technical presentation of the product. Actual product design may vary minimally.

- Do not begin the installation until you have read and understood all the instructions and warnings contained in this installation sheet. If you have any questions regarding any of the instructions or warnings, please contact your local distributor.

- This product was designed to be installed and used ONLY as specified in this manual. Improper installation of this product may cause damage or serious injury.

- Make sure that the supporting surface will safely support the combined weight of the equipment and all attached hardware and components.

- Always use an assistant or mechanical lifting equipment to safely lift and position the equipment.

- Tighten screws firmly, but do not over tighten. Over tightening can cause damage the items, this greatly reduces their holding power.

- This product is intended for indoor use only. Using this product outdoors could lead to product failure and personal injury.

- By reason of large television construction types on the market, we can't adjust our screen installation materials for the wall mount for each screen type. Therefore it is possible that the screws which are numerously delivered don't fit with your TV. We ask for your understanding that we can't cover up all possibilities of many screen types.

- Make sure that before and after the installation of the screen and the mount bracket neither you nor somebody else can be injured and other objects can be damaged. In case of doubt request for help from an expert.

- Make also sure that you and optionally the co-helper or representatives have registered the mounting instructions before the installation and also the warning notice.

- This unit is not a toy and is not suitable for use by children. Children should be supervised at all times around this unit.

- To ensure continued safety, check that the unit is secure and safe to use at regular intervals (every 3 months). Take appropriate action to rectify any unstable or unsafe parts.

- This unit contains glass parts. Do not subject the glass parts to sudden shock, knocks or quick changes in temperature. The unit may fracture and will form small, sharp shards. Take extreme care when handling broken glass.

PART LIST

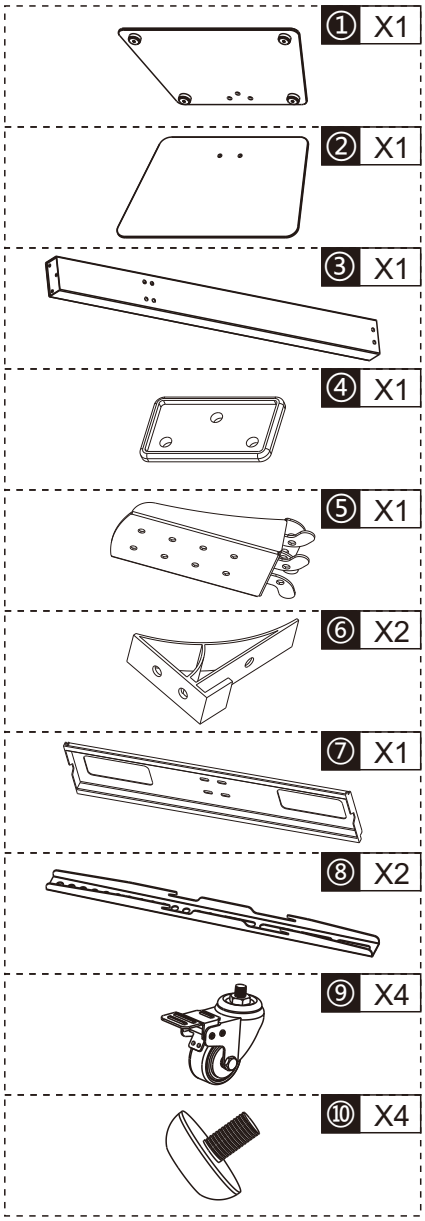

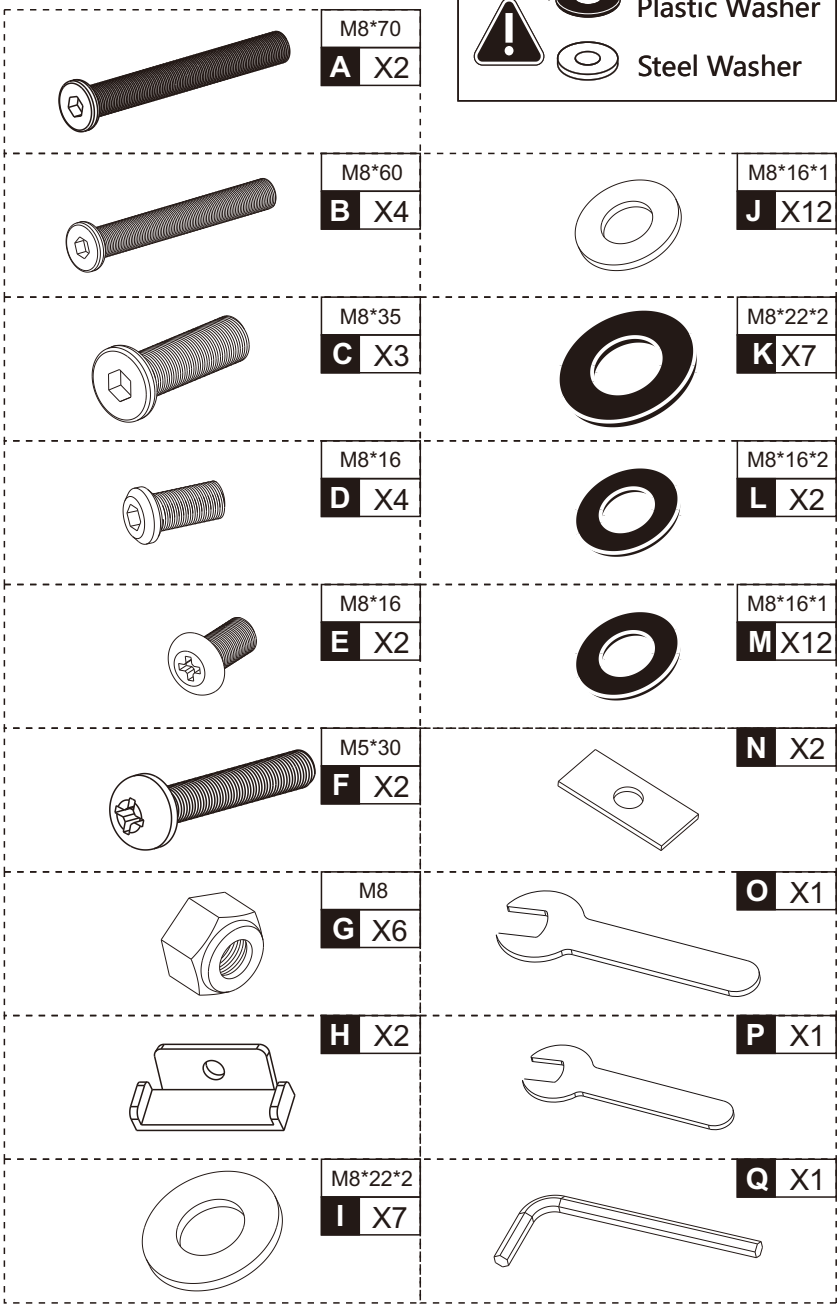

Plastic Washer

Steel Washer

FOR TV INSTALLATION

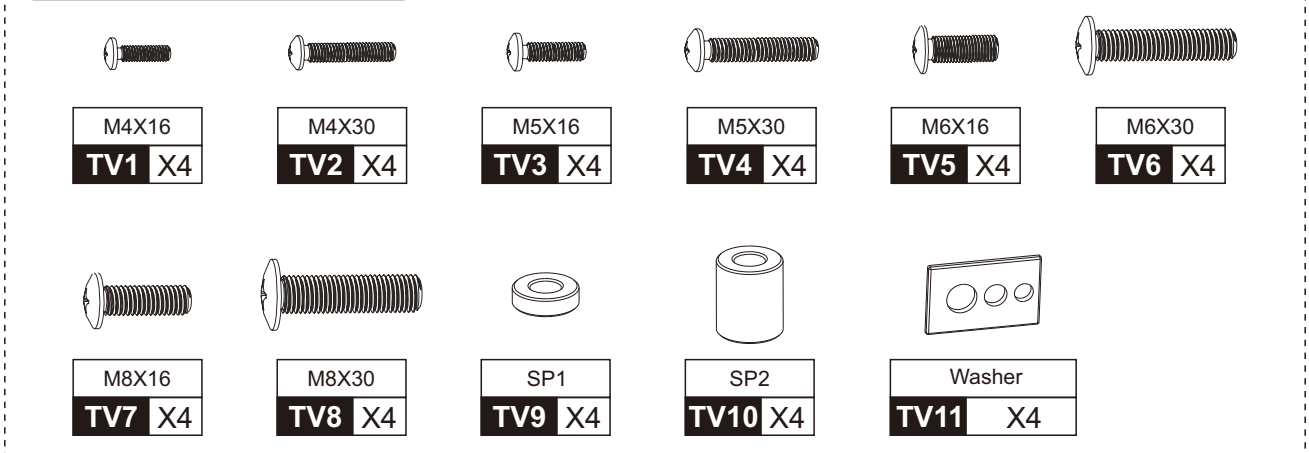

4

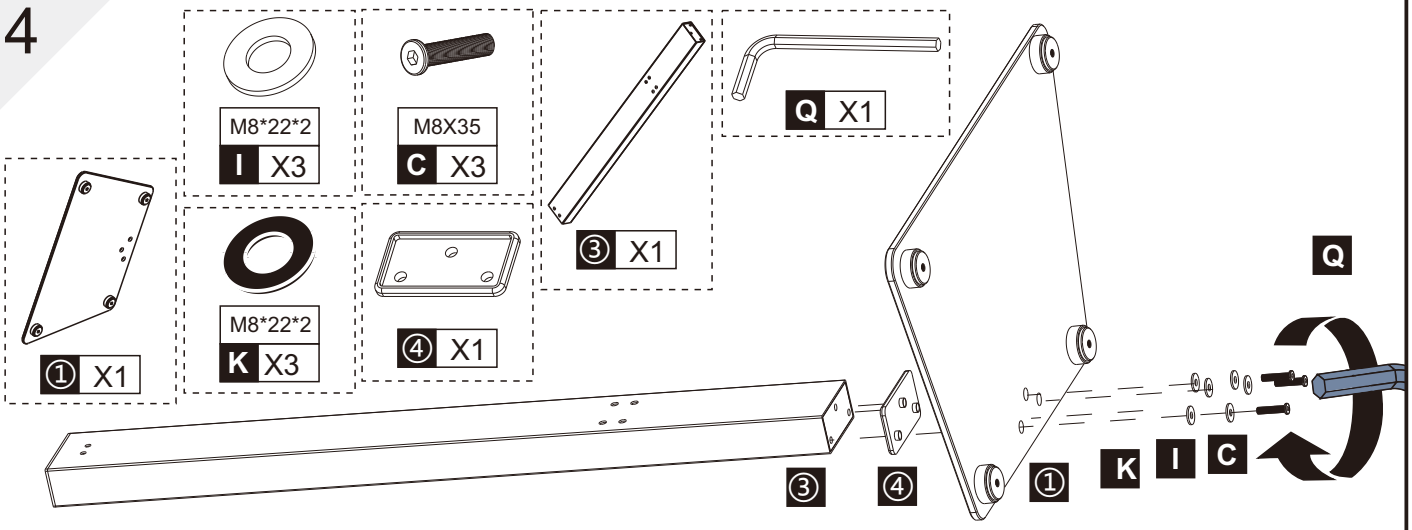

Option 1

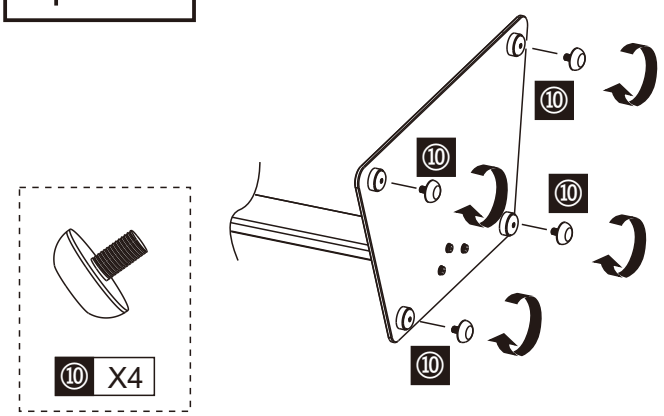

Option 2

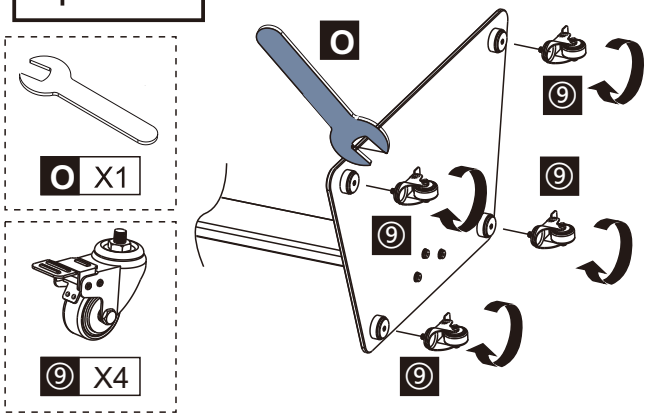

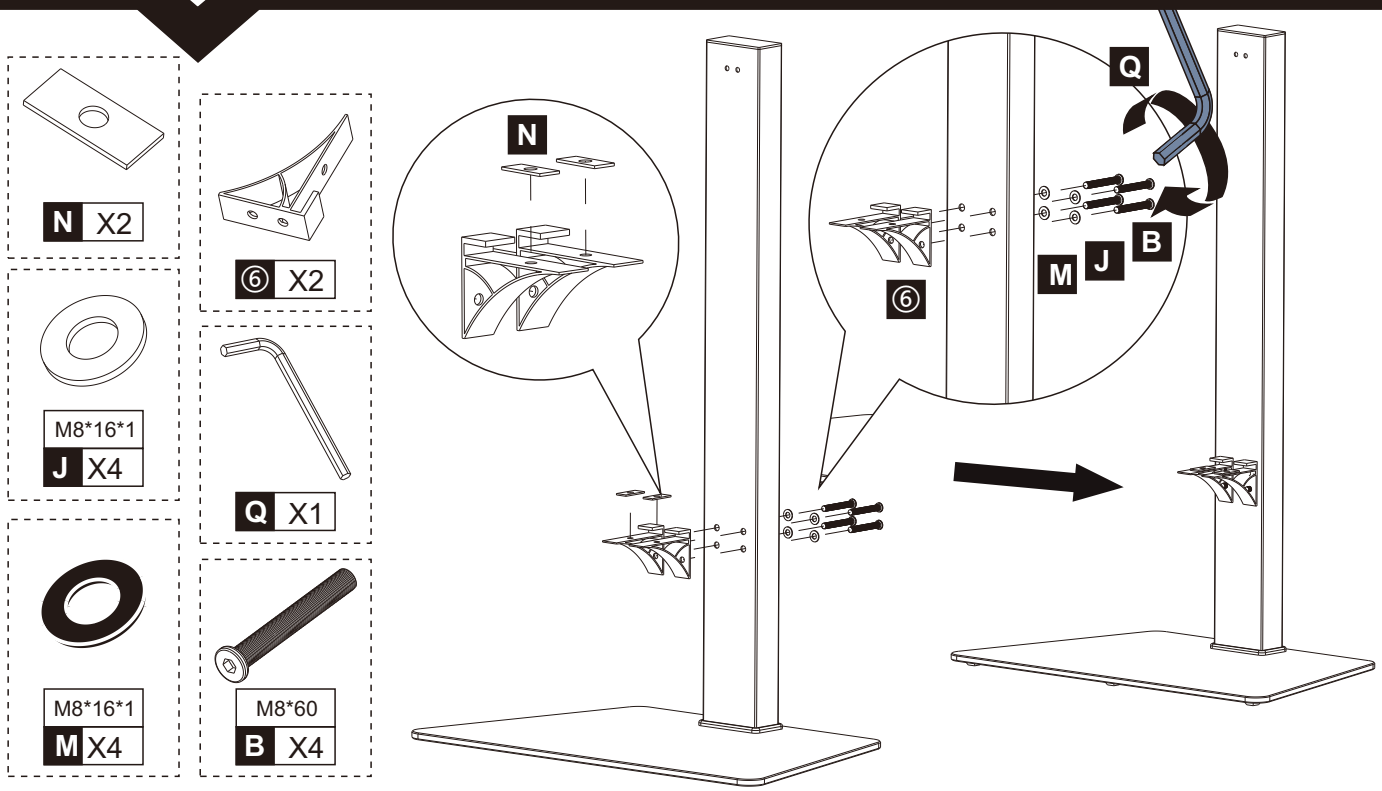

5

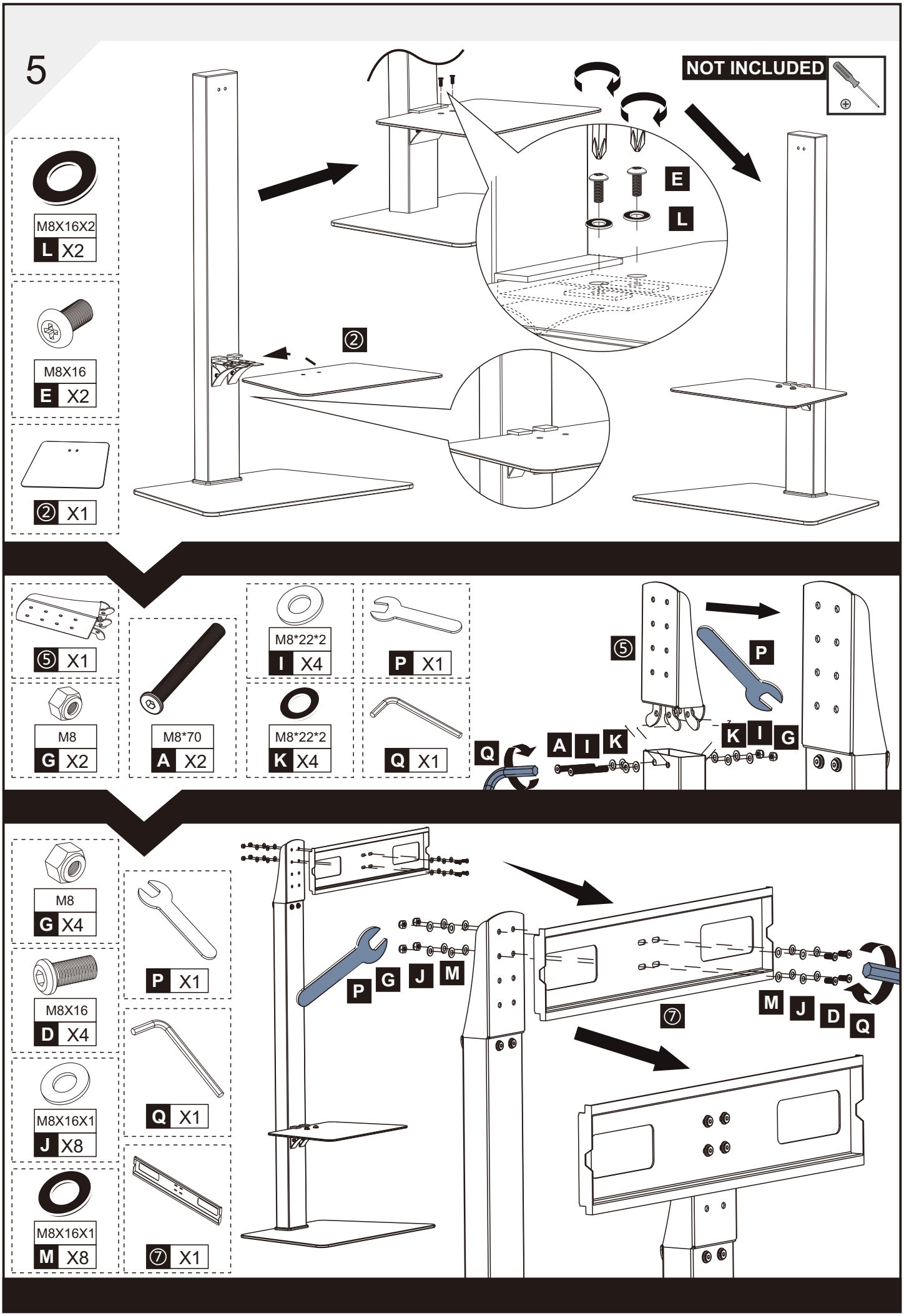
NOT INCLUDED
M8X16X2
L X2
M8X16
E X2
② X1
E
L
②
⑤ X1
M8
G X2
M8*70
A X2
M8*22*2
I X4
M8*22*2
K X4
P X1
Q X1
⑤
P
Q
A I K
K I G
M8
G X4
M8X16
D X4
M8X16X1
J X8
M8X16X1
M X8
P X1
Q X1
⑦ X1
P G J M
⑦
M J D Q

Measure the TV fixing holes Width and Height

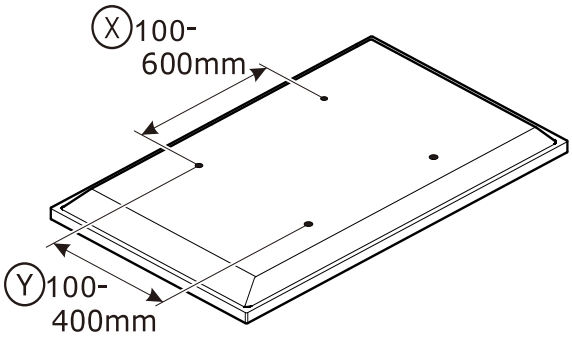

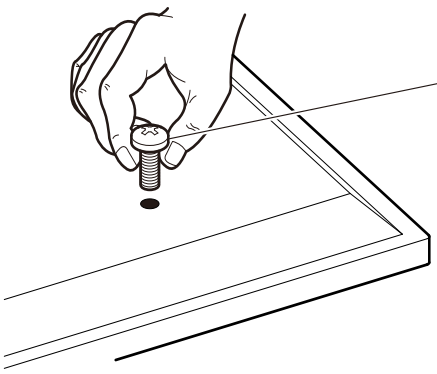

M4 = TV1-2

M5 = TV3-4

M6 = TV5-6

M8 = TV7-8

If width (X) is greater than 600mm or height (Y) greater than 400mm STOP installation now and contact the customer help line

You are provided with 4 diameters of TV fixing screws, **M4**, **M5**, **M6** and **M8**. Determine the screw diameter that fits.

Spacers | **SP1** | **SP2**

For TVs with irregular/obstructed back

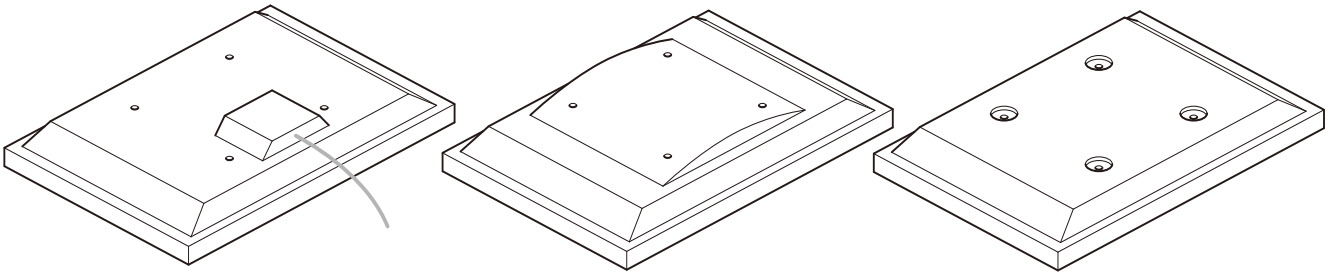

No Spacers

For TVs with flat/unobstructed back

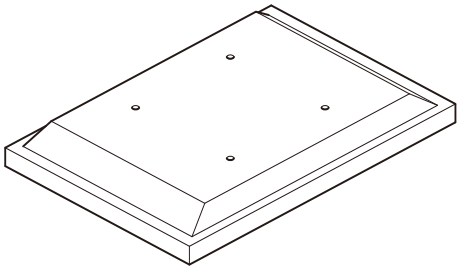

WARNING

Please keep for future reference.

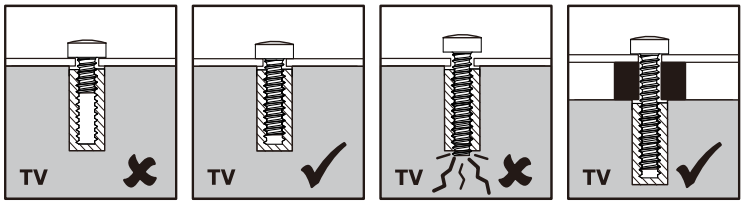

NOT INCLUDED

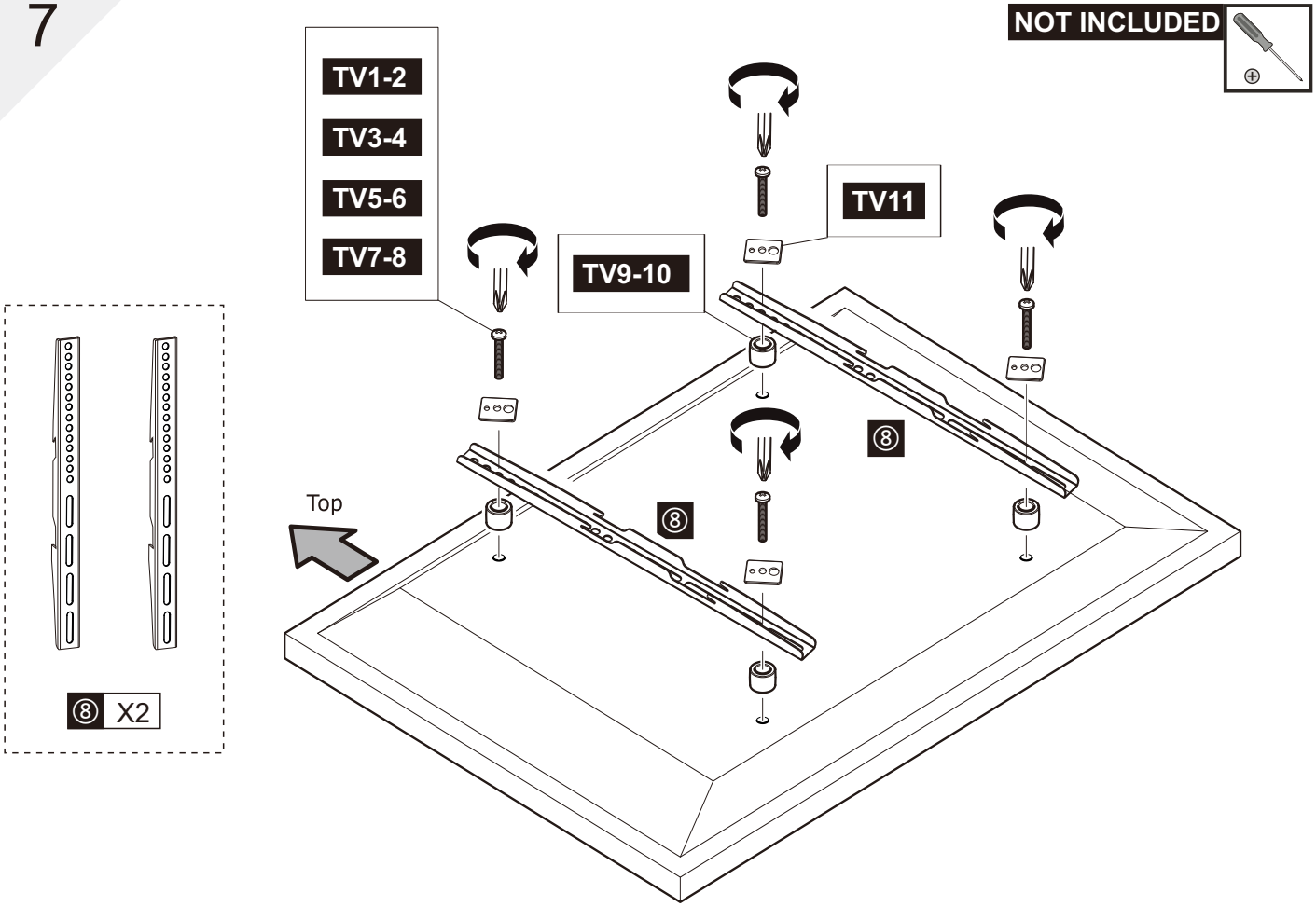

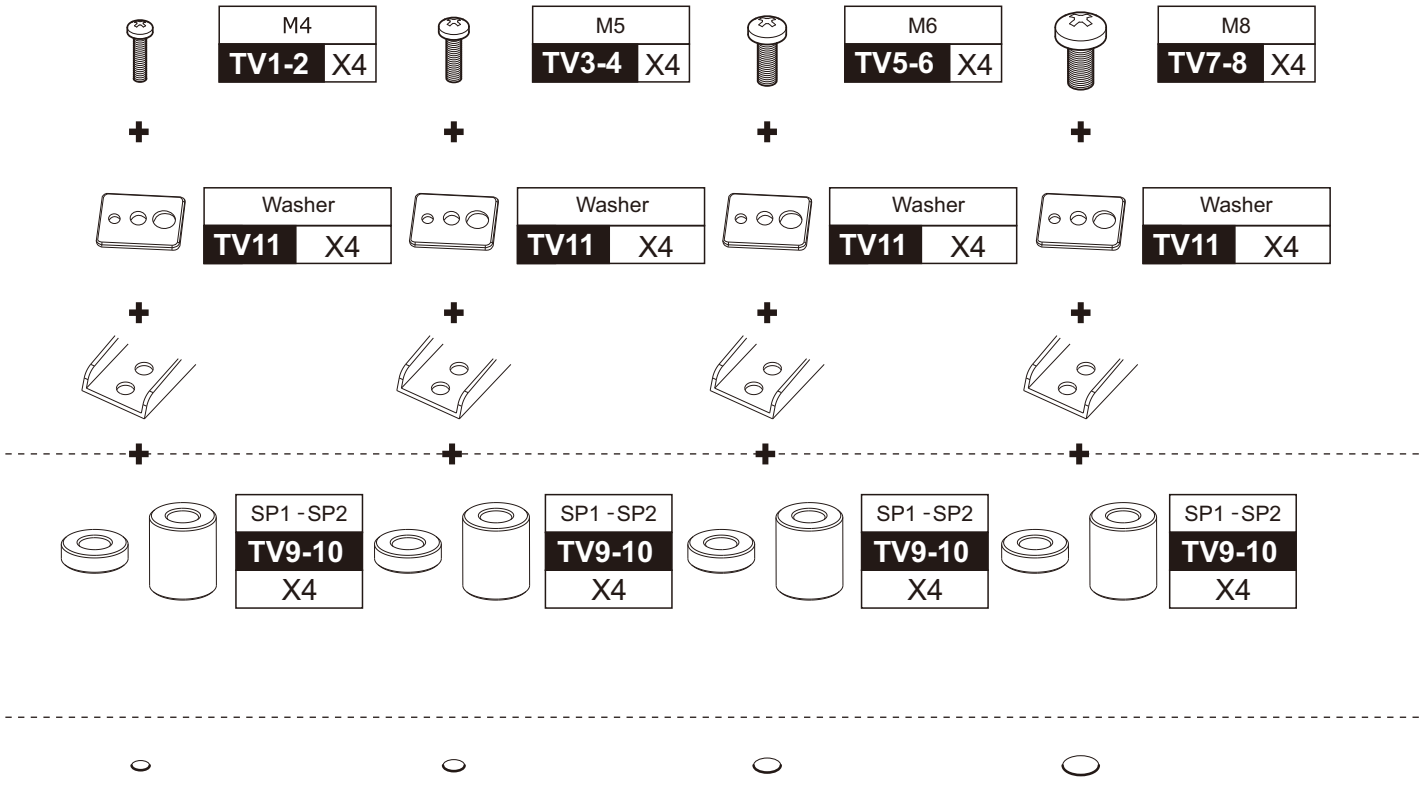

Attach the bracket to the back of your TV using suitable screw, reducer and spacer combinations.

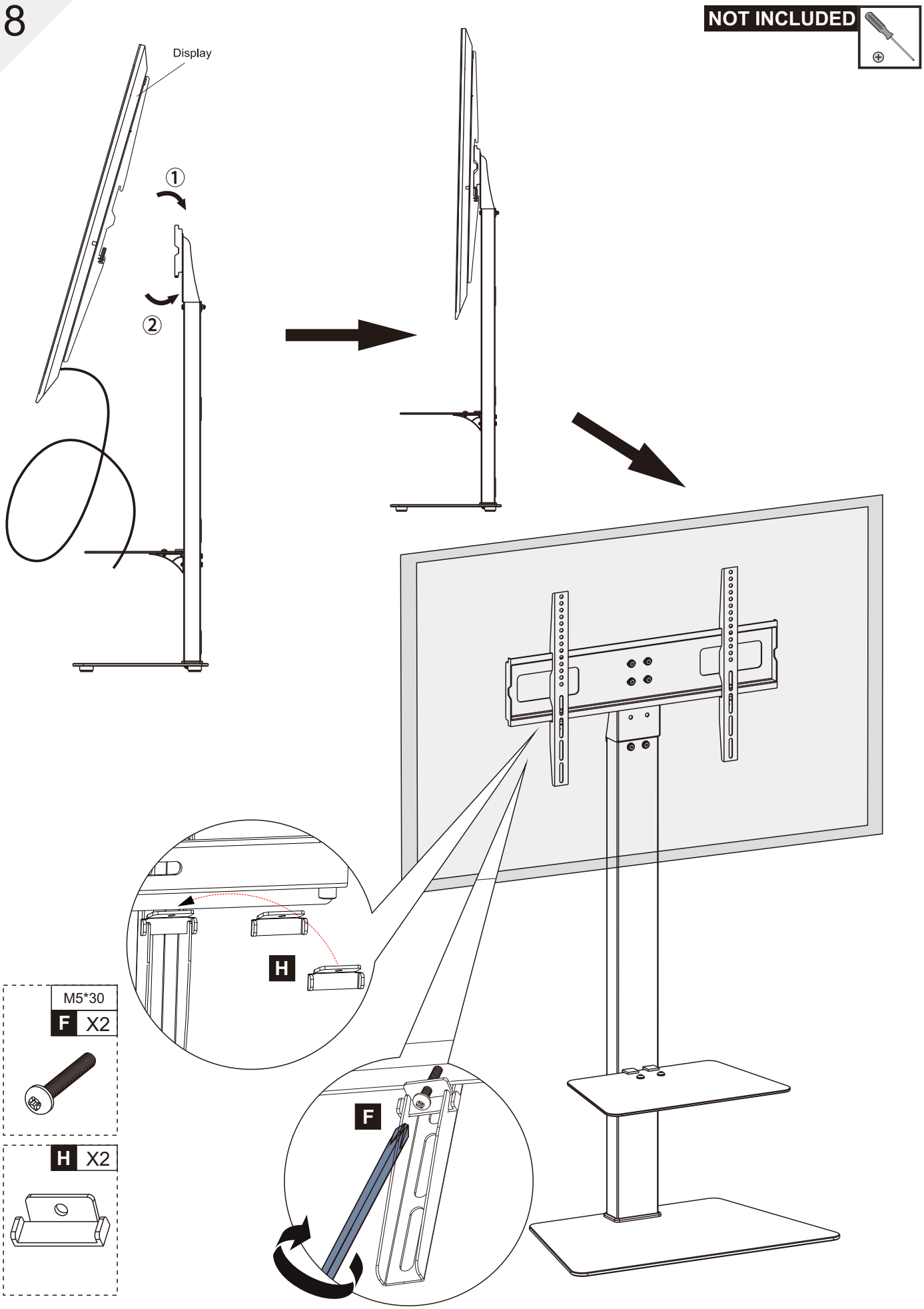
NOT INCLUDED
Display
①
②
H
F
M5*30
F X2
H X2