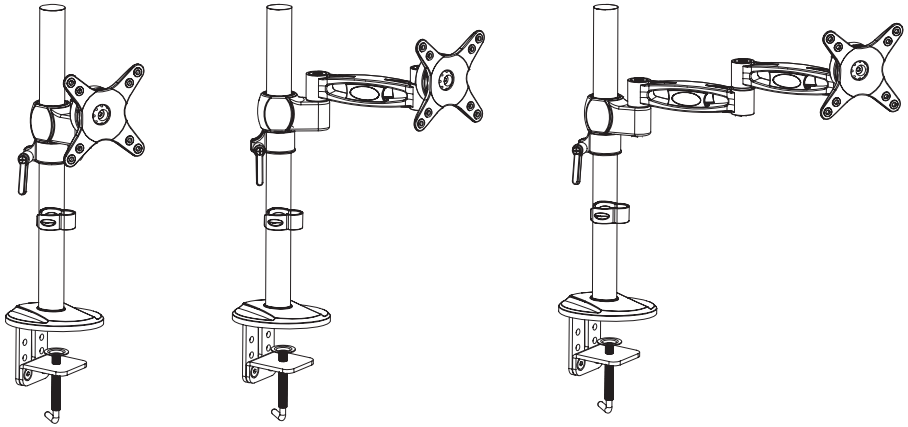

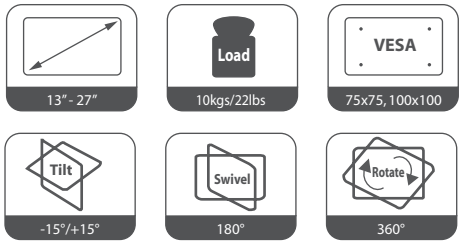
13" - 27"
Load
10kgs/22lbs
VESA
75x75,100x100
Tilt
-15°/+15°
Swivel
180°
Rotate
360°

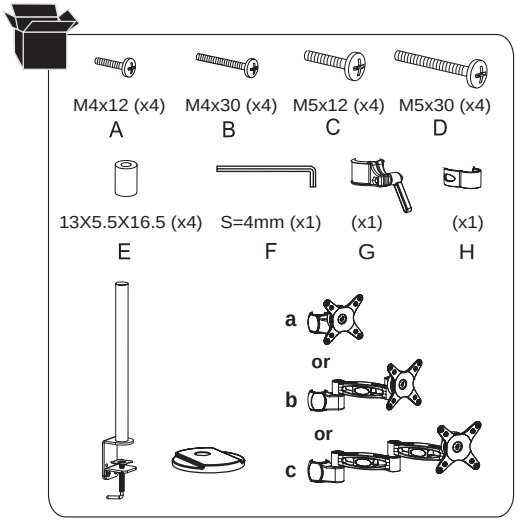
M4x12 (x4)
A
M4x30 (x4)
B
M5x12 (x4)
C
M5x30 (x4)
D
13X5.5X16.5 (x4)
E
S=4mm (x1)
F
(x1)
G
(x1)
H
a
or
b
or
c

1

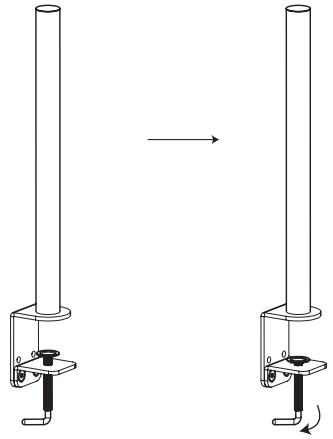

2

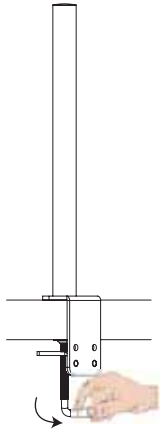

3

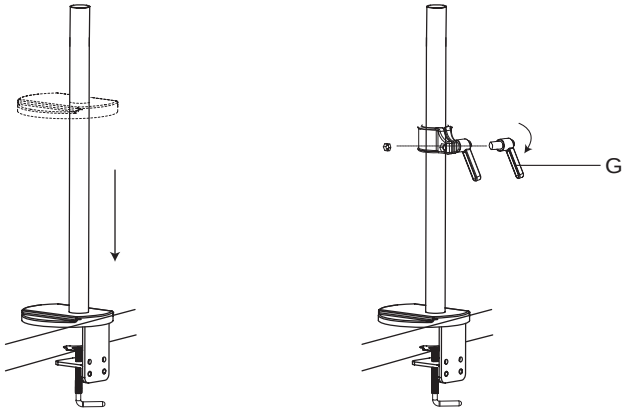
G

4

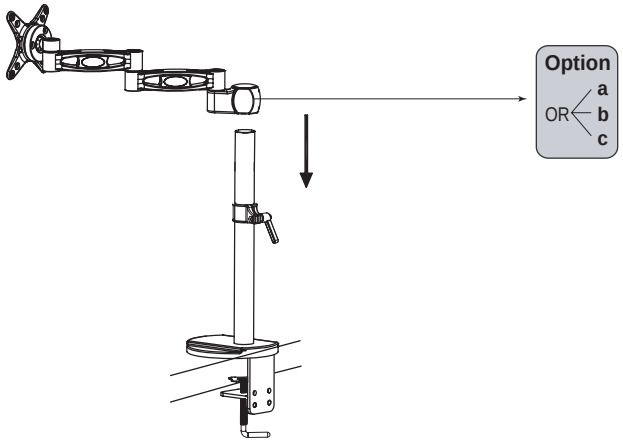
Option
a
OR
b
c

5

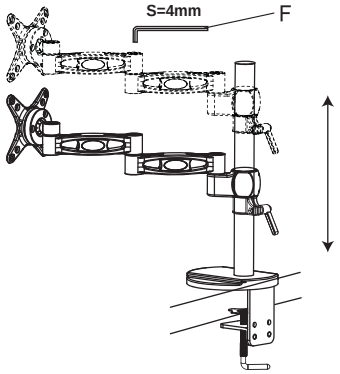

6

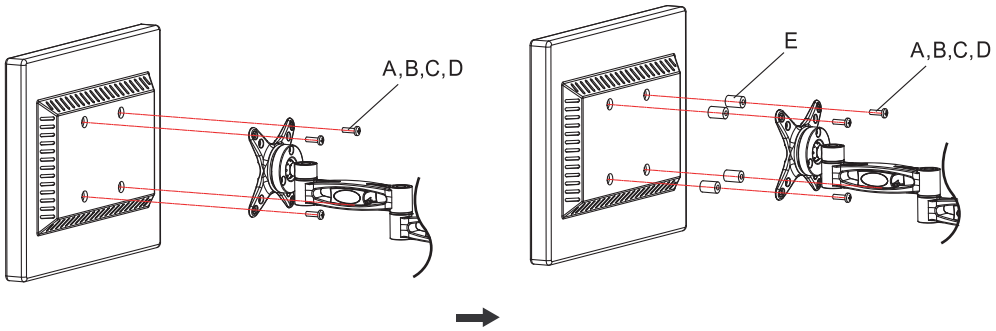
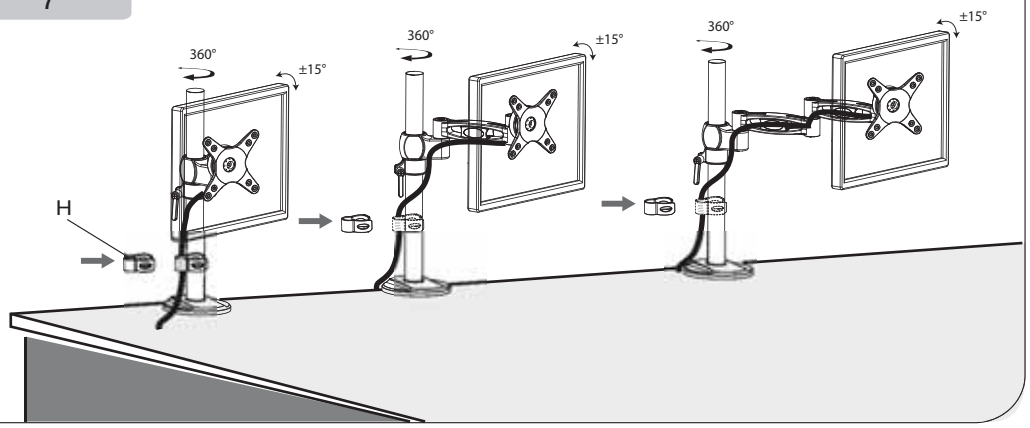
7