Qubino

Smart Meter

SKU: GOAEZMNHTD1

Quickstart

This is a **secure Smart Meter** for **Europe**. To run this device please connect it to your mains power supply. To add this device to your network execute t
following action:
- press service button S for more than 2 second

Important safety information

Please read this manual carefully. Failure to follow the recommendations in this manual may be dangerous or may violate the law. The manufacturer, impor
distributor and seller shall not be liable for any loss or damage resulting from failure to comply with the instructions in this manual or any other material. Use
equipment only for its intended purpose. Follow the disposal instructions. Do not dispose of electronic equipment or batteries in a fire or near open heat sou

What is Z-Wave?

Z-Wave is the international wireless protocol for communication in the Smart Home. This device is suited for use in the region mentioned in the Quickstart s

Z-Wave ensures a reliable communication by reconfirming every message (**two-way communication**) and every mains powered node can act as a repeater for other nodes (**meshed network**) in case the receiver is not in direct wireless range of the transmitter.

This device and every other certified Z-Wave device can be **used together with any other certified Z-Wave device regardless of brand and origin** as long as both are suited for the same frequency range.

If a device supports **secure communication** it will communicate with other devices secure as long as this device provides the same or a higher level of security. Otherwise it will automatically turn into a lower level of security to maintain backward compatibility.

For more information about Z-Wave technology, devices, white papers etc. please refer to www.z-wave.info.

Product Description

This Z-Wave module is used for energy measurements in single-phase electrical power network and can be used in residential, industrial and utility applica
Meters measure energy directly in 2-wire networks according to the principle of fast sampling of voltage and current signals. A built-in microprocessor calcu
energy, power and power factor from the measured signals. The module can be controlled through Z-wave network and it acts as repeater in order to impro
and stability of Z-wave network. It is designed to be mounted on DIN rail.

Prepare for Installation / Reset

Please read the user manual before installing the product.

In order to include (add) a Z-Wave device to a network it **must be in factory default state.** Please make sure to reset the device into factory default. You c
by performing an Exclusion operation as described below in the manual. Every Z-Wave controller is able to perform this operation however it is recommenc
the primary controller of the previous network to make sure the very device is excluded properly from this network.

Reset to factory default

This device also allows to be reset without any involvement of a Z-Wave controller. This procedure should only be used when the primary controller is inope

- press service button S for more than 6 second

Safety Warning for Mains Powered Devices

ATTENTION: only authorized technicians under consideration of the country-specific installation guidelines/norms may do works with mains power. Prior to
assembly of the product, the voltage network has to be switched off and ensured against re-switching.

Installation

- To prevent electrical shock and/or equipment damage, disconnect electrical power: remove main fuse or put on OFF position a main disconnection switch breaker if it is compliant to standard IEC947-2), before installation or any servicing.
- Make sure, that no voltage is present in the installation.
- Prevent the disconnecting device from being switched on accidentally.
- Connect the module according to electrical diagram.
- Locate the antenna far from metal elements (as far as possible).
- Do not shorten the antenna

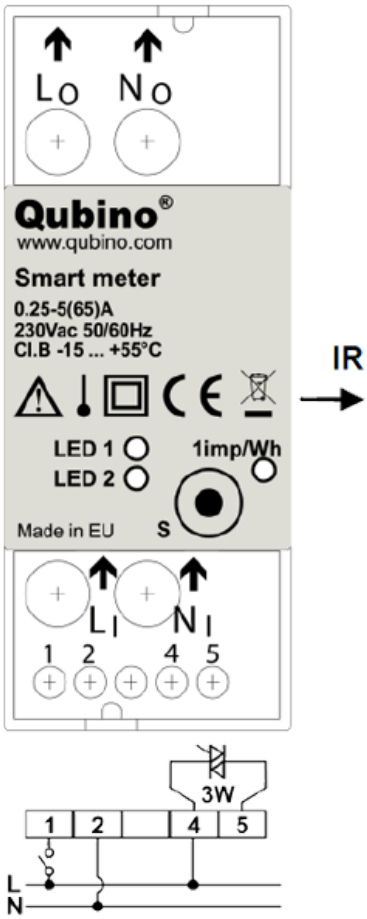

Notes for the diagram:

LI Live input
NI Neutral input
Lo Live output
No Neutral output
1 Input for IR external relay/Ext. relay
2 Neutral lead for input
4 Live lead for External relay output
5 Output for External relay (max. 3W)
S Service button (used to add or remove module from the Z-Wave network).
LED1 Green - Power on (solid) / no ID (blinking slow 1s) / Inc./Exc. mode (blinking fast 0,5s)
LED2 Yellow on – output on (any) / Yellow off – outputs off (both)
IR Output for IR external relay
1imp/Wh Red - Pulse rate (On – no load indication)

External relays

It is possible to connect two external relay to Smart Meter module. One controlled by built-in optical (IR) communication port on the side, second controlled on terminal 5.

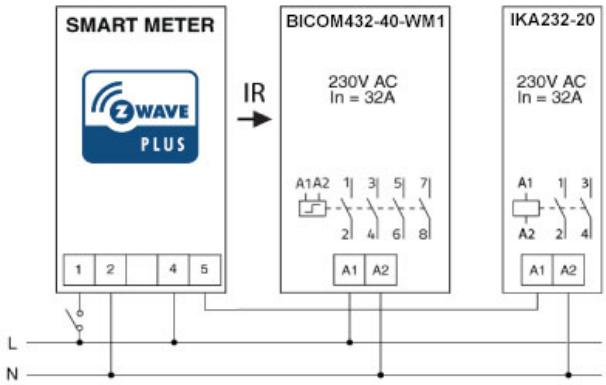

Inclusion/Exclusion

On factory default the device does not belong to any Z-Wave network. The device needs to be **added to an existing wireless network** to communicate wi devices of this network. This process is called **Inclusion**.

Devices can also be removed from a network. This process is called **Exclusion**. Both processes are initiated by the primary controller of the Z-Wave netwo controller is turned into exclusion respective inclusion mode. Inclusion and Exclusion is then performed doing a special manual action right on the device.

Inclusion

- press service button S for more than 2 second

Exclusion

- press service button S for more than 2 second (not all Parameters are reset)

Auto-Inclusion

Beside the standard inclusion this devices supports the so called **auto inclusion**. Right after powering up the device remains in inclusion state and can be (any) gateway without further actions on the device itself. The auto inclusion mode will time out after some time.

Product Usage

LED SIGNALIZATION FOR INCLUSION/EXCLUSION

LED1 (Green)
- LED is ON = Power ON, module is included
- LED is 1s OFF, 1s ON = Power ON, module is excluded

LED2 (Yellow)
a. External IR relay enabled only
- LED is ON = External IR relay is turned ON
- LED is OFF = External IR relay is turned OFF
- LED is 0.5s OFF, 0.5s ON = IR communication error

b. External TRIAC relay enabled only
- LED is ON = External IR relay is turned ON
- LED is OFF = External IR relay is turned OFF

c. Both TRIAC and IR enabled
- LED is ON = External IR relay is turned ON
- LED is OFF = External IR relay is turned OFF
- LED is 0.5s OFF, 0.5s ON = IR communication error

d. External IR relay disabled
- LED is ON = modbus packet is sent
- LED is OFF = modbus packet is received

Quick trouble shooting

Here are a few hints for network installation if things dont work as expected.

1. Make sure a device is in factory reset state before including. In doubt exclude before include.
2. If inclusion still fails, check if both devices use the same frequency.
3. Remove all dead devices from associations. Otherwise you will see severe delays.
4. Never use sleeping battery devices without a central controller.
5. Dont poll FLIRS devices.
6. Make sure to have enough mains powered device to benefit from the meshing

Association - one device controls an other device

Z-Wave devices control other Z-Wave devices. The relationship between one device controlling another device is called association. In order to control a di device, the controlling device needs to maintain a list of devices that will receive controlling commands. These lists are called association groups and they a related to certain events (e.g. button pressed, sensor triggers, ...). In case the event happens all devices stored in the respective association group will rece same wireless command wireless command, typically a 'Basic Set' Command.

Association Groups:

Group Number	Maximum Nodes	Description
1	1	Lifeline

Configuration Parameters

Z-Wave products are supposed to work out of the box after inclusion, however certain configuration can adapt the function better to user needs or unlock fu enhanced features.

IMPORTANT: Controllers may only allow configuring signed values. In order to set values in the range 128 ... 255 the value sent in the application shall be value minus 256. For example: To set a parameter to 200 it may be needed to set a value of 200 minus 256 = minus 56. In case of a two byte value the sar applies: Values greater than 32768 may needed to be given as negative values too.

Parameter 7: Input 1 switch function selection

Size: 1 Byte, Default Value: 4

Setting	Description
0	disabled
2	IR external relay control – mono stable push button
3	IR external relay control - bi stable switch
4	External relay control – mono stable push button
5	External relay control – bi stable switch

Parameter 10: Activate / deactivate functions ALL ON / ALL OFF

Only for older Version!
Size: 2 Byte, Default Value: 255

Setting	Description
255	ALL ON active, ALL OFF active.
0	ALL ON is not active, ALL OFF is not active
1	ALL ON is not active, ALL OFF active
2	ALL ON active, ALL OFF is not active DIN Dimmer module responds to commands ALL ON / ALL OFF t sent by the main controller or by other controller belonging to the system.

Parameter 11: Automatic turning off IR external relay output after set time

When IR external relay is ON it goes automatically OFF after time defined by this Parameter. Timer is reset to zero each time the module receive ON comn regardless from where it comes (push button, associated module, controller,..)
Size: 2 Byte, Default Value: 0

Setting	Description
0 - 59	Auto OFF disabled
60 - 32535	Auto OFF enabled with define time, step is 1s

Parameter 12: Automatic turning on IR external relay output after set time

When IR external relay is OFF it goes automatically ON after time defined by this Parameter. Timer is reset to zero each time the module receive OFF com regardless from where it comes (push button, associated module, controller,..).
Size: 2 Byte, Default Value: 0

Setting	Description
0 - 59	Auto ON disabled
60 - 32535	Auto ON enabled with define time, step is 1s.

Parameter 13: Automatic turning off External relay output after set time

When External relay is ON it goes automatically OFF after time defined by this parameter. Timer is reset to zero each time the module receive ON comman regardless from where it comes (push button, associated module, controller,..).
Size: 2 Byte, Default Value: 0

Setting	Description
0 - 59	Auto OFF disabled
60 - 32535	Auto OFF enabled with define time, step is 1s

Parameter 14: Automatic turning on External relay after output set time

When External relay is OFF it goes automatically ON after time defined by this parameter. Timer is reset to zero each time the module receive OFF comma regardless from where it comes (push button, associated module, controller,..).

Size: 2 Byte, Default Value: 0

Setting	Description
0 - 59	Auto ON disabled
60 - 32535	Auto ON enabled with define time, step is 1s

Parameter 40: Power reporting in Watts on power change

Set value means percentage, set value from 0 - 100=0% - 100%. NOTE: if power changed is less than 1W, the report is not send (pushed), independent of set.

Size: 1 Byte, Default Value: 5

Setting	Description
0	reporting disabled
1 - 100	1% - 100% Reporting enabled. Power report is send (push) only when actual power in Watts in real time for more than set percentage comparing to previous actual power in Watts, step is 1%.

Parameter 42: Power reporting in Watts by time interval

Set value means time interval (0 – 32767) in seconds, when power report is send.

Size: 2 Byte, Default Value: 0

Setting	Description
0 - 59	reporting disabled
60 - 32767	Reporting enabled. Power report is send with time interval set by entered value. Please note, that too fa can cause too much Z-Wave traffic resulting in Z-Wave poor response

Parameter 45: Reset Power counters

Size: 1 Byte, Default Value: 0

Setting	Description
0	no function
1	reset counter 1 – KWh
2	reset counter 2 – kVARh
4	reset counter 3 – kVAh
15	reset ALL counters

Parameter 100: Enable / Disable endpoints IR external relay and External relay

Enabling IR external relay and External relay or both of them, means that endpoint (IR external relay) and endpoint (External relay) or both will be present Disabling them will result in hiding endpoints according to Parameter set value. Note that hiding endpoint has no impact on its functionality.NOTE1: After pa change, first exclude module (without setting parameters to default value) and then re include the module. NOTE2: If you dont have IR BiComm relay modu and you enable IR communication (parameter 100 is 2 or 3) there will be no valid IR relay state reported. It will be reported IR COMMUNICATION ERROR will BLINK.

Size: 1 Byte, Default Value: 0

Setting	Description
0	Endpoints IR external relay and External relay disabled
1	Endpoints IR external relay disabled, External relay enabled
2	Endpoints IR external relay enabled, External relay disabled
3	Endpoints IR external relay and External relay enabled

Parameter 110: Maximum Power auto off

Set value means Maximum Power Consumption (0 - 15000) in watts (W), when relays are turned off according to parameters no. 111 and 112.

Size: 2 Byte, Default Value: 0

Setting	Description
0	no function
1 - 15000	1 W - 15000 W Maximum Power Consumption.

Parameter 111: - Delay overpower off

Set value means number of second to power off relay (defined by parameters no. 110 and 112) before restart (30 - 32535) in seconds (s)

Size: 2 Byte, Default Value: 30

Setting	Description
30 - 32535	30 s – 32535 s delay

Parameter 112: Relay to power off

Set value selects relay to be powered off when threshold is reached (defined by parameters no. 110 and 111).

Size: 1 Byte, Default Value: 0

Setting	Description
0	switch between the 2 relays (power off relay 1 first, after power on, if power consumption is still over, pov relay 2, ..)
1	always power off relay 1 (IR external relay)
2	always power off relay 2 (External relay)
3	always power off both relays (relay 1 and relay 2)

Parameter 130: Serial Number (Read Only)

Since Version 7.6

Size: 4 Byte, Default Value:

Setting	Description

Technical Data

Dimensions	36x90x64mm mm
Weight	140 gr
Hardware Platform	ZM5202
EAN	3830062070362
IP Class	IP 20
Voltage	230 V
Load	65 A
Device Type	Smart Meter
Firmware Version	07.06
Z-Wave Version	04.3d
Z-Wave Product Id	0x0159.0x0007.0x0052
Frequency	Europe - 868,4 Mhz
Maximum transmission power	5 mW

Supported Command Classes

- Basic
- Meter
- Crc 16 Encap
- Association Grp Info
- Device Reset Locally
- Zwaveplus Info
- Supervision
- Configuration
- Manufacturer Specific
- Powerlevel
- Firmware Update Md
- Association
- Version
- Multi Channel Association
- Security
- Transport Service
- Security 2

Controlled Command Classes

- Transport Service
- Security 2

Explanation of Z-Wave specific terms

- **Controller** — is a Z-Wave device with capabilities to manage the network. Controllers are typically Gateways,Remote Controls or battery operated wall controllers.
- **Slave** — is a Z-Wave device without capabilities to manage the network. Slaves can be sensors, actuators and even remote controls.
- **Primary Controller** — is the central organizer of the network. It must be a controller. There can be only one primary controller in a Z-Wave network.

- **Inclusion** — is the process of adding new Z-Wave devices into a network.
- **Exclusion** — is the process of removing Z-Wave devices from the network.
- **Association** — is a control relationship between a controlling device and a controlled device.
- **Wakeup Notification** — is a special wireless message issued by a Z-Wave device to announces that is able to communicate.
- **Node Information Frame** — is a special wireless message issued by a Z-Wave device to announce its capabilities and functions.
