# FXpanthera MkII

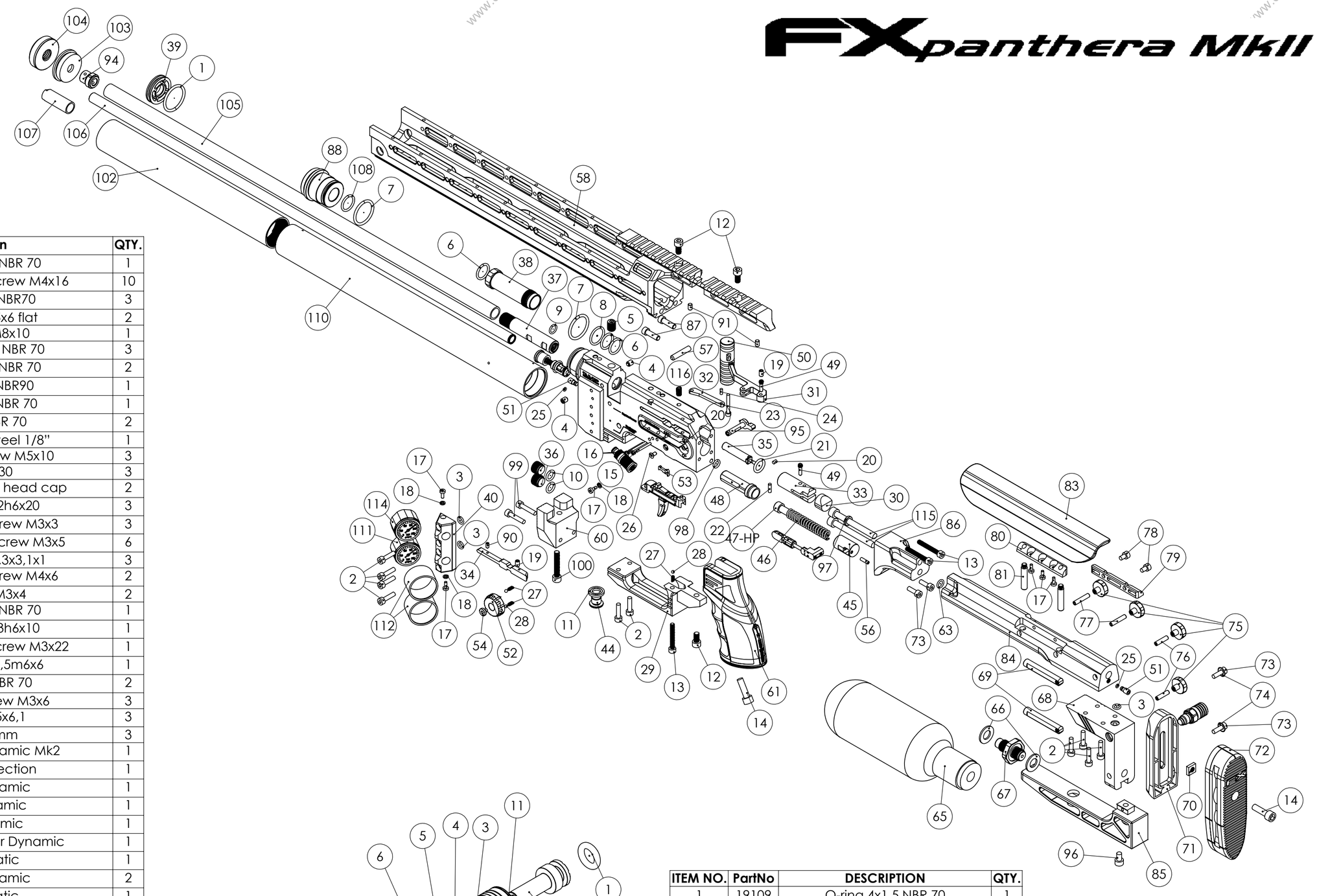

| ITEM NO. | PartNo | Description | QTY. |
|---|---|---|---|
| 1 | 19105 | O-ring 25,0x2,5 NBR 70 | 1 |
| 2 | 5201 | Socket head cap screw M4x16 | 10 |
| 3 | 19726 | O-ring 5,5x1,5 NBR70 | 3 |
| 4 | 19114 | Grub screw M5x6 flat | 2 |
| 5 | 11532 | Grub screw M8x10 | 1 |
| 6 | 19950 | O-ring 14,0 x 2,0 NBR 70 | 3 |
| 7 | 19485 | O-ring 23,0x2,5 NBR 70 | 2 |
| 8 | 5178 | O-ring 16,5x2 NBR90 | 1 |
| 9 | 19209 | O-ring 7,5x1,5 NBR 70 | 1 |
| 10 | 19835 | O-ring 8x2 NBR 70 | 2 |
| 11 | 1511 | Washer rubber/steel 1/8" | 1 |
| 12 | 5173 | Socket head screw M5x10 | 3 |
| 13 | 2536 | Screw M4x30 | 3 |
| 14 | 19743 | screw M6x20 Socket head cap | 2 |
| 15 | 11502 | Cylindrical pin 2h6x20 | 3 |
| 16 | 2562 | Cup point grub screw M3x3 | 3 |
| 17 | 19715 | Socket head cap screw M3x5 | 6 |
| 18 | 19736 | Plastic Washer 5,3x3,1x1 | 3 |
| 19 | 2501 | Cup point grub screw M4x6 | 2 |
| 20 | 16092 | Grub screw M3x4 | 2 |
| 21 | 5159 | O-ring 10,6x2,4 NBR 70 | 1 |
| 22 | 11509 | Cylindrical pin 3h6x10 | 1 |
| 23 | 19740 | Socket head cap screw M3x22 | 1 |
| 24 | 19026 | Cylindrical pin 2,5m6x6 | 1 |
| 25 | 19761 | O-ring 2,2x1 NBR 70 | 2 |
| 26 | 2504 | Countersunk screw M3x6 | 3 |
| 27 | 11501 | Spring 0,5x2,5x6,1 | 3 |
| 28 | 4066 | Steel ball 3mm | 3 |
| 29 | 20912 | Trigger Guard Dynamic Mk2 | 1 |
| 30 | 20913 | Reloading Protection | 1 |
| 31 | 20914 | Sidelever Dynamic | 1 |
| 32 | 20915 | Linkage Dynamic | 1 |
| 33 | 20916 | Carrier Dynamic | 1 |
| 34 | 20917 | Sidelever Slot Cover Dynamic | 1 |
| 35 | Support page | See Schematic | 1 |
| 36 | 20927 | Plug M12 Dynamic | 2 |
| 37 | Support Page | See schematic | 1 |
| 38 | 20933 | Barrelsupport Dynamic | 1 |
| 39 | 20943 | Shroud Bushing with airvents Dynamic | 1 |
| 40 | 20986 | Angled Mount (Dual) Dynamic | 1 |
| 44 | 10294 | Plug for manometer Impact M3 | 1 |
| 45 | 20951 | Spring Guide Dynamic | 1 |
| 46 | 11500 | Hammerspring | 1 |
| 47-HP | 11540 | Hammer weight | 1 |
| 48 | 19039 | Hammer V7 | 1 |
| 49 | 20946 | Carrier Screw Dynamic | 2 |
| 50 | 10301 | Side lever handle Impact M3 | 1 |
| 51 | 10335 | Brass adapter Impact M3 | 2 |
| 52 | 20735 | Power adjuster Impact M4 | 1 |
| 53 | 21093 | Trigger Sear Dreamline, Crown 2023 | 1 |
| 54 | 21068 | Power adjuster screw | 1 |
| 56 | 11508 | Grub screw M3x10 | 1 |
| 57 | 2566 | screw M5x25 Cup point grub | 1 |
| 58 | 21120 | Frontstock Dynamic Mk2 | 1 |
| 59 | 21124 | Main Block Dynamic Mk2 | 1 |
| 60 | 21121 | Barricade stop Dynamic Mk2 | 1 |
| 61 | 21670 | Grip | 1 |
| 63 | 5125 | O-ring 6,5 x 1,5 NBR 70 | 1 |
| 64 | 14000 | Air bottle steel end | 1 |
| 65 | 5541 | Tube/ Bottle Carbonfiber 300cc | 1 |
| 66 | 11507 | Rubber/Steel Washer | 2 |
| 67 | 20983 | Air Cylinder Connector Dynamic | 1 |
| 68 | 20902 | Recoilpad L-Mount Dynamic Mk2 | 1 |
| 69 | 20908 | Recoilpad Guide Pin Dynamic | 2 |
| 70 | 5176 | Square Nut M6 Stainless Steel | 1 |
| 71 | 20901 | Recoilpad Mount Dynamic | 1 |
| 72 | 20900 | Recoilpad Dynamic | 1 |
| 73 | 16123 | Screw M4x12 | 4 |
| 74 | 2570 | Washer 10x4,2x0,5 | 2 |
| 75 | 20948 | Cheek Piece Locking Knob Dynamic | 4 |
| 76 | 5175 | Grubscrew M4x16 | 2 |
| 77 | 5174 | screw M4x20 grub | 2 |
| 78 | 5230 | Screw M4x6 | 2 |
| 79 | 20950 | Cheek Piece Cover Release Cover Dynamic | 1 |
| 80 | 20977 | Cheek Piece Mount Dynamic | 1 |
| 81 | 20949 | Cheek Piece Bar Dynamic | 2 |
| 82 | 20989 | Connectorplug Dynamic | 1 |
| 83 | 21912 | Cheekrest piece Tiger | 1 |
| 84 | 20906 | Rear Stock Dynamic Mk2 | 1 |
| 85 | 21129 | Bagrider Dynamic Mk2 | 1 |
| 86 | 20909 | Rear Stock Tranistion Dynamic | 1 |
| 87 | 21131 | M5x15 Dynamic Mk2 | 2 |
| 88 | 20938 | Valvetube End, Plenum PRS | 1 |
| 89 | 12035 | Grub screw M2,5x2,5 | 1 |
| 90 | 19678 | Conical grub screw M3x6 | 1 |
| 91 | 21132 | Cylindrical pin 4m6x6 | 2 |
| 92 | 19582 | Magazinespring Wildcat | 1 |
| 93 | 15032 | Socket head cap screw M4x8 | 1 |
| 94 | Support Page | See schematic | 1 |
| 95 | 10336 | Safety Impact M3 | 1 |
| 96 | 19684 | screw M5x8 Socket head cap | 1 |
| 97 | 20973 | Seal Washer Guide M6 Dynamic | 1 |
| 98 | 19186 | O-ring 5,85x1,78 NBR 70 | 1 |
| 99 | 5205 | Socket head cap screw M4x20 | 2 |
| 100 | 2510 | screw M5x30 Socket head cap | 1 |
| 102 | Support page | See schematic | 1 |
| 103 | 20944 | Shroud Muzzle Cap Dynamic | 1 |
| 104 | 20945 | Muzzle Thread Cover Dynamic | 1 |
| 105 | Support page | See schematic | 1 |
| 106 | Support page | See schematic | 1 |
| 107 | Support page | See schematic | 1 |
| 108 | 19950-90 | O-ring 14x2 NBR90 | 1 |
| 110 | Support page | See schematic | 1 |
| 111 | 19791 | Manometer 27mm WIKA 300bar | 1 |
| 112 | 19776 | Black sleeve for manometer Impact | 2 |
| 114 | 19775-1 | Manometer 27mm WIKA 250bar | 1 |
| 115 | 5172 | M6x50 Head | 2 |
| 116 | 11015 | Second stage trigger screw M5 | 1 |

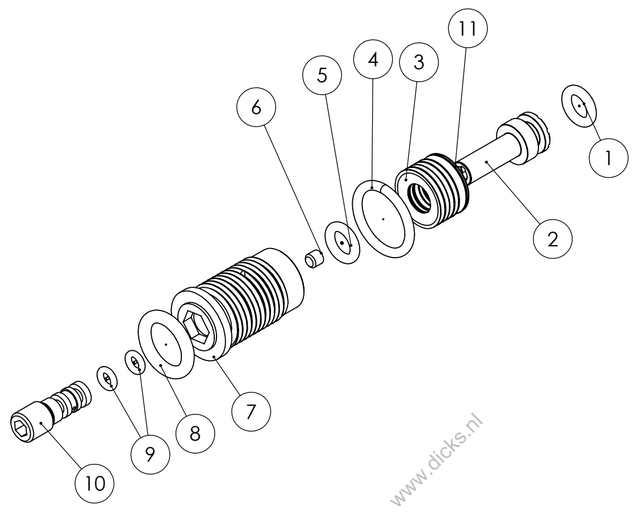

| ITEM NO. | PartNo | DESCRIPTION | QTY. |
|---|---|---|---|
| 1 | 19109 | O-ring 4x1,5 NBR 70 | 1 |
| 2 | 21070 | Regulator piston Dynamic | 1 |
| 3 | 2570 | Washer 10x4,2x0,5 | 8 |
| 4 | 19790 | O-ring 10,0 x 1,5 NBR 90 | 1 |
| 5 | 5138 | O-ring 4,0 x 1,5 NBR 90 | 1 |
| 6 | 20400 | Plastic gasket Regulator piston | 1 |
| 7 | 19697-1 | Regulator housing Impact/Crown | 1 |
| 8 | 19225 | O-ring 7,5x2,0 NBR 70 | 1 |
| 9 | 19731 | O-ring 2x1 NBR 90 | 2 |
| 10 | 19695 | Regulator Screw Impact | 1 |
| 11 | 2572 | Washer 10x4,2x0,6 | 3 |
| 11-12ft | 2572 | Washer 10x4,2x0,6 | 2 |
| 12-12ft | 2574 | Washer 10x4,2x0,4 | 6 |
| 13-12ft | 2570 | Washer 10x4,2x0,5 | 3 |

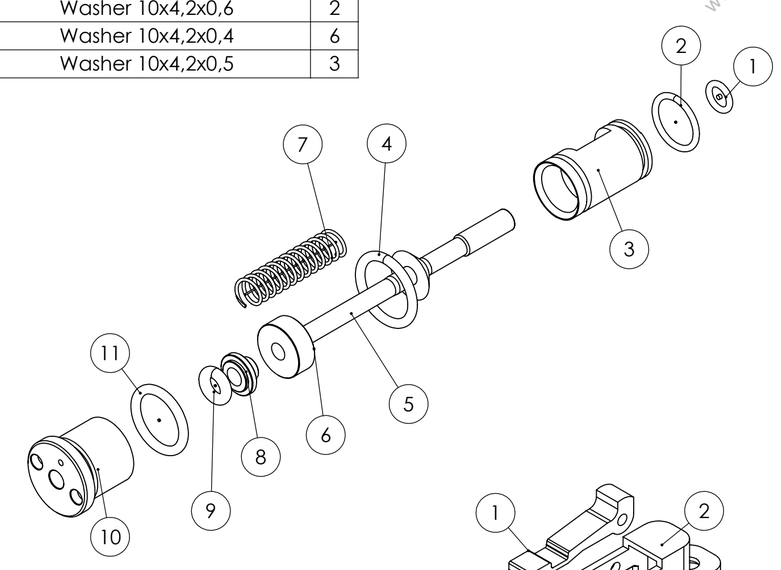

| ITEM NO. | PartNo | DESCRIPTION | QTY. |
|---|---|---|---|
| 1 | 5158 | O-ring 3,5x1 NBR 70 | 1 |
| 2 | 19108 | O-ring 8,0 x 1,0 NBR 90 | 1 |
| 3 | 20923 | Valve Seat Dynamic | 1 |
| 4 | 19790 | O-ring 10,0 x 1,5 NBR 90 | 1 |
| 5 | 20924 | Valve Pin Dynamic | 1 |
| 5-12ft | 20924-12ft | Valve pin Dynamic 12ft | 1 |
| 6 | 20926 | Valve Seal Dynamic | 1 |
| 7 | 19850 | Spring 0,5x4x20 | 1 |
| 8 | 20959 | Spring Seat 3,1mm Dynamic | 1 |
| 9 | 5107 | O-ring 2,9 x 1,78 PUR 90 | 1 |
| 10 | 20925 | Valve Housing Dynamic | 1 |
| 11 | 19763 | O-ring 9x1,5 NBR 90 | 1 |

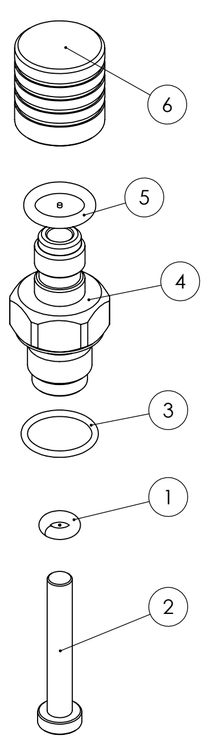

| ITEM NO. | PartNo | DESCRIPTION | QTY. |
|---|---|---|---|
| 1 | 21908 | Trigger wheel arm Match Dynamic Mk2 | 1 |
| 2 | 21919 | Match trigger house Dynamic Mk2 | 1 |
| 3 | 2504 | Countersunk screw M3x6 | 2 |
| 4 | 2500 | Grub screw M3x6 | 1 |
| 5 | 16092 | Grub screw M3x4 | 2 |
| 6 | 21910 | Triggerbase Match Dynamic Mk2 | 1 |
| 7 | 5163-35 | Red Cord 3x3,5mm | 4 |
| 8 | 10346 | Triggerpin 11mm Adjustable | 1 |
| 9 | 19136 | Adjustable trigger blade | 1 |
| 10 | 21909-1 | Triggerwedge Match Dynamic Mk2 | 1 |
| 11 | 19042 | Cylindrical pin 2mx6x8 | 2 |
| 12 | 11508 | Grub screw M3x10 | 1 |
| 13 | 19178 | Screw M2x4 | 1 |
| 14 | 12035 | Grub screw M2,5x2,5 | 2 |
| 15 | 21122 | Trigger AR Dynamic Mk2 | 1 |

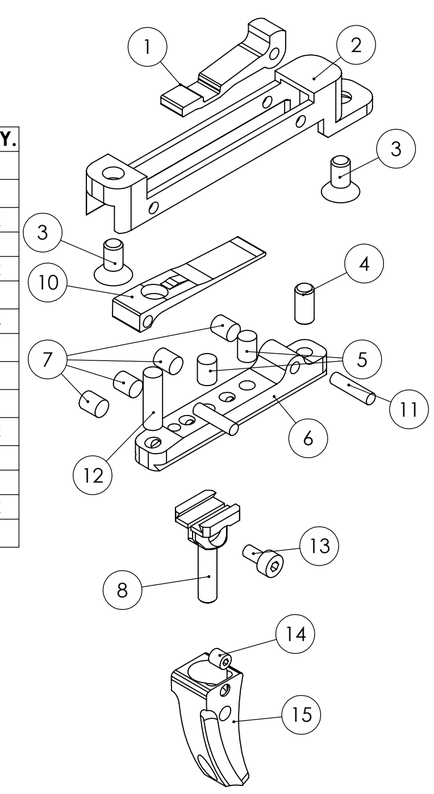

| ITEM NO. | PartNo | DESCRIPTION | QTY. |
|---|---|---|---|
| 1 | 19005 | Stainless Inlet valve rod - (former blue) | 1 |
| 2 | 5107 | O-ring 2,9 x 1,78 PUR 90 | 1 |
| 3 | 19720 | O-ring 10,0 x 1,0 NBR 90 | 1 |
| 4 | 16303 | Quick connector short | 1 |
| 5 | 4528 | O-ring 7,66 x 1,78 NBR 70 | 1 |
| 6 | 19910 | Dust Cover - Quick Connection | 1 |

| ITEM NO. | PartNo | DESCRIPTION | QTY. |
|---|---|---|---|
| 1 | 10293 | Quick adjustment guide Impact M3 | 1 |
| 2 | 1147 | Spring 0,3xmax2,5ydx20x23,5nt | 1 |
| 3 | 10291 | Quick adjustment axle Impact M3 | 1 |
| 4 | 10292 | Quick adjustment wheel Impact M3 | 1 |
| 5 | 12035 | Grub screw M2,5x2,5 | 1 |
| 6 | 20050 | Hammer Adjuster Dynamic | 1 |

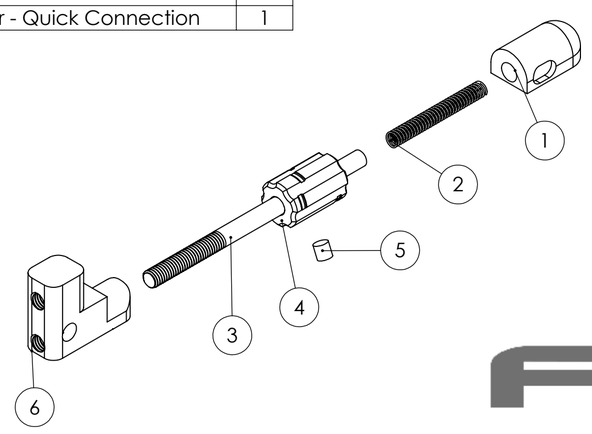

FXairguns

www.dicks.nl