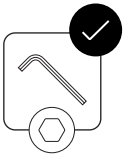

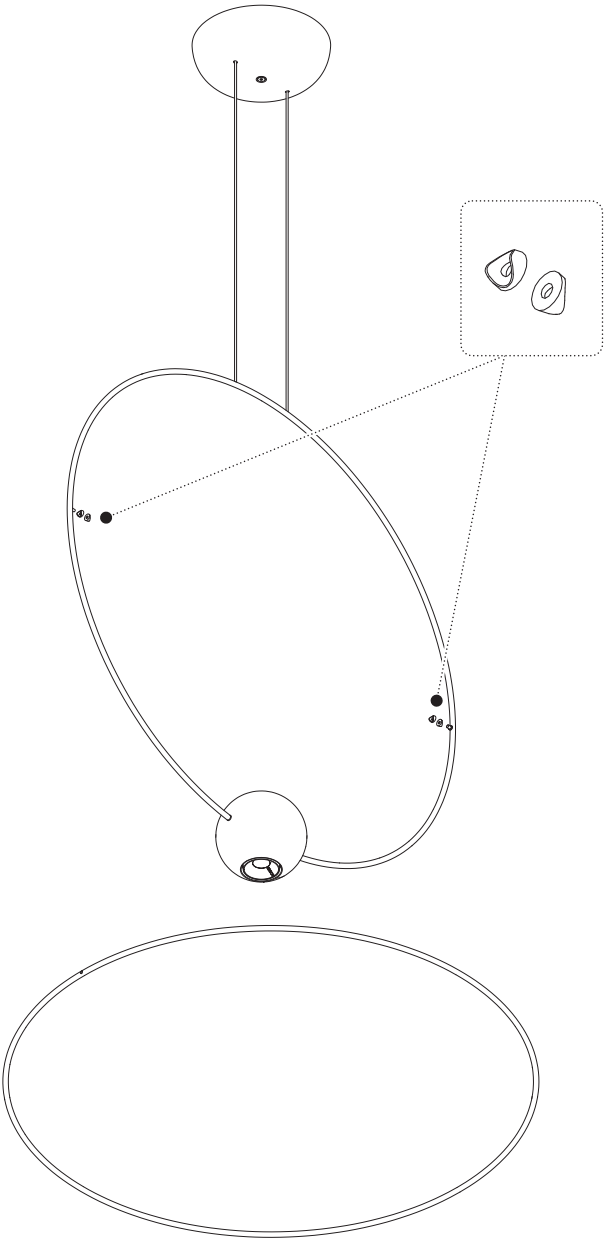

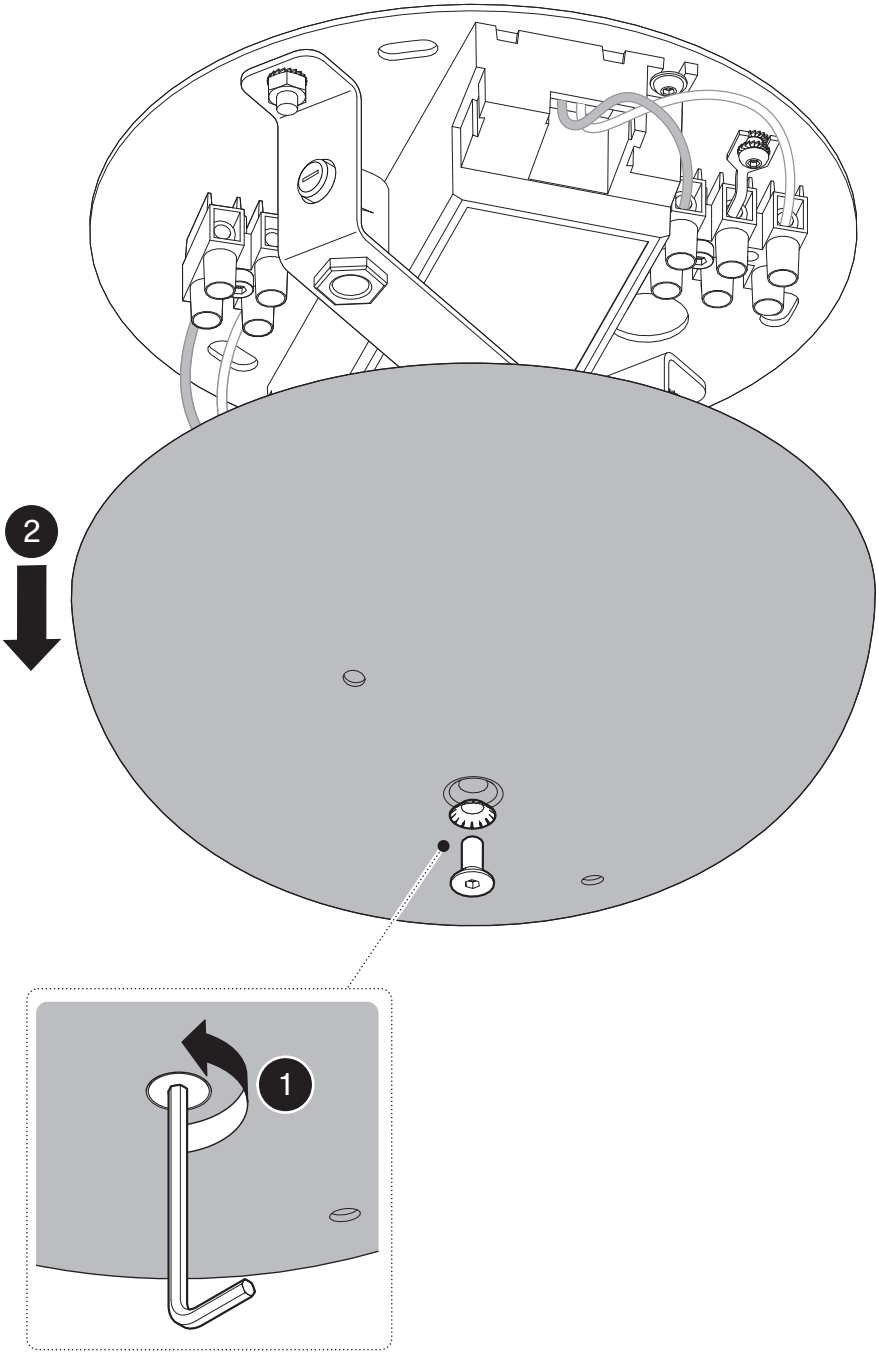
2
1

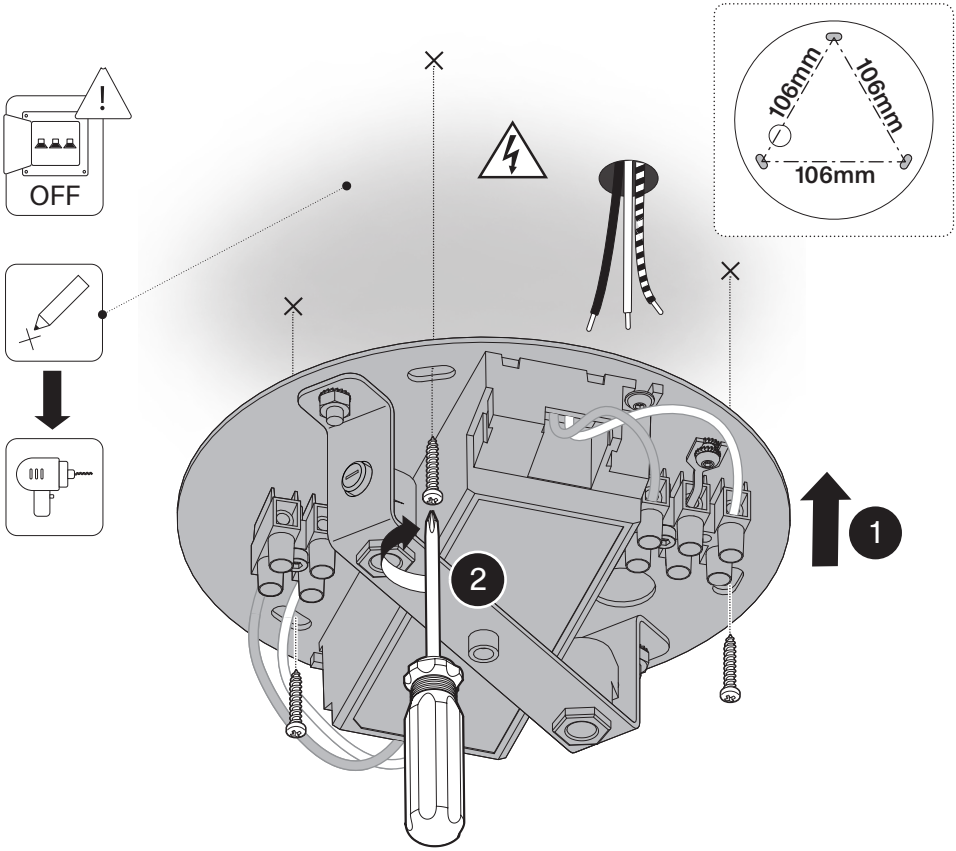
OFF
106mm
106mm
106mm
1
2

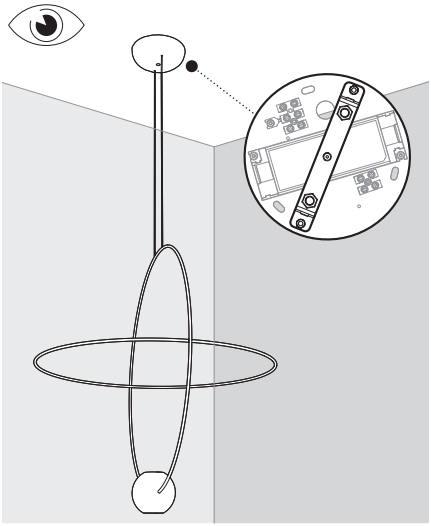

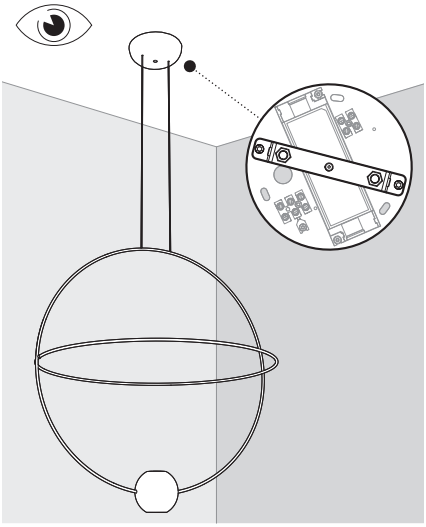

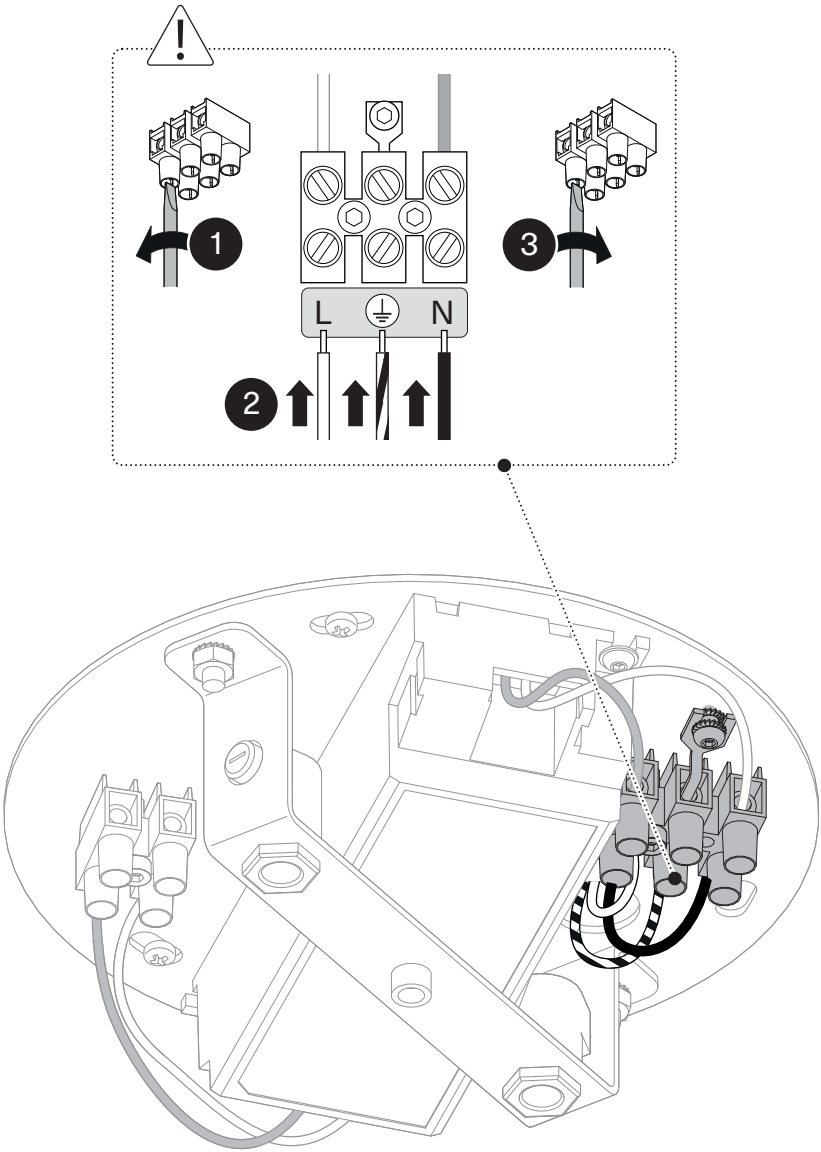
1
2
3
L
N

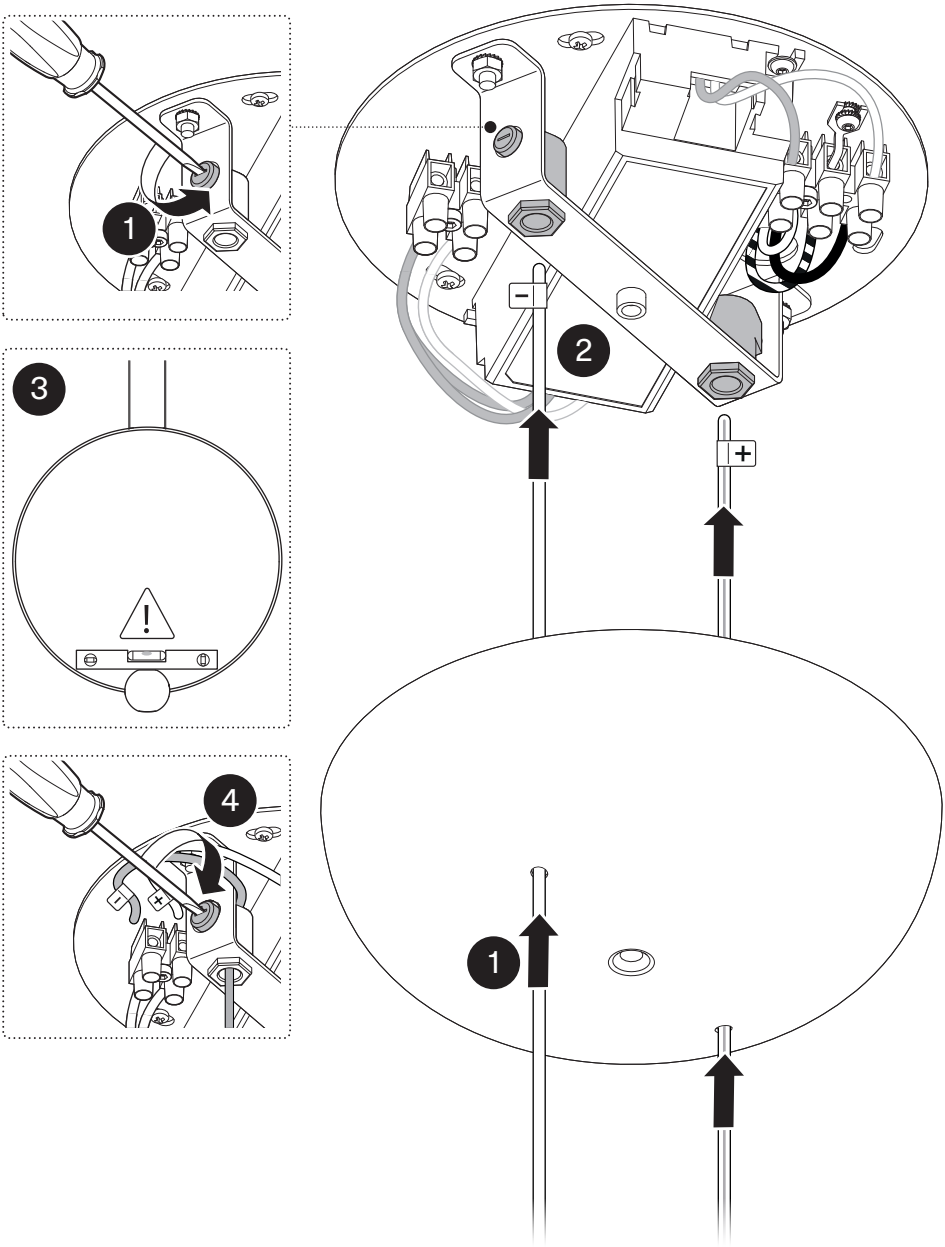
1
2
3
4
1

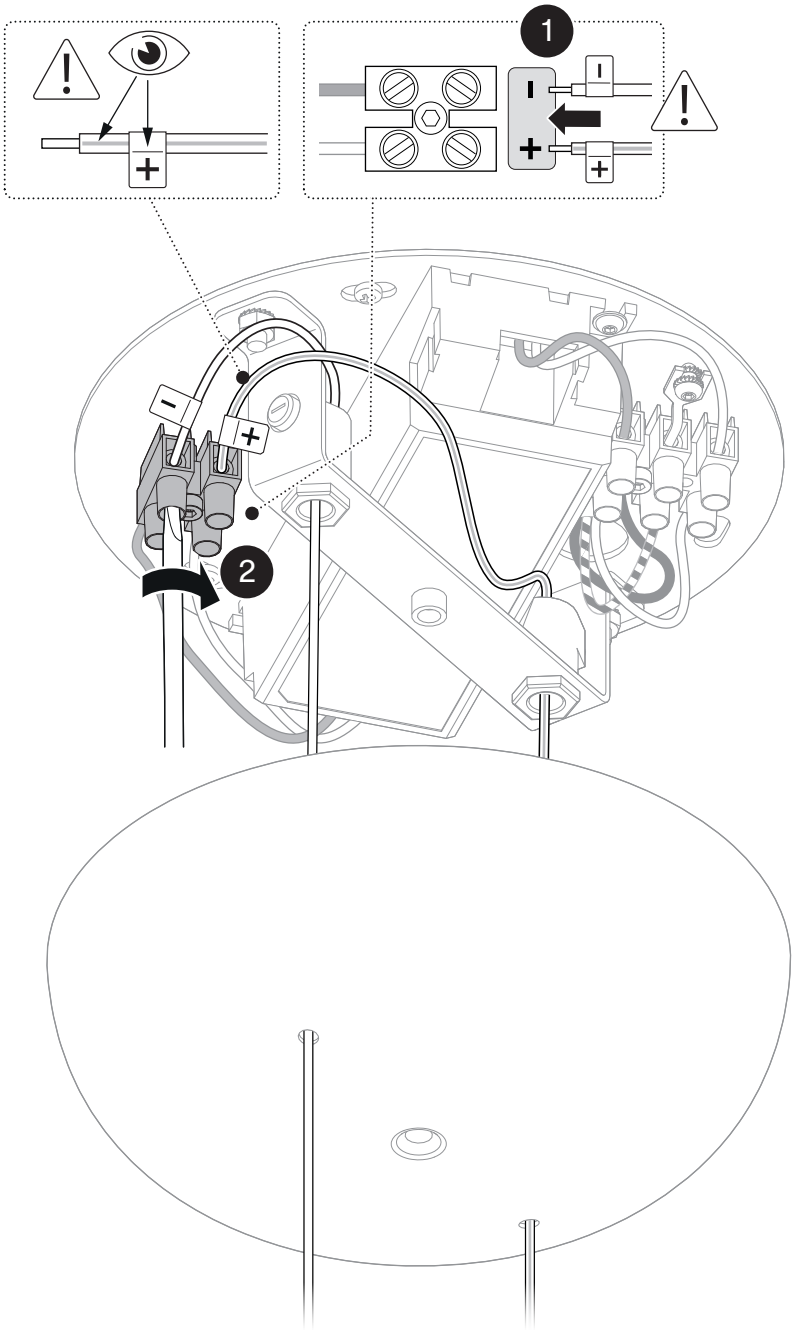
1
2

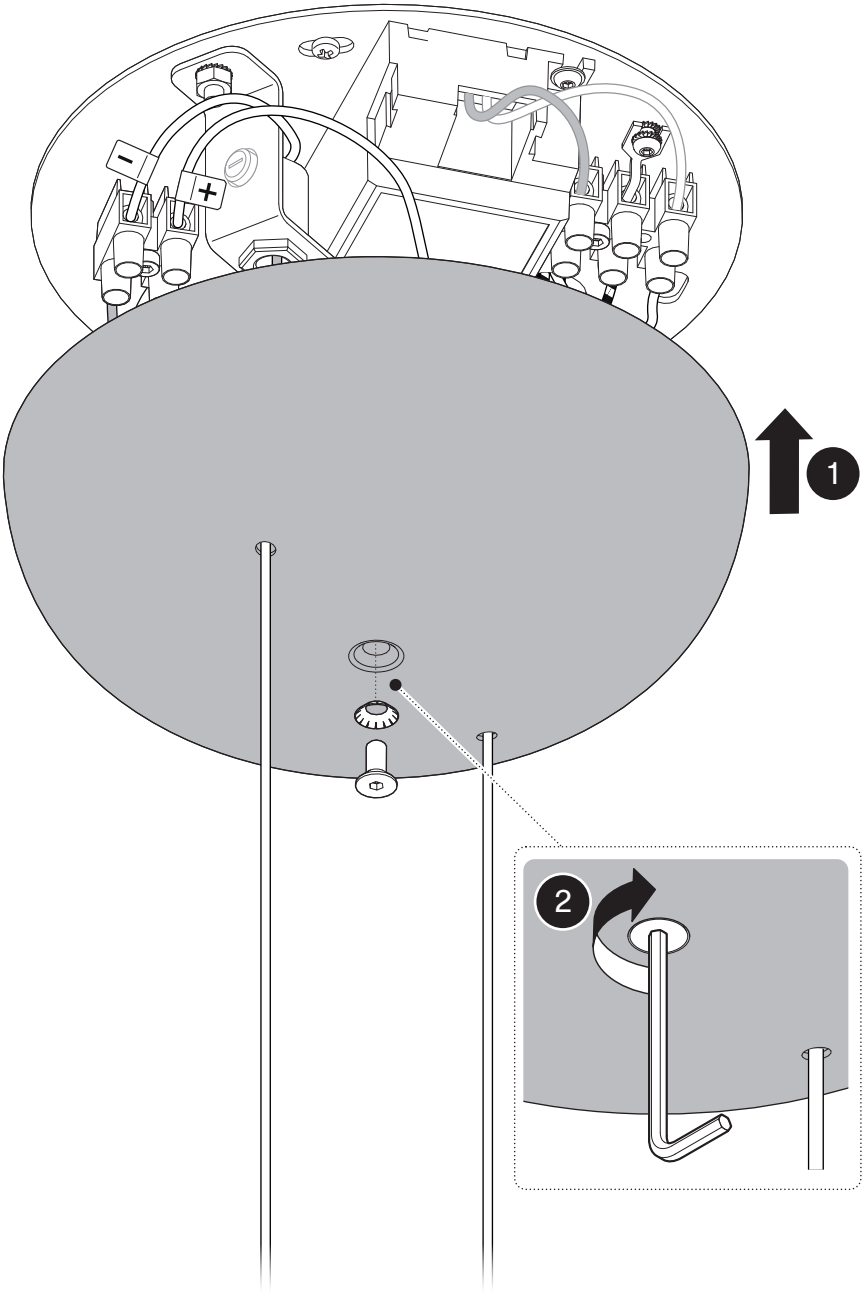
1
2

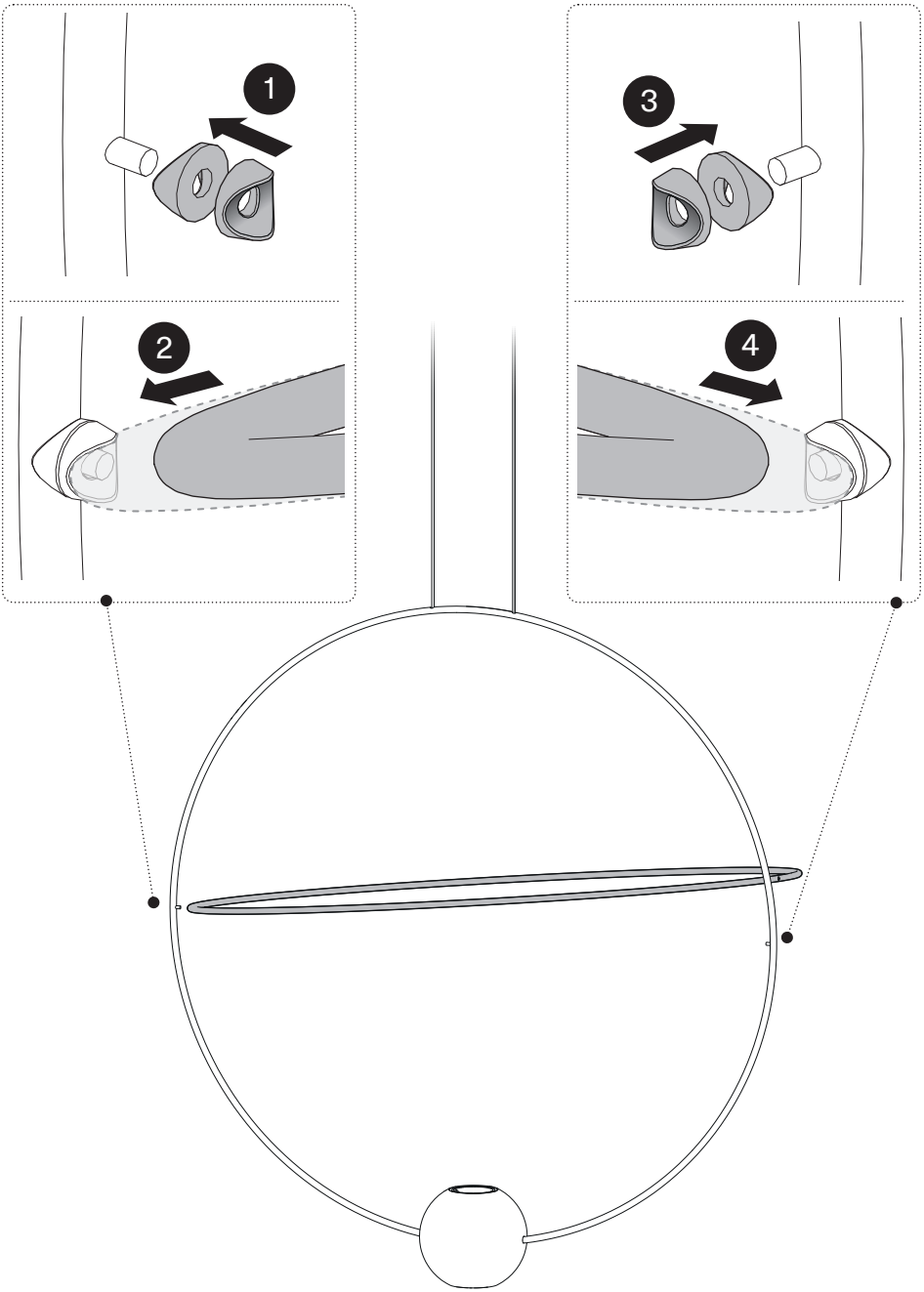
1
2
3
4

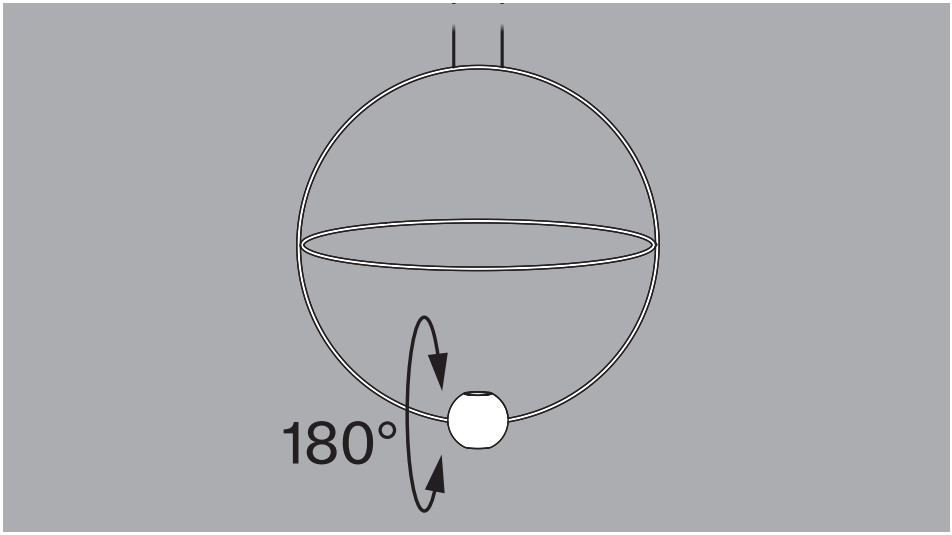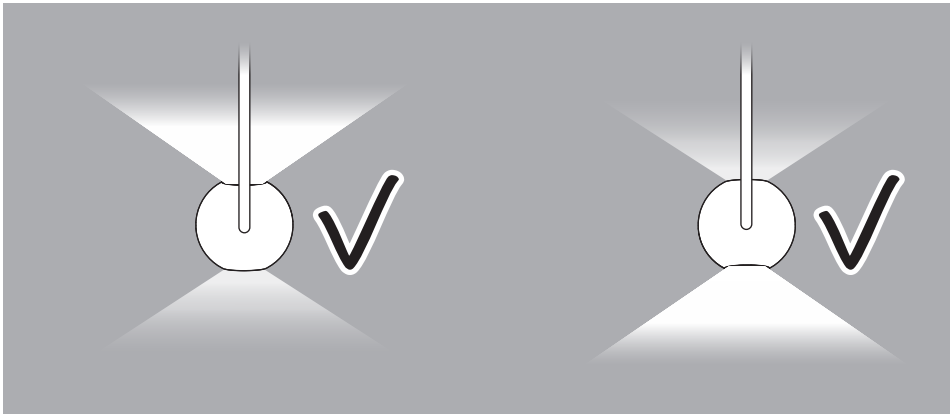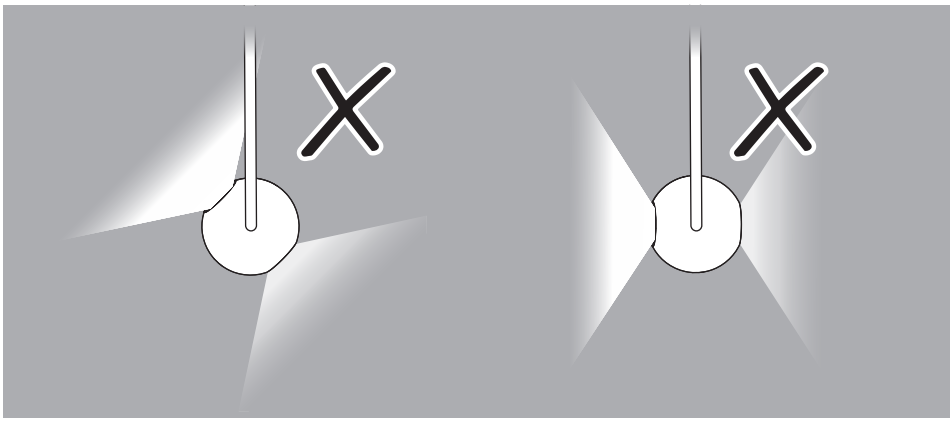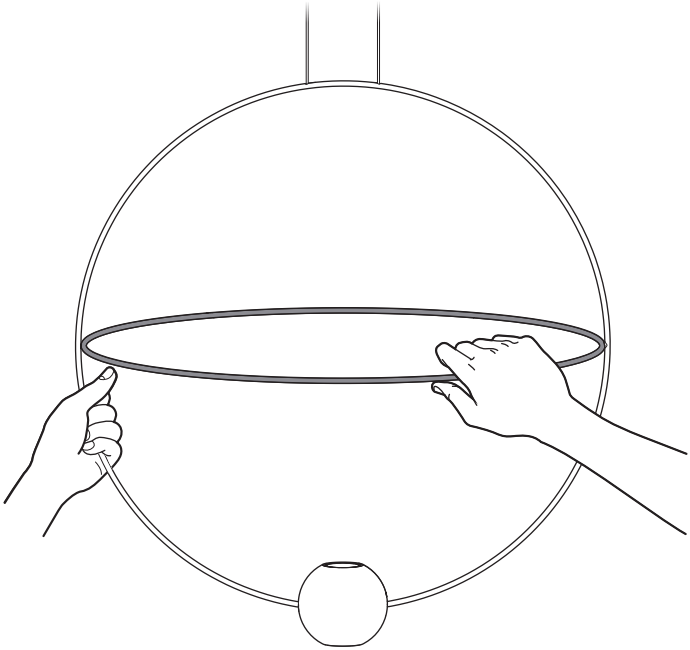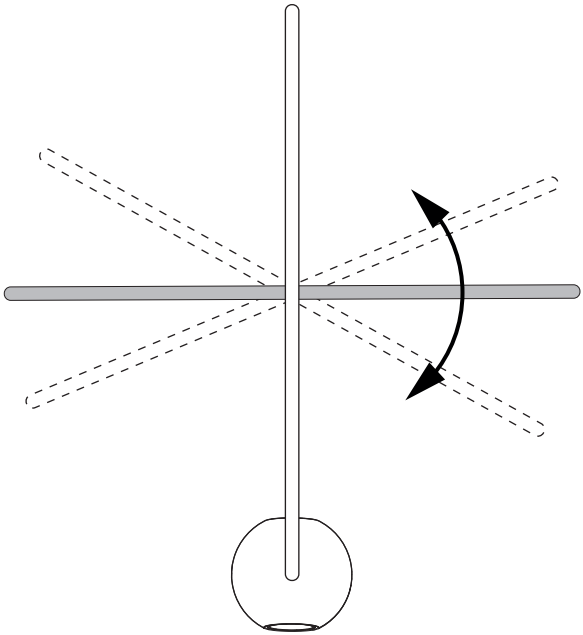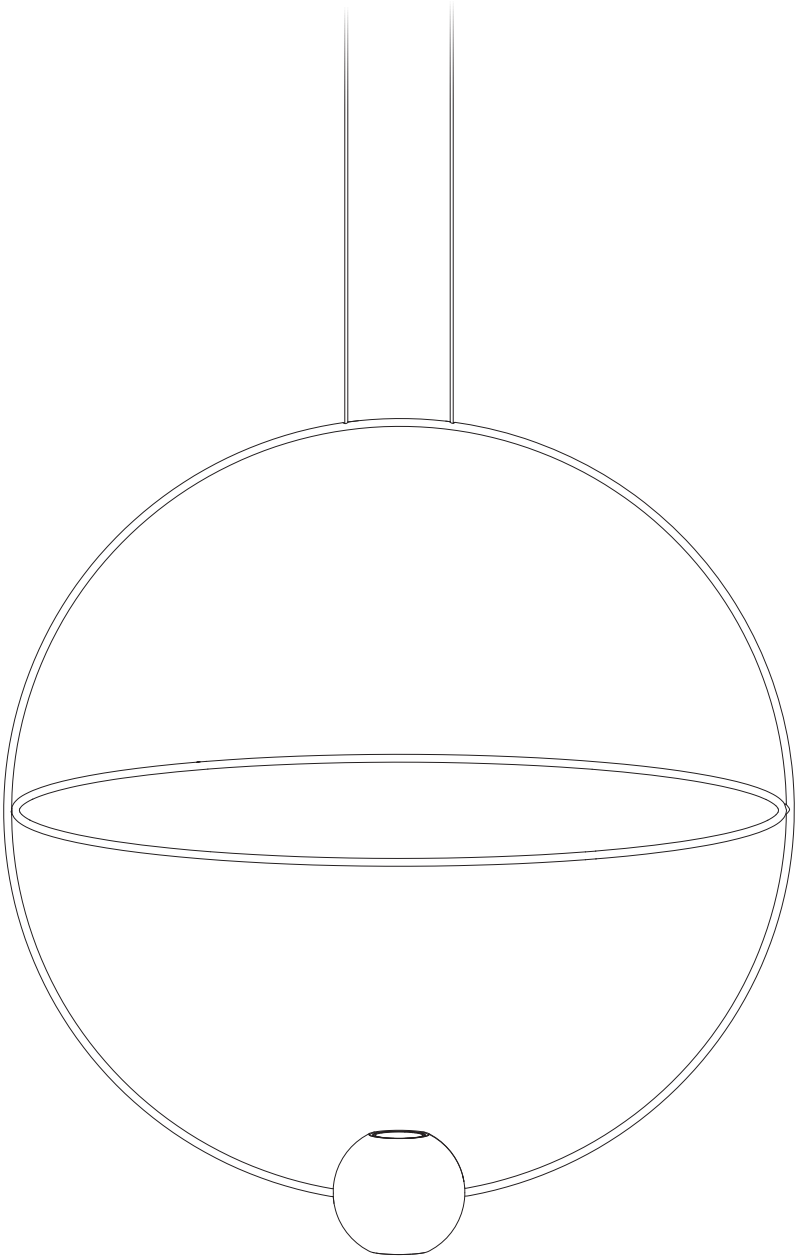
180°