VLINCA Connected by CASAMBI

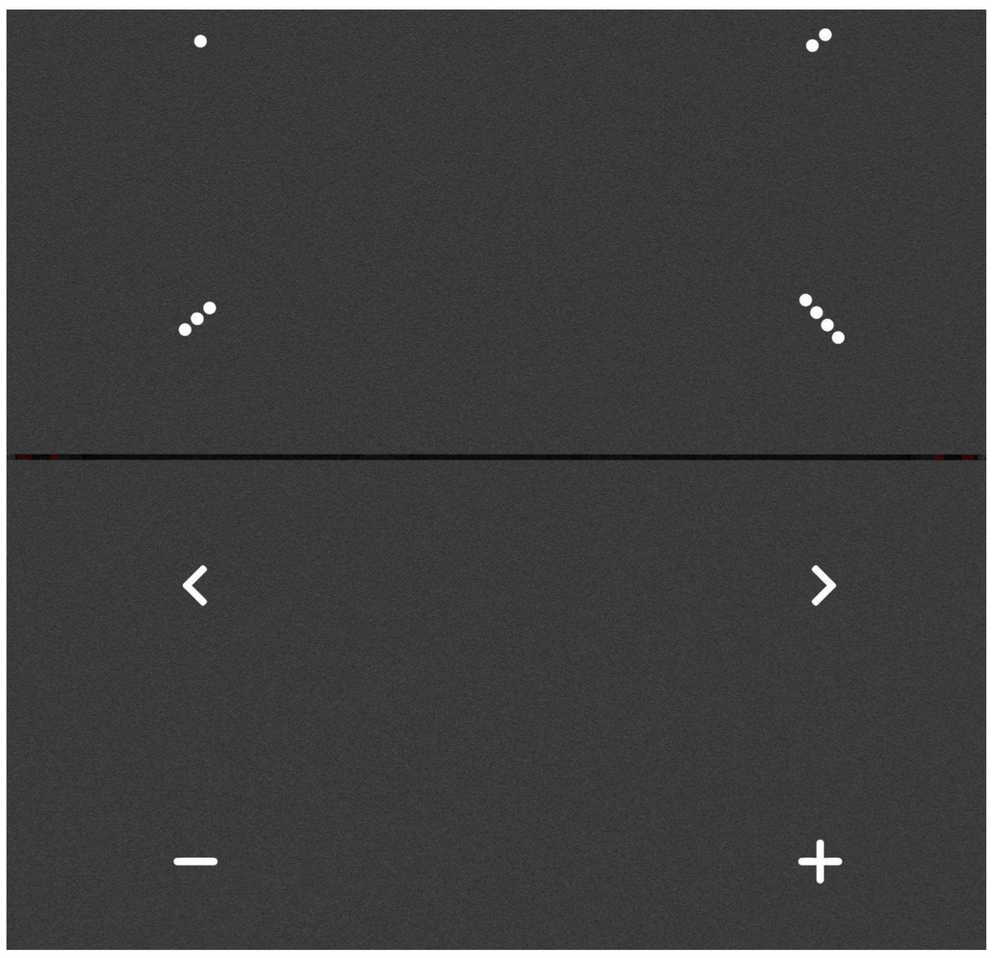

VBA-RCS8

Version V1.0

Product description

VBA-RCS8 is a wireless, long-range, Casambi-enabled control panel that brings huge flexibility to interior design as the device doesn’t require wires. The switch can be kept wherever the user wishes and gives direct access to all the Casambi lighting control functionalities.

Specification parameters

Power supply mode	• Lithium Battery powered
Battery	• Type: CR2430 Lithium Coin Cell
Battery life	• 2 - 5 years, depending on usage
Operating conditions	• Operating temperature: -20°C... +40°C • Storage temperature: -25°C... +50°C • Max relative humidity: 0...65%, non - cond.
Radio Transceiver	• Operating frequencies: 2.402...2.480 GHZ • Output power: -40dBm to 8dBm • Wireless range, in open air ≥ 50 m
Physical parameter	• Dimensions: 86*86*15.2 mm • Weight: 116g • Degree of protection: IP20 (indoor use only) • Color: Black,White, Light grey, Baby blue,Light pink 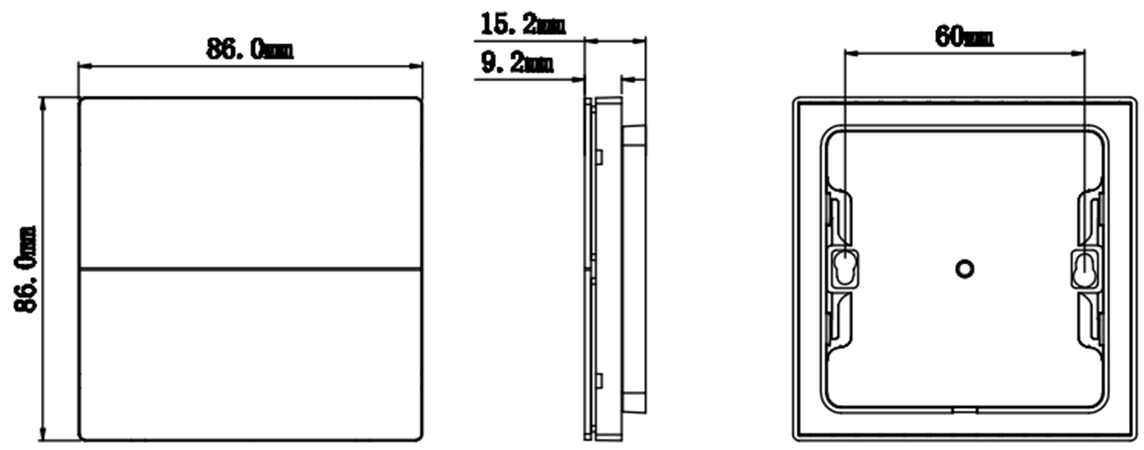
Certifications	• CE

Panel smart function

Dimming:

Tap the dim down button:chosen preset goes to 0%.

Tap the dim up button:chosen preset goes to it’s original brightness.

Hold on the dim down or dim up button:smooth dimming of last chosen preset.

Preset buttons:

Tap: The chosen preset will turn on.

Tap again: The chosen preset will turn off.

Color temperature buttons:

Hold the color temperature button:changes colour temperature smoothly.

Tap the left color temperature button:changes to the warmest colour temperature.

Tap the right color temperature button:changes to the coldest colour temperature.

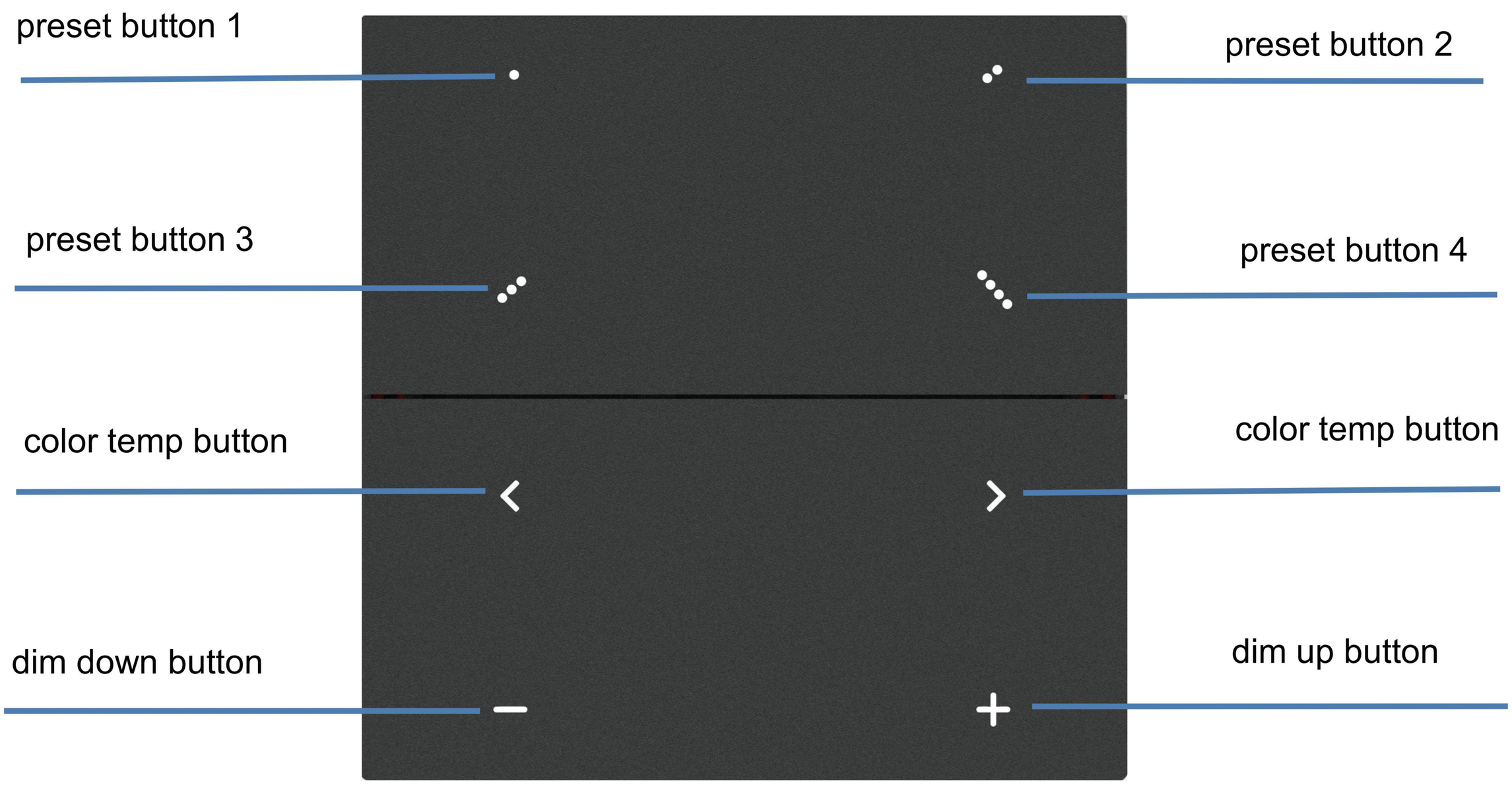

LED indications

On preset buttons(when any 2 preset buttons be pressed):

If the device is paired: white LEDs stays on 20s.

If the device is unpaired: white LEDs flashes through the buttons for 20s.

On preset buttons(when dimming or multipurpose button be pressed):

If the device is paired: white LEDs stays on 5s on the last chosen preset.

Pair the device into network

Step 1: To pair VBA-RCS8, press any 2 preset buttons (for example, buttons 1 and 3), then it will be seen in “nearby devices”.

Step 2: If it is unpaired, pair it into your desired network before the white LEDs off.

Step 3: If it is paired in others’ network, unpair it first (follow the steps in Figure 1), tap “unpair device”→”Start” in the app, when the progress bar appears, tap any one of the button, then unpaired success. Repeat step 2 to pair it into network.

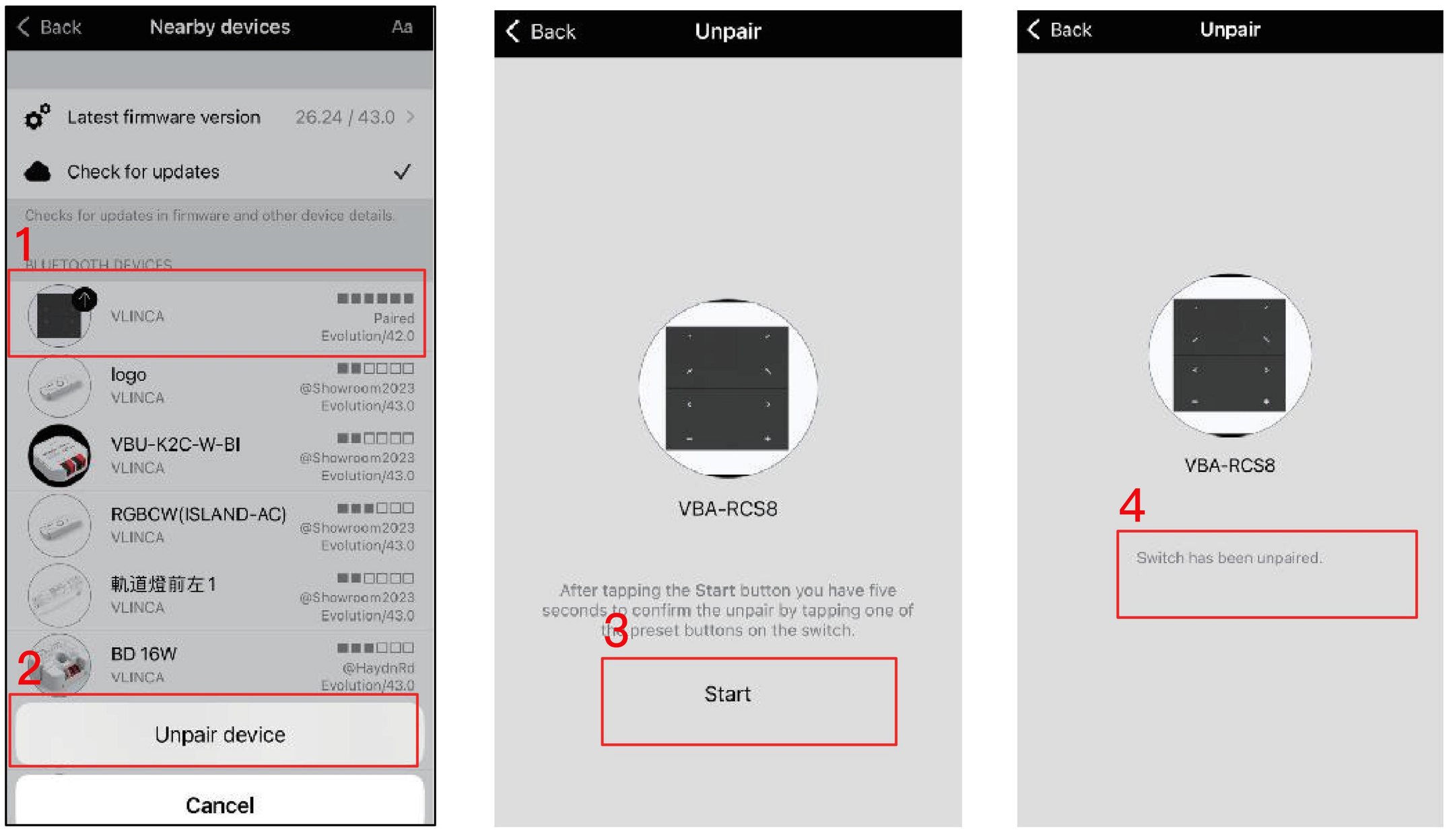

Figure 1

Electrical information

After the device is paired into network, it will now be visible in the Switches tab. Press any key, the remaining power of the device will display(as in Figure 2).

Note:The remaining power is for reference only.

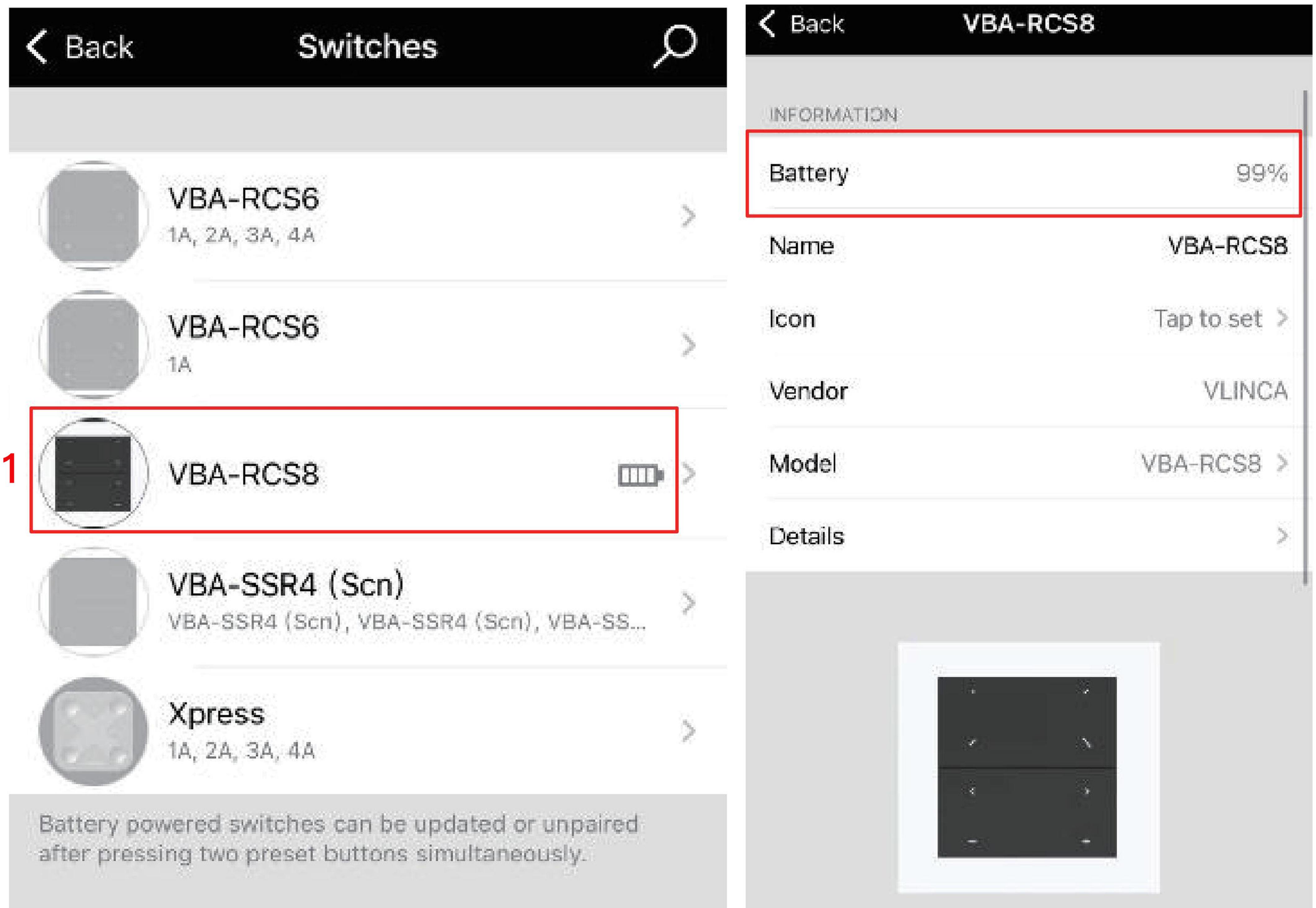

Figure 2

Configure VBA-RCS8

Configuration example:configure 4 preset buttons to control 4 scenes.

Configure button 1&2&3&4 to control 4 scenes, as in Figure 3.

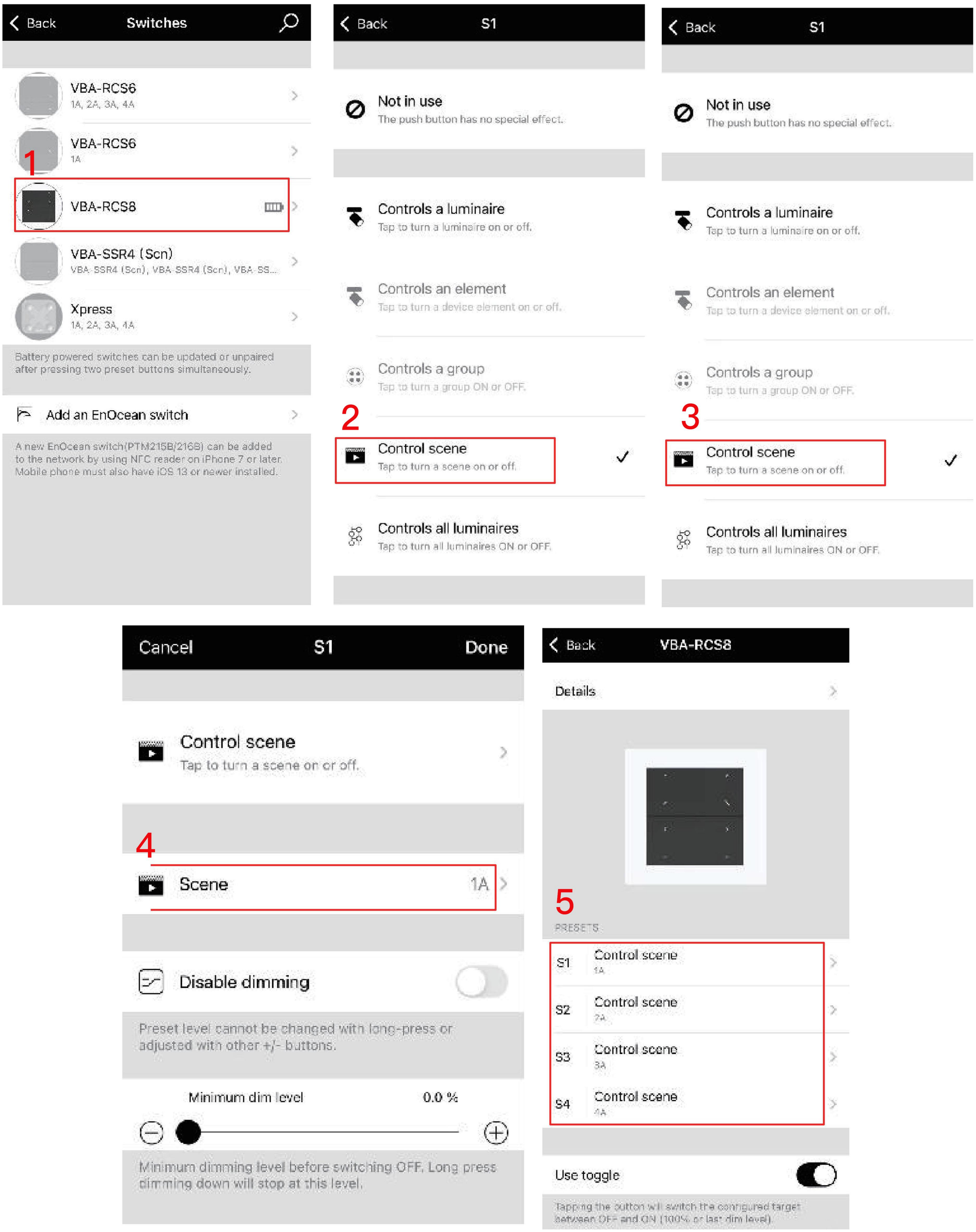

Figure 3

Battery replacement

Unscrew the screw, slide and remove back cover, and replace the old battery. The battery type is CR2430. Always replace the battery with the same type, reinstall the battery lid cover. Properly dispose of the old battery at your nearest hazardous waste collection site.

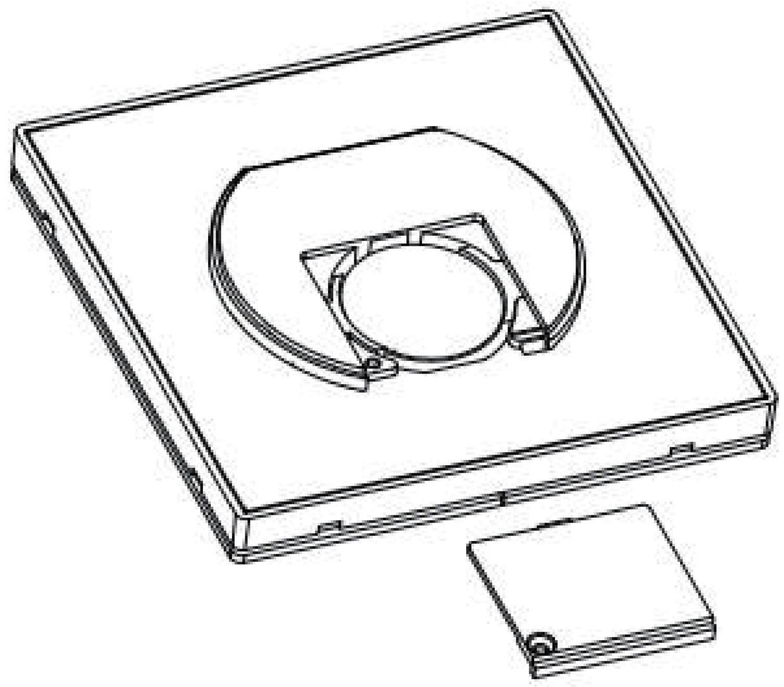

DISPOSAL INSTRUCTIONS In line with EU

Directive 2012/19/EU for waste electrical and electronic equipment (WEEE),this electrical product must not be disposed of as unsorted municipal waste. Please dispose of this product by returning it to the point of sale or to local municipal collection point for recycling.

COMPLIANCE STATEMENT

VLINCA declares that the VBA-RCS8 fully complies with Directive 2014/53/EU.

Revision record

Version	Remark	Revision date
V1.0	Newly formulate	August 30, 2024