montage instructies

Manual

GUNNI

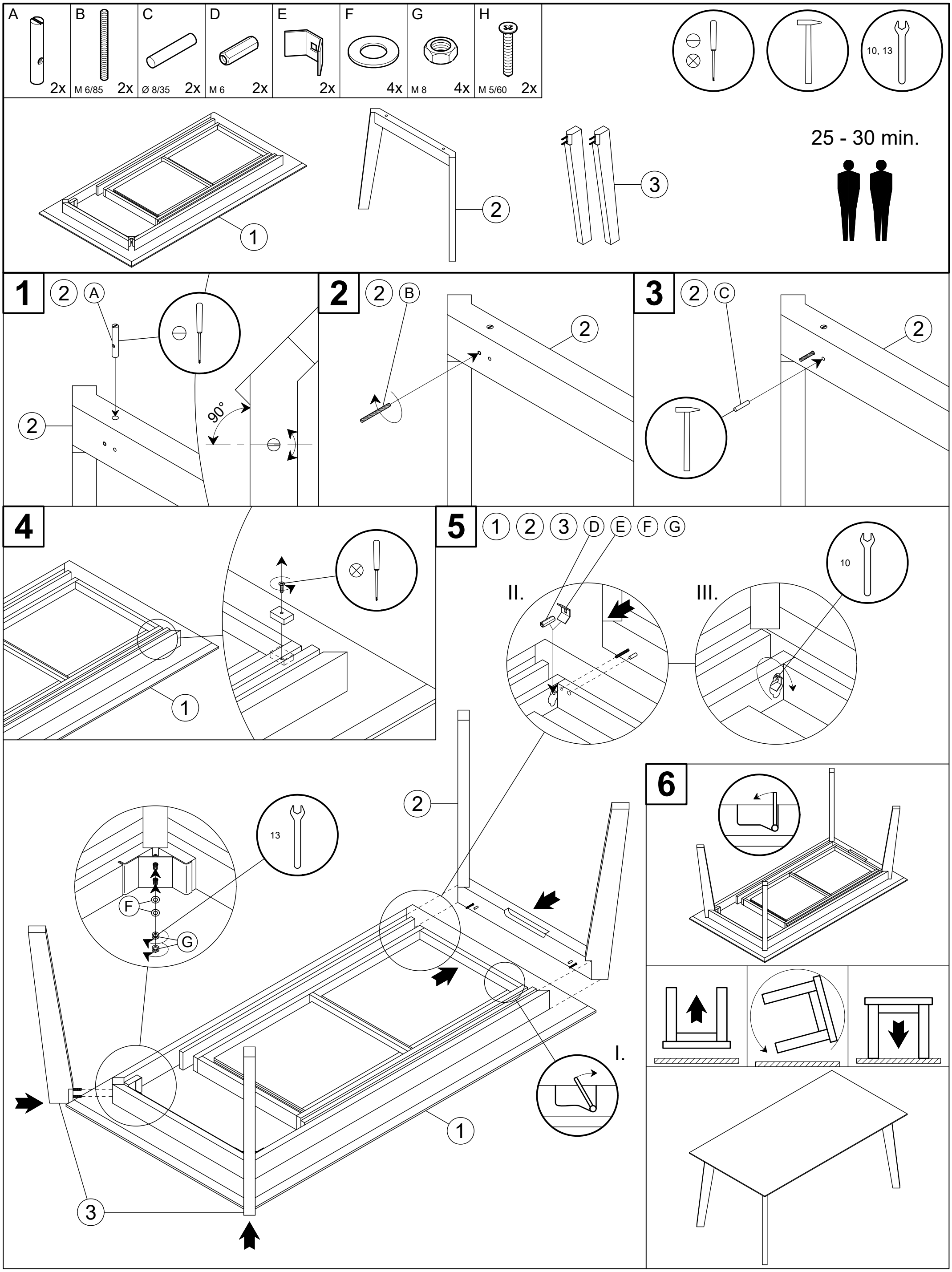

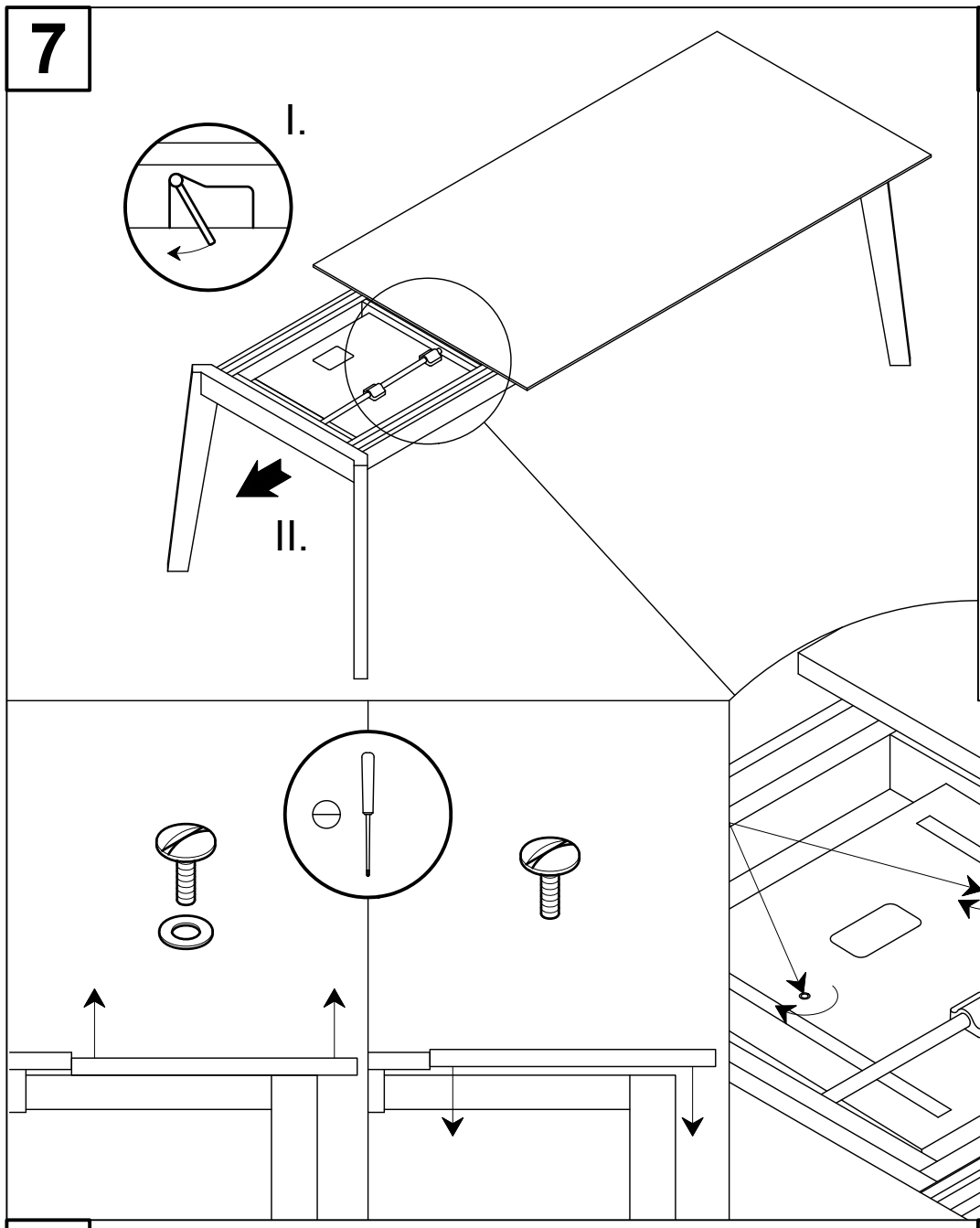
7
I.
II.

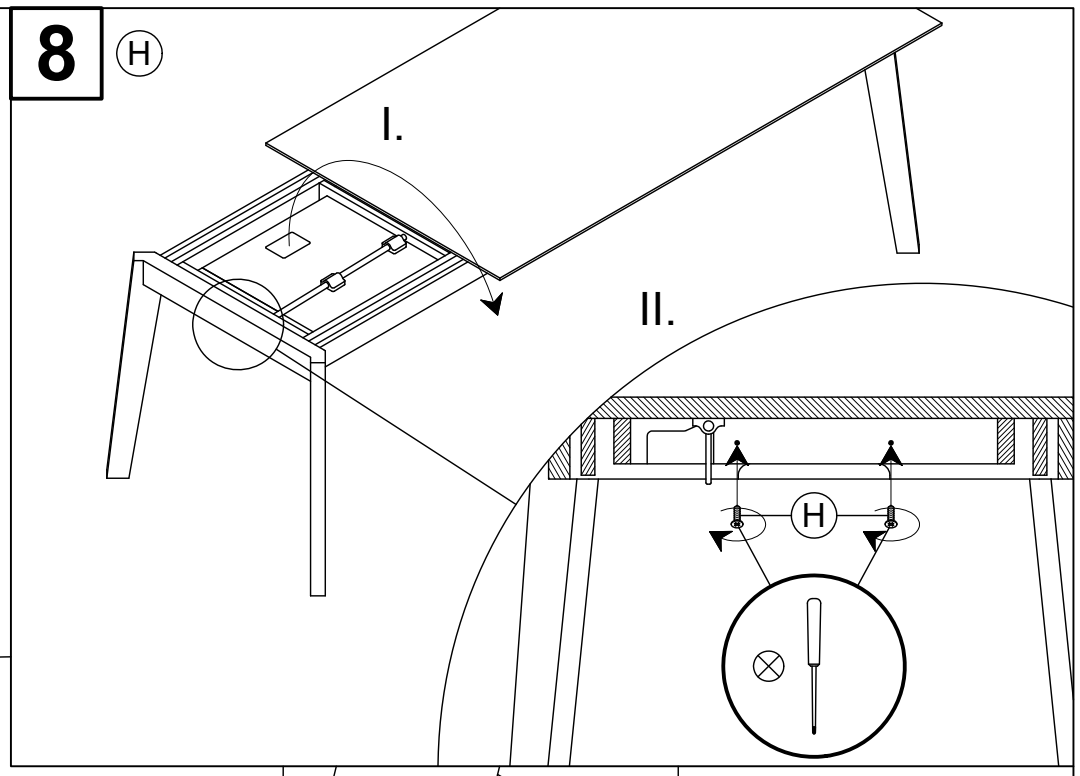
8
H
I.
II.
H

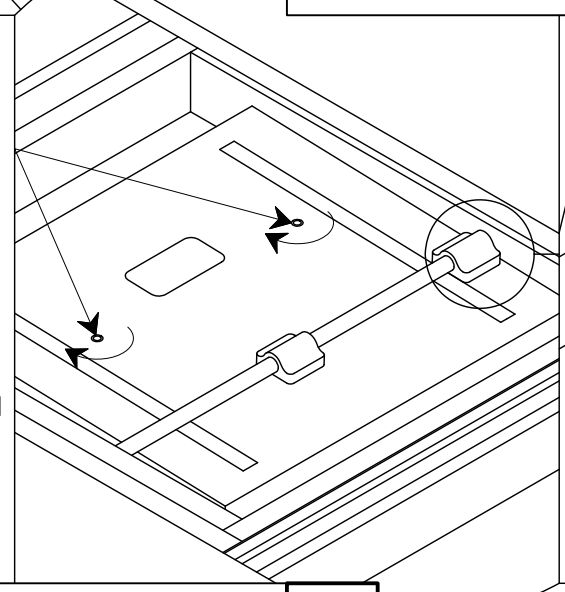

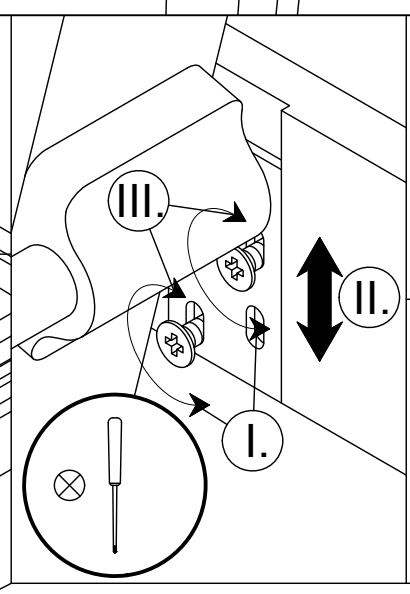
III.
II.
I.

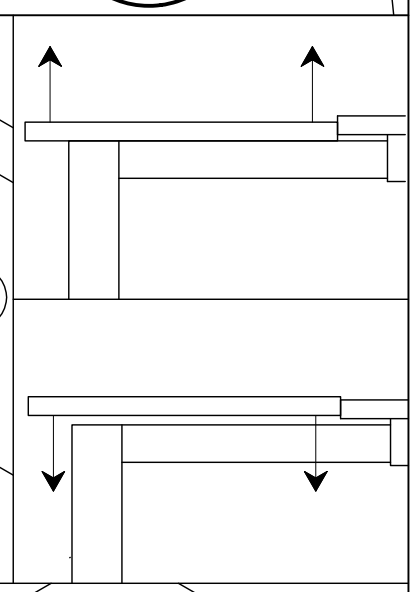

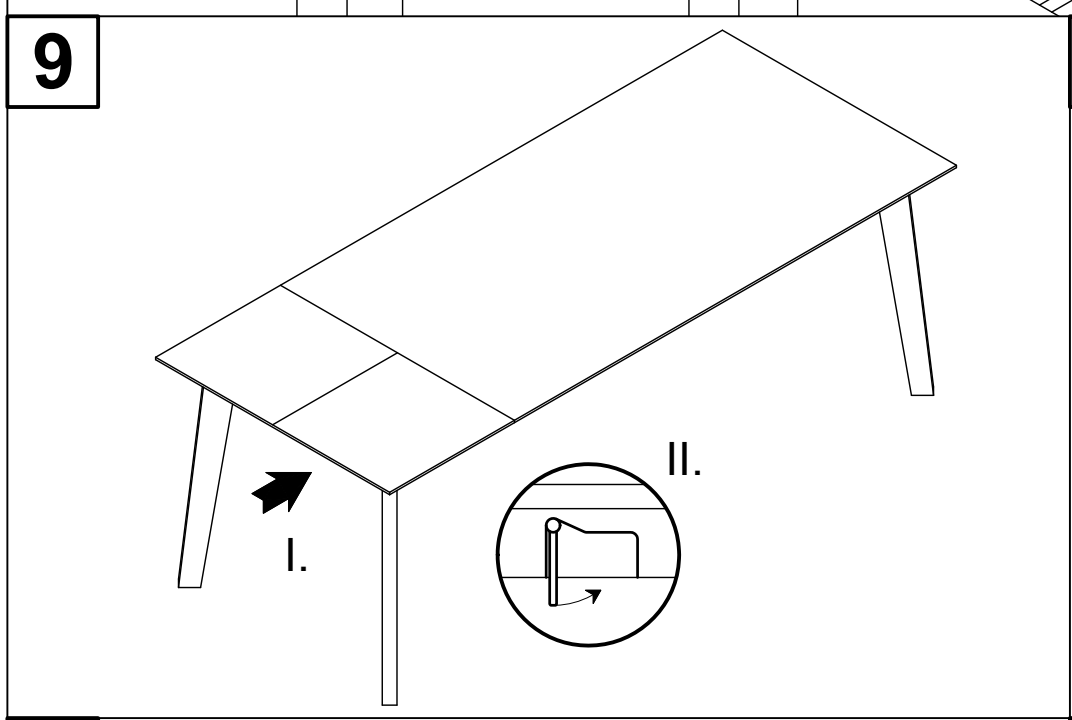
9
I.
II.

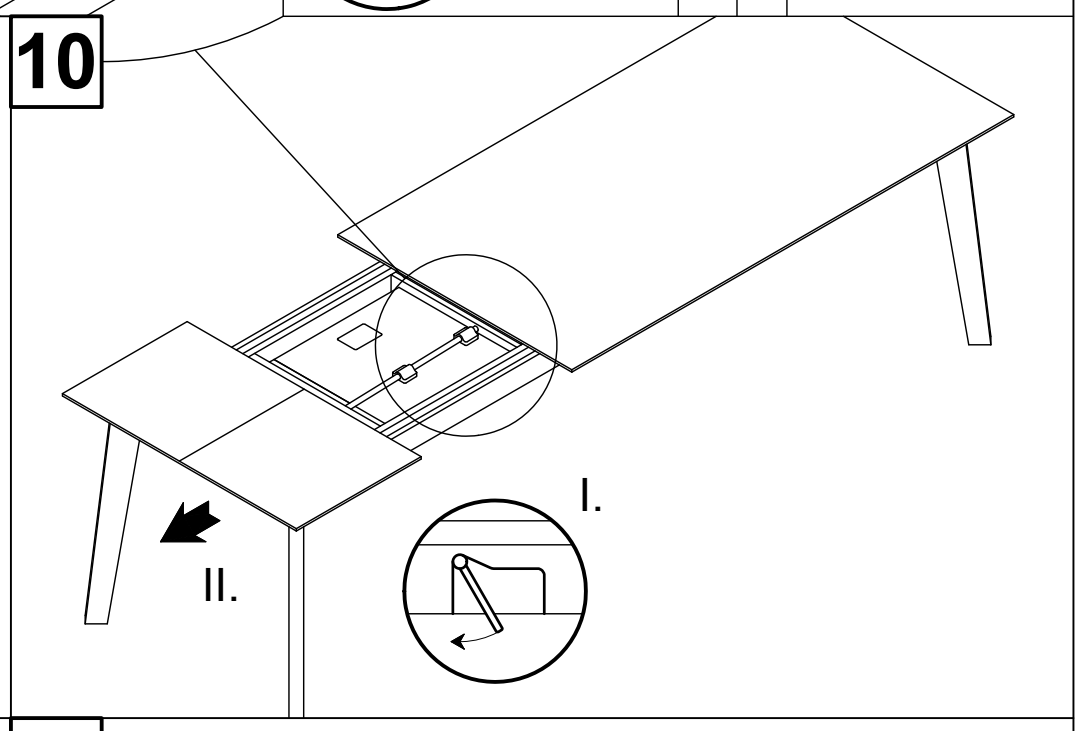
10
I.
II.

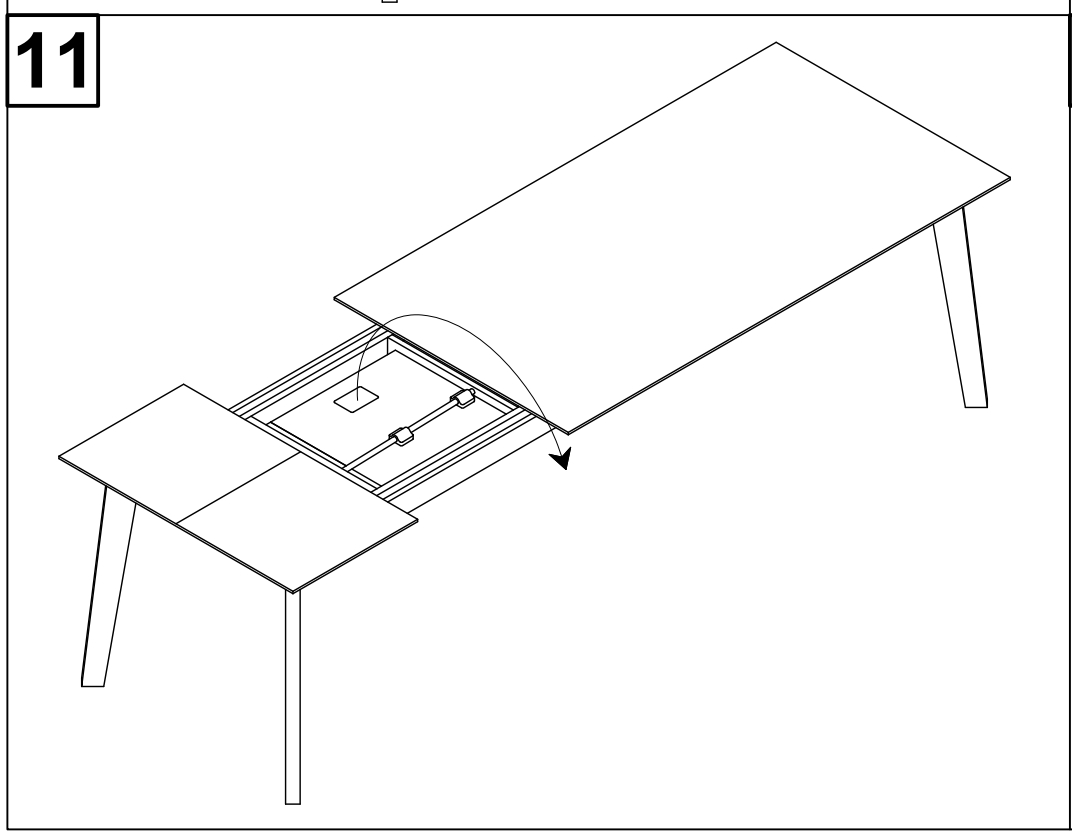
11

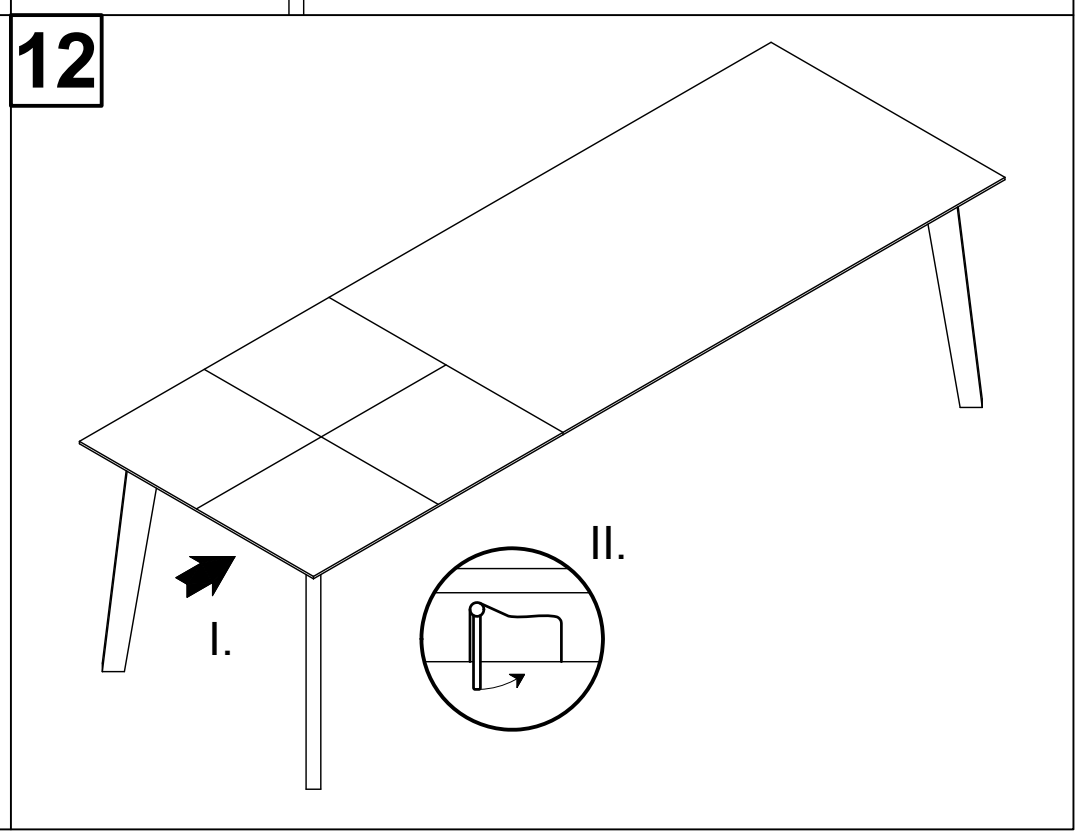
12
I.
II.