RECAMBIOS MARINOS



MERCURY
MARINER

JOHNSON
EVINRUDE

FORCE

RECAMBIOS MARINOS

REPUESTOS
HERRAMIENTAS
LUBRICANTES
PINTURAS

SPARE PARTS
TOOLS
LUBRICANTS
PAINTS

RICAMBI
ATTREZI
LUBRIFICANTI
VERNICI

2019-2020

FUERABORDA
OUTBOARD
FUORIBORDO

MERCURY
MARINER

JONHNSON
EVINRUDE

FORCE

2019-2020

FUERABORDA
OUTBOARD
FUORIBORDO

REPUESTOS
HERRAMIENTAS
LUBRICANTES
PINTURAS

SPARE PARTS
TOOLS
LUBRICANTS
PAINTS

RICAMBI
ATTREZI
LUBRIFICANTI
VERNICI

℗ 019. El contenido de este catálogo es propiedad de Recambios Marinos S.L.
℗ 019. The contents of this catalogue is property of Recambios Marinos S.L.
℗ 019. Il contenuto di questo catalogo é proprietá di Recambios Marinos, S.L.



60HP 50HP 40HP 40HP PRO 4 stroke EFI Solo Italia Only Italy 30HP

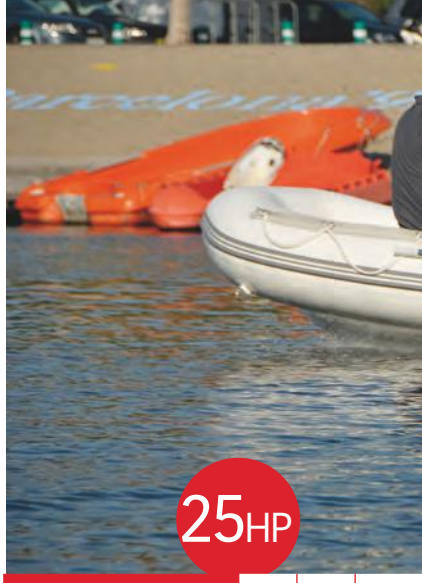

25HP

GAMA media	F60FEL-T-EFI	F50FEL-T-EFI	F40FWL-T	F40FWL-T-PRO	F30FWL-T
Largo total (mm) / Overall length (mm) / Lunghezza totale (mm)	713 (28")	713 (28")	768 (30.2")	713 (28")	768 (30.2")
Ancho total (mm) / Overall width (mm) / Larghezza totale (mm)	427 (16.8")	427 (16.8")	410 (16.1")	427 (16.8")	410 (16.1")
Alto total (mm) / Overall height (mm) / Altezza totale (mm)	1.435 (56.5")	1.435 (56.5")	1.361 (53.6")	1.435 (56.5")	1.361 (53.6")
Longitud cola (mm) / Transom height (mm) / Lunghezza piede (mm)	508 (20")				
Peso (kg) / Weight (kg) / Peso (kg)	113 kg	113 kg	96.6 kg	113 kg	96.6 kg
Régimen de trabajo a pleno gas / Full throttle operating range / Regime di lavoro a tutto gas	5.000 – 6.000 rpm				
Potencia máxima / Maximum output / Potenza massima	44.1 Kw 60 Hp 5500rpm	36.8 Kw 50 Hp 5500rpm	29.4 Kw 40 Hp 5500 rpm	29.4 Kw 40 Hp 5500rpm	22.05 Kw 30 Hp 5500rpm
Ralentí (neutral) / Idling speed (neutral) / Minimo (neutral)	750 - 850 rpm	750 - 850 rpm	850 - 950 rpm	750 - 850 rpm	850 - 950 rpm
Tipo motor / Engine type / Tipo motore	SOHC (8 valves)	SOHC (8 valves)	OHC	SOHC (8 valves)	OHC
Cilindros / Cylinders / Cilindri	L4	L4	L3	L4	L3
Cilindrada / Displacement / Cilindrata	996 cm^3	996 cm^3	747 cm^3	996 cm^3	747 cm^3
Diámetro por carrera / Bore per stroke / Diametro corsa	65.0 mm x 75.0 mm (2.56" x 2.95")				
Sistema de encendido / Ignition system / Sistema di accensione	CDI				
Sistema de control / Control system / Sistema di controllo	Remoto / Remote / A distanza				
Sistema de arranque / Starting system / Sistema di avviamento	Eléctrico / Electric (Turn – key) / Elettrico		Eléctrico / Electric / Elettrico	Eléctrico / Electric (Turn – key) / Elettrico	
Cambio de marchas / Gear positions / Cambio di marcia	Avante - Neutro - Atrás / Forward - Neutral - Reverse / Avanti - Neutro - Retromarcia				
Relación engranajes / Gear ratio / Relazione ingranaggio	1.85 (24/13)	1.85 (24/13)	2.08 (26/13)	1.85 (24/13)	2.08 (26/13)
Sistema inclinación y elevación / Trim & tilt system / Sistema inclinazione e altezza regolabili	Eléctrico. Trim / Electric. Trim / Elettrico. Trim		Eléctrico / Electric / Elettrico		
Depósito combustible / Fuel tank capacity / Serbatoio combustibile	24L				
Consumo máximo / Maximum fuel waste / Consumo massimo	20 L/h	18.5 L/h	13.8 L/h	18.5 L/h	13 L/h
Capacidad aceite motor / Engine oil capacity / Capacità olio	2.5L	2.5L	1.7 L	2.5L	1.7L
Capacidad aceite caja engranajes / Gear oil capacity / Capacità olio, scatola ingranaggi	430 cm^3				
Hélice STD / STD Propeller / Elica STD	3-$11^{1/2}$ x 13"	3-$11^{1/2}$ x 13"	3-$11^{1/8}$ x 13"	3-$11^{1/2}$ x 13"	3-$11^{1/8}$ x 13"

GAMA ligera	F25BML	F25BMS	F25BWL	F25BWS	F25FWL	F25FWS	F25FWL-T
Largo total (mm) / Overall length (mm) / Lunghezza totale (mm)	1.151 (45.3")				703 (27.7")		
Ancho total (mm) / Overall width (mm) / Larghezza totale (mm)	430 (16.9")				376 (14.8")		
Alto total (mm) / Overall height (mm) / Altezza totale (mm)	1.280 (50.4")	1.153 (45.4")	1.280 (50.4")	1.153 (45.4")	1.280 (50.4")	1.153 (45.4")	1.280 (50.4")
Longitud cola (mm) / Transom height (mm) / Lunghezza piede (mm)	508 (20")	381 (15")	508 (20")	381 (15")	508 (20")	381 (15")	508 (20")
Peso (kg) / Weight (kg) / Peso (kg)	68	66	70	68	70	68	74
Régimen de trabajo a pleno gas / Full throttle operating range / Regime di lavoro a tutto gas							
Potencia máxima / Maximum output / Potenza massima	18.4 Kw 25 Hp 5.000 rpm						
Ralentí (neutral) / Idling speed (neutral) / Minimo (neutral)	925 - 1.025 rpm						
Tipo motor / Engine type / Tipo motore							
Cilindros / Cylinders / Cilindri							
Cilindrada / Displacement / Cilindrata	498 cm^3						
Diámetro por carrera / Bore per stroke / Diametro corsa	65 x 75 mm (2.56"x 2.95")						
Sistema de encendido / Ignition system / Sistema di accensione							
Sistema de control / Control system / Sistema di controllo	Manual popero / Tiller control / Comando a guida				Remoto / Remote / A distanza		
Sistema de arranque / Starting system / Sistema di avviamento	Manual / Manual / Manuale		Eléctrico / Electric / Elettrico				
Cambio de marchas / Gear positions / Cambio di marcia							
Relación engranajes / Gear ratio / Relazione ingranaggio	2.08 (27/13)						
Sistema inclinación y elevación / Trim & tilt system / Sistema inclinazione e altezza regolabili	Manual / Manual / Manuale						Eléctrico / Electric / Elettrico
Depósito combustible / Fuel tank capacity / Serbatoio combustibile	24 L						
Consumo máximo / Maximum fuel waste / Consumo massimo	9.2 L/h						
Capacidad aceite motor / Engine oil capacity / Capacità olio	1.7 L						
Capacidad aceite caja engranajes / Gear oil capacity / Capacità olio, scatola ingranaggi	320 cm^3						
Hélice STD / STD Propeller / Elica STD	3-$9^{7/8}$ x $11^{1/4}$"						

BMS Eje corto, arranque manual / Short shaft -manual start / Asse corto, avviamento manuale.
BML Eje largo, arranque manual / Long shaft - manual start / Asse lungo, avviamento manuale.
FWS Eje corto, arranque eléctrico / Short shaft - Electric start / Asse corto, avviamento elettrico.
FWL Eje largo, arranque eléctrico / Long shaft - Electric start / Asse lungo, avviamento elettrico.
BWS Eje corto, arranque eléctrico, mando popero / Short shaft - Electric start - Tiller control / Asse corto, avviamento elettrico, Comando a guida.
BWL Eje largo, arranque eléctrico, mando popero / Manual Long shaft - Electric start - Tiller control / Asse lungo, avviamento elettrico, Comando a guida.



PARSUN OUTBOARDS

20HP				15HP						9.8HP		8HP		6HP		5HP		4HP		2.6HP	
F20ABML	F20ABMS	F20ABWL F20EBWL-EFI	F20EBWS-EFI	F20EFWL-EFI	F20EFWS-EFI	F15ABML	F15ABMS	F15ABWL	F15ABWS	F15AFWL	F15AFWS	F9.8BML	F9. 8BMS	F8BML	F8BMS	F6ABML	F6ABMS	F5BML	F5BMS	F4BML	F4BMS	F2.6BML	F2.6BMS
988 (38.9")				665 (26.2")		988 (38.9")				665 (26.2")		965 (38")		965 (38")		718 (28.2")		717 (28.2")		717 (28.2")		645 (25.4")	
420 (16.5")				430 (16.9")		420 (16.5")				430 (16.9")		364 (14.3")		364 (14.3")		390 (15.4")		361 (14.2")		361 (14.2")		343 (13.5 ")	
1.197 (47.1")	1.070 (42.1")	1.197 (47.1")	1.070 (42.1")	1.197 (47.1")	1.070 (42.1")	1.197 (47.1")	1.070 (42.1")	1.197 (47.1")	1.070 (42.1")	1.197 (47.1")	1.070 (42.1")	1.166 (45.9")	1.039 (40.9")	1.166 (45.9")	1.039 (40.9")	1.177 (46.3")	1.050 (41.3")	1.156 (45.5")	1.029 (40.5")	1.156 (45.5")	1.029 (40.5")	1.140 (44.9")	1.013 (39.9")
508 (20.0")	381 (15")	508 (20")	381 (15")	508 (20.0")	381 (15")	508 (20.0")	381 (15")	508 (20.0")	381 (15")	508 (20.0")	381 (15"	508 (20.0")	381 (15")	508 (20")	381 (15")	508 (20.0")	381 (15")	508 (20.0")	381 (15")	508 (20.0")	381 (15")	508 (20.0")	381 (15")
53.7	51.7	55.7	53.7	54.7	52.7	53.7	51.7	55.7	53.7	54.7	52.7	39.5	38	39.5	38	28	27	25.5	24.5	25.5	24.5	18	17
5.000 - 6.000 rpm												5.000 - 6.000 rpm				4.500 - 5.000 rpm						5.250 - 5.750 rpm	
14,7 Kw (20 Hp) 5.500 rpm						11 Kw (15 Hp) 5.500 rpm				11 Kw (15 Hp) 5.500 rpm		7.2 Kw (9.8 Hp)		5.9 Kw (8 Hp)		4.4 Kw (6 Hp) 5.000 rpm		3.6 Kw (5 Hp) 5.000 rpm		2.9 Kw (4 Hp) 4.500 rpm		1.9 Kw (2.6 Hp) 5.500 rpm	
1.000 - 1.100 rpm						1.000 - 1.100 rpm						900 - 1.000 rpm		900 - 1.000 rpm		1.450 - 1.550 rpm		1.450 - 1.550 rpm		1.450 - 1.550 rpm		1.800 - 2.000 rpm	
OHC												OHC		OHC		OHV		OHV		OHV		OHV	
L2												L2		L2		1		1		1		1	
362 cm^3												209 cm^3		209 cm^3		148 cm^3		112 cm^3		112 cm^3		72 cm^3	
63.0 x 58.1 mm (2.48" x 2.29")						63.0 x 58.1 mm (2.48" x 2.29")				63.0 x 58.1 mm (2.48" x 2.29")		55 x 44 mm (2.17" x 1.73")		55 x 44 mm (2.17" x 1.73")		64 x 46 mm (2.52" x 1.8")		59 x 41 mm (2.32" x 1.61")		59 x 41 mm (2.32" x 1.61")		54 x 31.5 mm (2.13" x 1.24")	
CDI																		TCI					
Manual popero Tiller control Comando a guida				Remoto Remote A distanza		Manual popero Tiller control Comando a guida		Eléctrico popero Electric tiller control Comando elettrico		Remoto Remote A distanza		Manual popero Tiller control Comando a guida											
Manual Manual Manuale		Eléctrico Electric Elettrico				Manual Manual Manuale		Manual / eléctrico Manual / electric Manuale / elettrico		Eléctrico Electric Elettrico		Manual Manual Manuale											
Avante - Neutro - Atrás Forward - Neutral - Reverse Avanti - Neutro - Retromarcia																						Avante - Neutro Forward - Neutral Avanti - Neutro	
2.08 (27/13) EFI 1.85 (24/13)						2.08 (27/13)				2.08 (27/13)		2.08 (27/13)		2.08 (27/13)		2.15 (28/13)		2.08 (27/13)		2.08 (27/13)		2.25 (27/12)	
												Manual Manual Manuale											
24 L						24 L						12 L		12 L		Integrado 1.3 L Integral 1.3 L Integrato 1.3 L		Integrado 1.3 L Integral 1.3 L Integrato 1.3 L		Integrado 1.3 L Integral 1.3 L Integrato 1.3 L		Integrado 1.2 L Integral 1.2 L Integrato 1.2 L	
6.9 L/h						5.4 L/h				5.4 L/h		3.4 L/h		2.8 L/h		2.3 L/h		2 L/h		1.6 L/h		1.1 L/h	
1.6 L						1.6 L				1.6 L		0.8 L		0.8 L		0.6 L		0.5 L		0.5 L		0.35 L	
250 cm^3						250 cm^3				250 cm^3		320 cm^3		320 cm^3		100 cm^3		100 cm^3		100 cm^3		75 cm^3	
3-9$^{1/4}$" x 11"						3-9$^{1/4}$" x 11"						3-8.9" x 8.3"		3-8.9" x 8.3"		3-7$^{1/8}$" x 9"		3-7$^{1/2}$" x 7"		3-7$^{1/2}$" x 7"		3-7$^{1/2}$" x 6"	

CHINESE OUTBOARDS S.L.U

RECAMBIOS MARINOS

CENTROS DE DISTRIBUCIÓN
CENTERS OF DISTRIBUTION
I CENTRI DI DISTRIBUZIONE



ALBANIA
ALEMANIA GERMANY
ALGERIA ALGERIE
ANDORRA
AUSTRALIA
BÉLGICA BELGIUM
BULGARIA
CROATIA CROATIA
DINAMARCA DENMARK
ESPAÑA SPAIN
ESTONIA
FINLANDIA FINLAND
FRANCIA FRANCE
GRECIA GREECE
INDIA
IRLANDA IRELAND
ITALIA ITALY
LETONIA LATVIA
LITUANIA LITHUANIA
MALTA
MARRUECOS MOROCCO
MONTENEGRO
HOLANDA NETHERLANDS
NORUEGA NORWAY
PORTUGAL
ROMANIA
RUSIA
SERBIA
ESLOVAQUIA SLOVAKIA
TURQUÍA TURKEY
UCRANIA UKRAINE
REINO UNIDO UNITED KINGDOM

• MERCURY — REF --> R.O. / OEM — 62 / 242

• JOHNSON — REF --> R.O. / OEM — 260 / 377

• FORCE — REF --> R.O. / OEM — 390 / 393

ÍNDICE ACCESORIOS	ACCESSORIES TABLE OF CONTENTS	INDICE ACCESSORI	
TX MARINE	TX MARINE	TX MARINE	6
FUSIBLES Y PORTAFUSIBLES	FUSES & FUSE BLOCKS	FUSIBILI E PORTAFUSIBILI	10
DEPÓSITOS COMBUSTIBLE	FUEL TANKS	SERBATOIO CARBURANTE	10
CONECTORES GASOLINA	FUEL FITTINGS	ATTACCHI BENZINA	11
BOMBAS COMBUSTIBLE	PRIMER BULB	POMPA BENZINA	13
VÁLVULAS	VALVE	VALVOLA	14
FILTROS GASOLINA	FUEL FILTERS	FILTRO BENZINA	14
ACCESORIOS Y PINTURAS	ACCESSORIES & SPRAY PAINTS	ACCESORI E PITTURE	17
MANTENIMIENTO DE MOTORES	ENGINE MAINTENANCE	MANUTENZIONE MOTORE	18
LUBRICANTES	LUBRICANTS	LIBRIFICANTI	20
HERRAMIENTAS	TOOLS	ATTREZZI	26
BUJÍAS	SPARK PLUGS	CANDELE	37
INTERRUPTORES	CUT OFF SWITCHES	INTERRUTORI	38
LLAVES DE ARRANQUE	IGNITION STARTER SWITCHES	CHIAVE DI AVVIAMETO	38
ACCESORIOS DIRECCIÓN	STEERING ACCESSORIES	ACCESSORI DIREZIONE	40
ESTABILIZADORES	HYDROFOILS	STABILIZZATORI	42
POWER TRIM-LIFT	POWER TRIM-LIFT	POWER TRIM-LIFT	43
MANDOS	ENGINE CONTROL	COMANDI	44
CABLES MANDOS	CONTROL CABLES	CAVI COMANDO	51
CABLES ACCESORIOS	CABLES ACCESSORIES	CAVI ACCESSORI	53
DIRECCIONES	STEERING CONTROL	TIMONERIE	54
ACCESORIOS DIRECCIÓN Y FUNDAS	STEERING AND COVERS ACCESSORIES	ACCESSORI TIMONERIA E COPERTURA	60

IMPORTANTE

LOS PRODUCTOS QUE APARECEN EN NUESTROS CATALOGOS SON VÁLIDOS Y COMPATIBLES CON LOS MOTORES Y TRANSMISIONES DE LAS MARCAS ORIGINALES QUE APARECEN EN CADA SECCIÓN. EN ALGUNOS CASOS TAMBIÉN SUMINISTRAMOS RECAMBIOS ORIGINALES. ESTA INFORMACIÓN APARECE CON LA REFERENCIA EN EL MOMENTO DE CONFIRMAR EL PEDIDO POR NUESTRA WEB.
LA IMÁGENES AQUÍ CONTENIDAS PUEDEN NO CORRESPONDER CON TOTAL PRECISIÓN AL PRODUCTO SUMINISTRADO. RECAMBIOS MARINOS, S.L. SE RESERVA EL DERECHO DE ANULAR O CAMBIAR PRODUCTOS SIN PREVIO AVISO.

IMPORTANT

THE PRODUCTS THAT APPEAR IN OUR CATALOGS ARE VALID AND COMPATIBLE WITH THE MOTORS AND TRANSMISSIONS OF THE ORIGINAL BRANDS THAT APPEAR IN EACH SECTION. IN SOME CASES WE ALSO SUPPLIED ORIGINAL SPARE PARTS. THIS INFORMATION APPEARS WITH THE REFERENCE AT THE TIME OF CONFIRMING THE ORDER BY OUR WEB.
IMAGES CONTAINED HERE MAY NOT CORRESPOND WITH TOTAL ACCURACY TO THE PRODUCT SUPPLIED. RECAMBIOS MARINOS, S.L. RESERVES THE RIGHT TO CANCEL OR CHANGE PRODUCTS WITHOUT PRIOR NOTICE.

IMPORTANTE

I PRODOTTI CHE COMPAIONO NEI NOSTRI CATALOGHI SONO VALIDI E COMPATIBILI CON I MOTORI E LE TRASMISSIONI DEI MARCHI ORIGINALI CHE APPAIONO IN OGNI SEZIONE. IN ALCUNI CASI ABBIAMO FORNITO ANCHE RICAMBI ORIGINALI. QUESTA INFORMAZIONE RISULTA CON IL RIFERIMENTO AL MOMENTO DELLA CONFERMA DELL'ORDINE DA PARTE DEL NOSTRO WEB.
LE IMMAGINI QUI CONTENUTE POTREBBERO NON CORRISPONDERE ESATTAMENTE AL PRODOTTO FORNITO. RECAMBIOS MARINOS, S.L., SI RISERVA IL DIRITTO DI CANCELLARE O MODIFICARE I PRODOTTI SENZA PREAVVISO.



AXONE NEMO
La primera diagnosis Smart en el mundo

Axone Nemo es un potente tablet diseñado para asegurar al mecánico un óptimo uso, tanto en el entorno de taller, como en las intervenciones en el exterior.
Permite efectuar operaciones de diagnosis a gran velocidad. El chasis de magnesio le proporciona una mayor robustez y rigidez ante los golpes, muy ligero con gran capacidad de disipación de la temperatura interna.
El software operativo IDC5 destaca todas sus características, además del "touch gesture" para alcanzar en poco tiempo las funciones deseadas.

AXONE NEMO
The first Smart diagnosis in the world

Axone Nemo is a powerful tablet designed to ensure the mechanic optimal use, both in the workshop environment, as interventions abroad.
It allows to carry out diagnosis operations at high speed. The magnesium chassis provides greater robustness and rigidity against shock, very light with great capacity to dissipate the internal temperature.
The IDC5 operating software highlights all its features, in addition to the "touch gesture" to reach the desired functions in a short time.

AXONE NEMO
La prima diagnosi Smart nel mondo

Axone Nemo è un potente tablet creato per assicurare al meccanico un ottimo uso, sia nelle officine sia negli interventi all'esterno.
Permette di effettuare operazioni di diagnosi a gran velocità. La scocca in magnesio gli dona una maggior robustezza contro i colpi, molto leggero..
Il software operativo IDC5 evidenzia tutte le sue caratteristiche, come il "touch gesture" per eseguire in poco tempo le funzioni desiderate..

PANTALLA	**SCREEN**	**SCREEN**	12" (2160 x 1440)
PROCESADOR	**PROCESSOR**	**PROCESSORE**	Intel Quad Core N3160
RAM	**RAM**	**RAM**	8 GB
MEMORIA	**MEMORY**	**MEMORIA**	250 GB
WIFI Doble canal	**WIFI** Double channel	**WIFI** doppio canale	Doble canal
BLUETOOTH			4.0 Low Energy
2 CÁMARAS	**2 CAMERA**	**2 FOTOCAMERE**	5 Megapixels

SOFTWARE IDC5

IDC5 es la última evolución de TEXA, gracias a la reescritura del código se incrementa la velocidad de trabajo, lo que garantiza una entrada de comunicación con la centralita casi inmediata. La nueva función "Esquemas eléctricos interactivos" permite consultar los esquemas eléctricos aprovechando las animaciones de los dispositivos implicados y generando un mapa interactivo con flujos de señales entrada o salida de centralitas.

SOFTWARE IDC5

IDC5 is the latest evolution of TEXA, thanks to the rewriting of the code the working speed is increased, which guarantees a communication input with the control unit almost immediately. The new function "Interactive electrical diagrams" allows consulting the electrical diagrams taking advantage of the animations of the devices involved and generating an interactive map with flows of signals input or output of control units.

SOFTWARE IDC5

IDC5 è l'ultima evoluzione di TEXA, grazie ai nuovi aggiornamenti, si incrementa la velocità di lavoro, che garantisce la comunicazione quasi immediata con l'unità di controllo. . La nuova funzione "Diagrammi interattivi elettronici" permettono di consultare i diagrammi elettronici con l'animazione dei led generando una mappa interattiva con un flusso di segnali in entrata e in uscita della centralina.



Ref.			
RECAXONENEMO	Axone Nemo		
RECD06591	Navigator TXB Evolution		
RECD127X0	Axone Nemo + Navigator TXB Marine		
RECZ06590PC	Navigator TXB + PC	Navigator TXB + Labtop	
REC3901775	Kit maleta para guardar cables de interface	Hand case for harnesses	Kit per cavi intergaccia
RECAGA00M1	Contrato de actualización software (y renovación anual).	Software contract and annual renovation	Contratto software (e rinnovo annuale).

TEXA

NAVIGATOR TXB EVOLUTION & AXONE NEMO / PC





NEW

SRAM	SRAM	SRAM	16Mb
MEMORIA	MEMORY	MEMORIA	NAND Flash 8 GB
BLUETOOTH			

NAVIGATOR TXB EVOLUTION

The evolution of the diagnosis, designed and developed specifically for the marine environment.

The characteristics of the hardware make it compatible with all currently existing protocols, its integrated 16-pole CPC connector, allows the use of all diagnostic cables. It is compatible with AXONE NEMO and PC. Thanks to Bluetooth technology, the technician can make a comfortable diagnosis without wires, even from the jetty.
Extremely powerful, they allow the mechanic to easily manage the map files. The CAN standards supported include the possibility of CAN single wire management and a further CAN controller for the diagnosis of more networks.
It allows the recording of the diagnosis session in “dynamic tests” mode, that is to say with the boat in motion, to locate specific faults that could not be verified in the mooring. The interface reconstructs a complete panorama of the situation in which the anomaly has been verified, providing important elements of analysis to identify the causes of the failure.

NAVIGATOR TXB EVOLUTION

La evolución de la diagnosis, diseñado y desarrollado especificamente para el ambiente Marino.

Las características del hardware lo compatibilizan con todos los protocolos actualmente existentes, su conector CPC de 16 polos integrados, permite el uso de todos los cables de diagnosis. Es compatible con AXONE NEMO y PC. Gracias a la tecnología Bluetooth el técnico podrá realizar una cómoda diagnosis sin cables de por medio, incluso desde el pantalán.
Extremadamente potente, permite al mecánico una gestión fácil de los archivos de mapa. Los estandares CAN soportados incluyen la posibilidad de gestión CAN single wire y un CAN controller más para la diagnosis sobre más redes.
Permite la grabación de la sesión de diagnosis en modalidad “pruebas dinámicas”, es decir con la embarcación en movimiento, para localizar averías específicas que no se podrían verificar en el amarre. La interfaz reconstruye una panorámica completa de la situación en la que la anomalía se ha verificado, proporcionando importantes elementos de análisis para identificar las causas de la avería.

NAVIGATOR TXB EVOLUTION

L’evoluzione della diagnosi, disegnato e sviluppato specificamente per l’ambiente Marino.

Le caratteristiche hardware lo rendono compatibile con tutti i protocolli attualmente esistenti, il suo connettore CPC 16 poli integrato consente l’utilizzo di tutti i cavi diagnostici. E’ compatibile con AXONE NEMO e PC. Grazie alla tecnología Bluetooth il tecnico potrá realizzare una diagnosi senza cavi in mezzo, anche dal molo.
Estremamente potente, permette al meccanico una gestione facile degli archivi della mappa. Gli standard CAN supportati offrono la possibilità di gestire: CAN single wire e un altro CAN controller per eseguire le diagnosi su più reti.
Permette la registrazione di una sessione di diagnosi in modalità “prova dinamica”, ovvero con l’imbarcazione in movimiento, per constatare avarie specifiche che non si possono verificare in officina. La sua interfaccia permette di ricostruire una panoramica completa della situazione in cui l’anomalia si è verificata, fornendo gli elementi per identificare le eventuali avarie.

APLICACIONES
APPLICATIONS
APPLICAZIONI

Consulte la lista actualizada de aplicaciones en:
See the updated list of applications in:
Vedi l'elenco aggiornato delle applicazioni in:
www.texaiberica.com/cobertura-diagnosis

MOTORES FUERABORDA
OUTBOARD ENGINES
MOTORI FUORIBORDO

	MODELOS MODELS MODELLI
EVINRUDE	(90 - 250 Ficht Ram) E-Tec 25 - 300 HP, DFi
HONDA Marine	BF 40-250 HP
JOHNSON	4 Stroke
MARINER	4 Stroke, OptiMax, Verado, DFI, EFI
MERCURY	4 Stroke, OptiMax, Verado, DFI, EFI
MERCURY Racing	OPTIMAX, DSi, VERADO 400R
PARSUN	40 EFi
SELVA Marine	4 S troke EFi
SUZUKI Marine	DF 40 -300 HP
TOHATSU	MFS, BFW, BFT
YAMAHA Marine	F, T, Z 30 - 350 HP

MOTORES INTRABORDA
INBOARD ENGINES
MOTORI ENTROBORDO

	MODELOS MODELS MODELLI
CATERPILLAR	3196, 3176, 3126B, 3508B, 3508C, C12, C12 Acert, C18 Acert Tier 2, C32 Acert IMO II, C32 Acert Tier 2, C32 Acert Tier 2 HP, 3512 B HD,C3512B, 3512C HD, 3512C, 3516B HD, 32 Acert Tier 2 H.P. Recreational, C32 Acert Tier 3, C7, C7 Acert, C9 Acert., 3516B, 3516C HD, 3516C, C15 Acert, C6.6 Acert
CRUSADER	5.0, 5.7, 6.0, 8.1 MPI & HO MPI
CUMMINS / MW	QSD2.0-115 / 130 / 150 / 170, QSD2.8-220, QSD4.2-270 / 320 / 350, QSB5.9 / 6.7, QSC8.3, QSK19, QSL9, QSM11 (Sistema Inyección Bosch / System injection Bosch / Sistema Iniezione Bosch) Comon Rail
FIAT	C13, C78, C87, GE CURSOR 250E, 350E, 400E, N40, N60, N67, S30
FNM	HPEP, HPE 80-300 HP
HYUNDAI SEASALL	D150P/S, D170J/P/S, S220P/S, S250J/P/S, U125J/P/S
ILMOR	5.7L, 6.0L, 6.2L, MV-8
INDMAR	5.7, 6.0, 8.1, Steyr 256 Diesel
KOHLER	
LOMBARDINI Marine	LDW 194 JMT, LDW 240 JMT
MAN	D2868, V8-1000, V8-1200
MERCRUISER	350, 377, 454, 496, 496MAG, 3.0L, 4.3L, 5.0L, 5.7L, 6.2L, 7.4L, 8.1L, 8.2L, TBI, MPI, Black Scorpion, Vazer, Mandos SmartCraft, D2.8D-Tronic
MERCRUISER Diesel	VM D-Tronic, VM (no D-Tronic), MD2.0-115/130/150/170, MD2.8-270/320/350,TDI3.0-230/260, TDI4.2
MERCURY Racing Inbord	SCI, EFI, QC4V, 500EFI, 520, 525EFI, 540, 565, 575, 600, 850, Scorpion 377
MTU	MDEC C2
PCM MARINE Engines	5.0L, 5.7L, 6.0L, 8.1L
PERKINS	1106C-E6OTA 6.0L
SEA-DOO	Speedster, Challenger, Utopia, Islandia, Wake, Wake Speedster, Sportster
SISU AGCO	44 CTIM-2V, 49/66/74/84 CTIM-4V
STEYR MOTORS	MO306H43WJ, MO54NA33, MO84K32, MO94K33, MO114K33, MO126M28, MO144M38, MO156K25, MO164M40, MO166M28, MO174V40, MO196K35, MO236K42, MO256H45, MO256H43, MO286H43 SE126E25, SE156E26, SE196E35, SE236E40, SE236S36 SE266, SE286, SE306J38
VM MOTORI	2.8L, 4.2L D-Tronic, MD704, MD706, MR504LB
VOLKSWAGEN Marine	SDI, TDI
VOLVO PENTA	KAD, EDC, EGC, EVC, GXI, OSI, GI, GSI, OSXI, IPS, TAMD
YANMAR	4BY2-150 / 180, 6BY2-220 / 260 (Sistema Inyección Bosch / System injection Bosch / Sistema Iniezione Bosch) 4BY3-150/180, 4JH, 6BY3-220/260, 6LY3, 8LV-320/350/370

MOTOS DE AGUA
PWC
MOTO D'ACQUA

	MODELOS MODELS MODELLI
HONDA Marine	Aquatrax
KAWASAKI Marine	STX, Ultra.
SEA-DOO	GTI, GTX, RXP, RXT,GTR, GTS, GTX-S, Spark, Wake Pro, Wake
YAMAHA Marine	Waverunner FX, FZR, FZS, GP, VX

SIN CABLES DE INTERFACE
WITHOUT INTERFACE CABLE
SENZA CAVI INTERFACE

Ref.		CABLE WIRE CAVI
REC3902417	OBD, FNM Marine, VOLKSWAGEN, HYUNDAI	AM08
REC3902659	Marine FPT	AM11
REC3904277	Marine CUMMINS, MERCURISER Diesel, VM (not D-Tronic), KOHLER	AM24A
REC3905159	Marine VOLVO EGC 05/05ϑ 5/07	AM26
REC3905286	Marine MTU-MDEC	AM28
REC3905397	Marine CATERPILLAR, PERKINS	AM29
REC3906219	Marine TOHATSU	AM30
REC3906891	Marine MAN	AM31
REC3905015	Personal Water Craft KAWASAKI cable kit	


REC3902417

REC3902659



REC3904277


Conector redondo
Round connector
Connettore rotondo
REC3905159


REC3905397



REC3905286



REC3906219



REC3906891



REC3905015

INTERFACE AM01

Ref. AM01
REC3902358



Ref.		CABLE WIRE CAVI
REC3902407	Marine HONDA / TOHATSU, PGM (FI)	AM02
REC3902247	Marine 2 pin MERCURY, MERCRUISER	AM04
REC3902250	Marine 4 vie MERCURY, MERCRUISER	AM05
REC3902413	Marine YAMAHA / SELVA	AM06
REC3902414	Marine 6 pin VOLVO PENTA	AM07
REC3902467	Marine VOLVO KAD - TAMD	AM09
REC3902864	Marine STEYR	AM12
REC3902865	Marine EVINRUDE	AM13
REC3902907	Marine VOLVO, MERCRUISER (gasolina / fuel / benzina), MEFI-4, 4B,3,2,1, CRUSADER	AM14
REC3902931	Marine YANMAR	AM15
REC3903560	Marine SUZUKI	AM22
REC3905265	Marine MERCRUISER / VM D-Tronic	AM27
REC3908405	PARSUNS	3151/AP54



REC3902247



REC3902407



REC3902413



REC3902250



REC3902414



REC3902467



REC3902864



REC3902865



REC3902907



REC3903560



REC3902931



REC3905265



REC3908405

INTERFACE AM01CAN

Ref. AM01CAN
REC3903008



Ref.		CABLE WIRE CAVI
REC3902960	Marine VOLVO, MERCRUISER (gasolina / fuel / benzina), MEFI-5 / EGC, ILMOR, CRUSADER, ILMOR, INDMAR, PCM (MEFI-5/EGC UBD-Msocket)	AM16
REC3903502	Marine VOLVO, EGC-EV	AM18
REC3904778	Marine MERCURY, MARINER, CUMMINS 2010+, MANDOS MCM, SMARTCRAFT	AM25
REC3907103	Marine STEYR with CAN Line protocol	AM32
REC3907642	YANMAR MARINE CAN CABLE	AM33



REC3902960 REC39003502 REC39004778



REC3907103



REC3907642

KIT DIAGNOSIS Y REPROGRAMACIÓN DE LLAVE
CABLE KIT FOR DIAGNOSIS AND KEY REPROGRAMMING
KIT PER LA DIAGNOSI E RIPROGRAMMAZIONE DE CHIAVE

Ref.		CABLE WIRE CAVI
REC3906015	BRP Group	3151/AP43



PUNTAS DE DERIVACIÓN
REFERRAL POINTS
PUNTA DI DERIVAZIONE

Ref.	CABLE WIRE CAVI
REC3904048	AM10



Puede utilizarse con interface AM01 o AM01CAN dependiendo de la marca.
It can be used with AM01 or AM01CAN interface depending on the brand.
Può essere utilizzato con l'interfaccia AM01 o AM01CAN in base alla marca.

FUSIBLES Y PORTAFUSIBLES
FUSES & FUSE BLOCKS
FUSIBLI E PORTAFUSIBILI

FUSIBLES ATC
MARINE FUSES ATC
FUSIBILE ATC

REF			(mm)	
GS11501	3 A		19 x 19	5
GS11502	5 A			
GS11503	10 A			
GS11504	15 A			
GS11505	20 A			
GS11506	30 A			

GOLDENSHIP



REF			(mm)	
BS5291	3 A		19 x 19	2
BS5292	5 A			
BS5293	7,5 A			
BS5294	10 A			
BS5295	15 A			
BS5296	20 A			
BS5297	25 A			
BS5298	30 A			
BS5299	40 A			



Con LED indicador de fundido.
With illuminated LED when blown.
Con indicatore LED di guasto.

BLUE SEA SYSTEMS



REF		(mm)	
AM603905	5 A	11 x 11	2
AM603910	10 A		
AM603915	15 A		
AM603920	20 A		
AM603930	30 A		



ANCOR MARINE GRADE™ PRODUCTS

FUSIBLES MAXI
MAXI FUSES
FUSIBILE MAXI

REF		
BS5138	30 A	1
BS5139	40 A	
BS5140	50 A	
BS5141	60 A	
BS5142	70 A	
BS5143	80 A	



BLUE SEA SYSTEMS

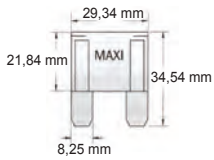

Contactos estañados para resistir a la corrosión.
Tin plated connector blades for corrosion resistance.
Contatti in stagno per resistere alla corrosione.

DEPÓSITOS COMBUSTIBLE
FUEL TANKS
SERBATOIO CARBURANTE

Depósitos para combustible. Fabricados en plástico ELTEX. Conector para manguera de 8 mm. Cumple las normas ISO-13591 ABYC H-25 International Standards Certified.
Fuel tanks mades of ELTEX. With pick up fuel 8 mm. Meets ISO-13591 ABYC H-25 International Standards Certified.
Serbatoio per carburante. Fabbricato in plastica ELTEX. Attacco tubo da 8 mm. Conforme alla norma ISO-13591 ABYC H-25 International Standards Certified.

GOLDENSHIP

REF	(l)	(mm)	(cm)
GS31047	42	8	22 x 35 x 65
GS31048	52	8	22 x 35 x 80
GS31049	75	8	22 x 35 x 105
GS31043	45	8	30 x 35 x 50
GS31044	60	8	30 x 35 x 65
GS31045	75	8	30 x 35 x 80
GS31046	100	8	30 x 35 x 105



ACCESORIOS PARA GS31043 A GS31049
ACCESSORIES FOR GS34043 TO GS31049
ACCESSORI PER GS31043 e GS31049

REF			
GS31056	Racor alimentación	Outlet pipe	Raccordo
GS31057	Racor Diesel	Breather pipe for Diesel	Raccordo Diesel
GS31058	Toma completa	Complet outlet	Tubo completo
GS31055	Tapón depósito	Complete plug	Tappo serbatoio



GS31056
GS31057



GS31058



GS31055

REF	(l)		(mm)	GASOLINA FUEL BENZINA	DIESEL
SFGT0501	5		260 x 130 x 275	4	
SFGT1001	10		290 x 160 x 346	4	
SFGT2001	20		330 x 190 x 476	4	
SFDT0501	5		260 x 130 x 275		4
SFDT1001	10		290 x 160 x 346		4
SFDT2001	20		330 x 190 x476		4

SEAFLO



ISO-13591 ABYC H-25 International Standards Certified

REF	(l)	(mm)	(cm)
GS31050	12	8	26 x 46 x 22
GS31051	22	8	32 x 54 x 24
GS31053	30	8	36 x 50 x 24
GS31052	22	8	32 x 50 x 21



GS31052

Con indicador de nivel.
With built-in level indicator.
Con indicatore di livello.

GOLDENSHIP



GS31050
GS31051
GS31053

CONECTORES GASOLINA
FUEL FITTINGS
ATTACCHI BENZINA

TOMA TANQUE COMBUSTIBLE
FUEL TANKS CONNECTOR
ATTACCO PER SERBATOIO

REF	R.O. OEM R.O.	MOTORES ENGINES MOTORI		
GS31033	116977-ZV5-A00	HONDA NEW	1/4" NPT	1
GS31032	116977-ZV5-900	HONDA OLD	1/4" NPT	1
GS31019	99998-00MA2	TOHATSU/NISSAN	1/4" NPT	1
GS31017		TOHATSU/NISSAN 5-90 HP (2 T/Stroke/T)	1/4" NPT	1
GS31018	3B2-702601M	TOHATSU/NISSAN 5-90 HP (2 T/Stroke/T)		1
GS31077	F213238T 2	CHRYSLER FORCE (-1992) 5HP (1993-97) 9.9, 15, 25 HP	1/4" NPT	1
GS31070	99105-00193	SUZUKI	1/4" NPT	1
GS31037	99105-00192	SUZUKI 2 - 60 HP		1

GOLDENSHIP



GS31070
GS31019



GS31017



GS31018



GS31033
GS31032



GS31077
GS31037

REF	R.O. OEM R.O.	MOTORES ENGINES MOTORI	
REC65720-98520	65720-98520	SUZUKI DF9.9 - DF15 (4T/Stroke/T) DT2 - DT65 (2T/Stroke/T)	1



REF	R.O. OEM R.O.	MOTORES ENGINES MOTORI		
GS31086		CHRYSLER FORCE (-1992) 5HP (1993-97) 9.9, 15, 25 HP	5/16"	1
GS31087	F197787T 3		3/8"	1
GS31031	17660-ZV5-A00 17660ZW9-003	HONDA	3/8"	1
GS31035	65750-98505	SUZUKI (-60 HP) 2 tiempos /stroke/tempi	5/16"	1
GS31036			3/8"	1
GS31016	3B2-702810M	TOHATSU/NISSAN (5-90HP) 2 tiempos /stroke/tempi	3/8"	1
GS31071	65750-95500	2 tiempos /stroke/tempi	5/16"	1
GS31072			3/8"	1
GS31030	17660-ZV5-902	HONDA	3/8"	1
GS31088	3B2-702501M	TOHATSU/NISSAN (5-90HP) 2 tiempos /stroke/tempi	3/8"	1

GOLDENSHIP



GS31086
GS31087
GS31031
GS31035
GS31036
GS31016



GS31071
GS31072
GS31030



GS31088

REF	R.O. OEM R.O.	MOTORES ENGINES MOTORI		
GS31025		MERCURY/MARINER	1/4" NPT	1
GS31073		YAMAHA		1
GS31083	772681	JOHNSON/EVINRUDE		1
GS31081		MERCURY/MARINER		1

GOLDENSHIP



GS31025

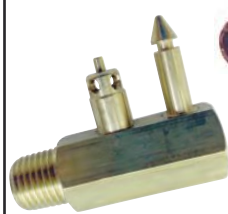

GS31073



GS31083



GS31081

REF	R.O. OEM R.O.	MOTORES ENGINES MOTORI		
GS31022		MERCURY/MARINER STAN-DAR		1
GS31023		MERCURY/MARINER NEW		1
GS31020		YAMAHA	1/4" NPT	1
GS31021		JOHSON/EVINRUDE	1/4" NPT	1

GOLDENSHIP



GS31022 GS31023 GS31020 GS31021

REF	R.O. OEM R.O.	MOTORES ENGINES MOTORI		
GS31078	22831T03	MERCURY/MARINER	3/8"	1
GS31079	30185T3	MERCURY/MARINER	5/16"	1
GS31080			3/8"	1

GOLDENSHIP



REF	R.O. OEM R.O.	MOTORES ENGINES MOTORI		
GS31038	65720-94411	SUZUKI OLD		1
GS31039		2 tiempos /stroke/tempi	1/4"	1

GOLDENSHIP



CONECTOR COMBUSTIBLE
FUEL CONNECTOR
ATTACCO COMBUSTIBLE

REF	R.O. OEM R.O.	MOTORES ENGINES MOTORI		
GS31026	22-142131		1/4"	1
GS31027	22-13563T-3	MERCURY/MARINER	5/16"	1
GS31028	22-13563T-3		3/8"	1
GS31082	22-13563T 7	MERCURY/MARINER 4HP - V6 (1998+)	3/8"	1

GOLDENSHIP



REF	R.O. OEM R.O.	MOTORES ENGINES MOTORI		
GS31034	17650-921-003ZB	HONDA	3/8"	1

GOLDENSHIP



REF	R.O. OEM R.O.	MOTORES ENGINES MOTORI		
GS31015	394-702500M	TOHATSU/NISSAN 4 tiempos /stroke/tempi	3/8"	1

GOLDENSHIP



REF	R.O. OEM R.O.	MOTORES ENGINES MOTORI		
GS31074	6Y1-24305-04	YAMAHA	1/4"	1
REC6G1-24305-03	6G1-24305-00		5/16"	1
GS31076	6E5-24305-05		3/8"	1
GS31075	6G1-24305-05		6 mm	1

GOLDENSHIP



REF	R.O. OEM R.O.	MOTORES ENGINES MOTORI		
GS31084	174508	JOHNSON/EVINRUDE	5/16"	1
GS31085	176445		3/8"	1

GOLDENSHIP



REF	R.O. OEM R.O.	MOTORES ENGINES MOTORI		
GS31089	65720-986BO 65720-94410	SUZUKI 25 - 140 HP 4 tiempos /stroke/tempi	3/8"	1

GOLDENSHIP



REF	R.O. OEM R.O.	MOTORES ENGINES MOTORI	
REC65750-94404	65750-94404	SUZUKI DT4 - DT140 HP	1

NEW

Compatible con el conector GS31039
Compatible with the GS31039 connector
Compatibile con il connettore GS31039



REF	R.O. OEM R.O.	MOTORES ENGINES MOTORI	
REC65720-986L0	65720-986L0	SUZUKI DF25 - DF140 HP	1

NEW

Compatible con el conector GS31089
Compatible with the GS31089 connector
Compatibile con il connettore GS31089

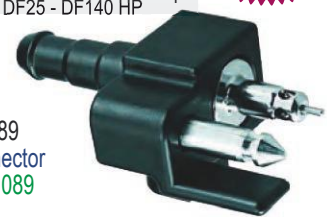

REF	R.O. OEM R.O.	MOTORES ENGINES MOTORI		
REC6G1-24304-02	6G1-24304-02	YAMAHA	6 mm	1



NEW

CONECTOR DOBLE
DOUBLE CONNECTOR
CONNETTORE DOPPIO

REF	MOTORES ENGINES MOTORI		
GS31091	OMC	8 mm	1
GS31092	YAMAHA	8 mm	1
GS31093	MERCURY/MARINER	8 mm	1

GOLDENSHIP

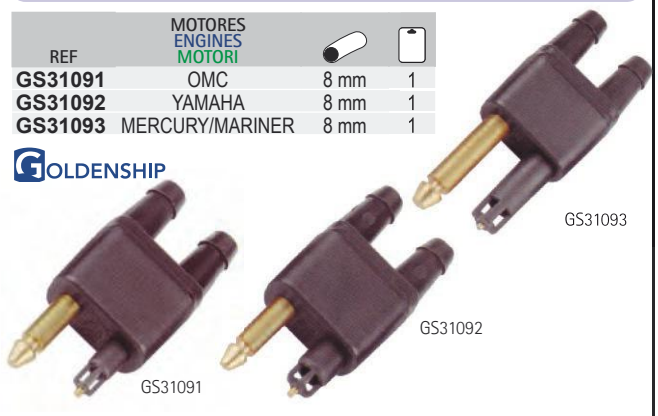

GS31093

GS31092

GS31091

CONECTORES DE LATÓN
BRASS CONNECTOR
ATTACCO IN OTTONE

REF		
GS31068	1/4" NPT	1
GS31069	1/4" NPT	1

GOLDENSHIP MADE IN THE USA



GS31068

GS31069

PASAMAMPAROS
THRU HULL
PASSA SCAFO

REF		
GS31064	3/8"	1

GOLDENSHIP MADE IN THE USA



Para atravesar mamparos de hasta 12mm. Fabricado en latón.
For bulkhead up to 12 mm. Made in machined brass.
Per attraversare paratie fino a 12mm. Fabbricato in ottone.

BOMBA COMBUSTIBLE
PRIMER BULB
POMPA BENZINA

Fabricada con elastómeros termoplásticos inyectados, resistentes al alcohol y rayos UV.

Premium quality bulb resistence to alcohol as well as UV and ozone.

Fabbricata con elastomero termoplastico, resistente ai solventi e raggi UV.

REF	R.O. OEM R.O.	MOTORES ENGINES MOTORI		
SIE18-8004	98396A38 174511	MERCURY/MARINER JOHNSON/EVINRUDE	5/16"	1
SIE18-8005	98396A38 174511	MERCURY/MARINER JOHNSON/EVINRUDE	3/8"	1



REF		
GS31187	1/4"	1
GS31090	5/16"	1
GS31095	3/8"	1
CEF500621	8 mm	1

GOLDENSHIP



GS31187 - GS31090 - GS31095

cef



CEF500621

LÍNEA DE COMBUSTIBLE
FUEL LINE ASSEMBLY
TUBO CARBURANTE

REF		
GS31183	6 mm x 2 m	1

NEW

GOLDENSHIP



REF	R.O. OEM R.O.		
PAF15-09000000	6G1-24306-55	6 mm x 3m	1

NEW



REF		
GS31096	5/16"	1
GS31097	3/8"	1
GS31099	8 mm	1
SIE18-8013	5/16"	1
SIE18-8015	3/8"	1
CEF500600	8 mm	1



GOLDENSHIP
GS31096



GOLDENSHIP
GS31097

GOLDENSHIP
GS31099





MADE IN THE USA
SIE18-8013
SIE18-8015

cef
CEF500600



VÁVULAS
VALVE
VALVOLA

VÁVULA DE COMBUSTIBLE
FUEL VALVE
VALVOLA CARBURANTE

REF			
GS31006	1/4" NPT	1/4" FNPT	1



GOLDENSHIP

REF			
GS31012	1/4"	10 mm	1

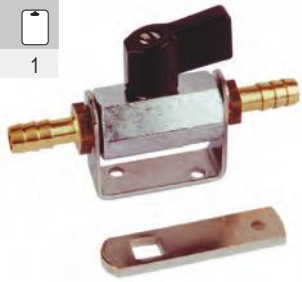

GOLDENSHIP

Válvula manual para combustible. Fabricada en latón cromado con racors. Puede montarse en línea o desmontando el soporte, incorporarla directamente al depósito.
Manual and remote fuel valve. Made in chrome plated brass. Can be mounted in line with hose or directly on gasoline tanks.
Valvola manuale per carburante. Fabbricata in ottone cromato con raccordo. Si puo' montare in línea o smontando il supporto, incorporarla direttamente al serbatoio.

REF			
GS31010	1/4"	10 mm	1
GS31011	3/8"	10-13 mm	1



GOLDENSHIP

Válvula manual a 3 vías, para combustible. Fabricada en latón pulido. Montaje mediante soporte con 2 agujeros.Para conectar 2 depósitos a un solo motor.
Three ways fuel valve. Made in brass, with 2 holes flange. To connect 2 tanks to one single feeding pipe.
Valvola manuale a 3 uscite, per carburante. Fabbricata in ottone. Fissare mediante supporto con 2 fori. Per collegare 2 serbatoi a un solo motore.

ELECTROVÁLVULA DE COMBUSTIBLE
FUEL ELECTRO-VALVE
ELETTROVALVOLA CARBURANTE

REF			
GS31013	1/4"	8-10 mm	1

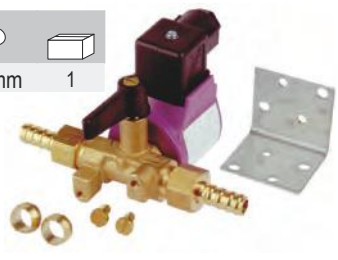

GOLDENSHIP

Electroválvula para carburante con capacidad hasta 100 l/h. Incluye conexiones para mangueras flexibles y para tubo de cobre. Accionamiento a 12V y manual.
Cumple las normas: CE 94/25 (EN28846) y R.I.Na.DIP 61697.
Fuel cut off electrovalve 12V with manual cock. Includes racors for felxible hose and cooper tube.
Capacity: 100 lt/h. Meets: CE 94/25 (EN28846) & R.I.Na.DIP 61697
Elettrovalvola per carburante con Capacità fino a 100 litri/ora. Include raccordi per tubo flessibile e per tubi di rame. Avviamento a 12V e manuale. Conforme alla norma: CE 94/25 (EN28846) e R.I.Na.DIP 61697

VÁLVULA ANTI-RETORNO
NON-RETURN VALVE
VALVOLA ANTI-RITORNO

REF		
GS31003	8 mm	1
GS31004	10 mm	1
GS31005	12 mm	1



GOLDENSHIP

Válvula anti-retorno para líneas de combustible y ventilación.
In-Line non-return valve for fuel pipes.
Valvola anti-ritorno per linee di combustibile e ventilazione.

RACORS
RACORS
RACCORDO

REF			
GS30111	1/4"	10 mm	1
GS30112	3/8"	12 mm	1



GOLDENSHIP

Fabricado en latón. Para válvulas de combustible GS31010 y GS31011
Made in machined brass. For fuel valves GS31010 & GS31011.
Fabbricato in ottone. Per valvola carburante GS31010 e GS31011.

FILTROS GASOLINA
FUEL FILTERS
FILTRO BENZINA

REF		
GS30435	6, 8, 10 mm	1

GOLDENSHIP

De metal y cristal.
Montaje en línea.
In-line. Clear body permits visual inspection.
Di metallo e cristallo.
Montare in línea.



REF			
GS31001	50 l/h	6-8 mm	1
GS31002	150 l/h	8-10 mm	1



GS31001

GOLDENSHIP

Filtro transparente para gasolina o gasoil.
Transparent plastic in line filter for petrol and diesel.
Filtro trasparente per benzina o gasolio.



GS31002

REF		
GS31185	6-8 mm	1
GS31186	6-8 mm	1



GS31185

GOLDENSHIP



GS31186

Cubeta extraíble.
Removable bowl.
Vasca estraibile.

FILTRO DECANTADOR GASOLINA
COMPLETE FUEL FILTER
FILTRO DECANTATORE BENZINA

FILTRO COMPLETO COMPLET FILTER FILTRO COMPLETO	CARTUCHO DE RECAMBIO REPLACEMENT ELEMENT CARTUCCIA DI RICAMBIO	MOTORES ENGINES MOTORI
RAC23299-10	RAC23289-10	4T 130HP



Filtro de combustible con braket.
Complete fuel filter with braket.
Filtro combustibile con supporto.

FILTRO COMPLETO COMPLET FILTER FILTRO COMPLETO	CARTUCHO DE RECAMBIO REPLACEMENT ELEMENT CARTUCCIA DI RICAMBIO		MOTORES ENGINES MOTORI
REC90794-46866	REC90794-46868	8 mm	117 l/h 175 hp
PAF40-0701000EI		6 mm	70 hp



RECmar

Filtro de decantación completo con vaso transparente. Para motores fueraborda.
Complete fuel filter with transparent bowl. For outboards engines
Filtro di decantazione completo con vaschetta trasparente. Per motori fuoribordo.

LLAVE PARA FILTRO
FILTER WRENCH
CHIAVE PER FILTRO

REF
RECYS-225-15



FILTRO COMPLETO COMPLET FILTER FILTRO COMPLETO	FUERABORDA OUTBOARD FUORIBORDO		CAPACIDAD MÁX. MAX. CAPACITY CAPACITÀ MASS.
RAC490R-RAC-01	150 HP	3/8" NPTF	340 l/h

RACOR



Filtro de decantación **con purgador.** Completo con vaso transparente.
Complete fuel filter **with primming pump** and transparent bowl.
Filtro di decantazione con **pompa adescamento.** Completo con vaschetta trasparente.

REF	R.O. OEM R.O.	MOTORES ENGINES MOTORI	
RACS3227	YMM-2E227-00	YAMAHA	10 micron
LENS3227	YMM-2E227-00	SUZUKI	



FILTRO COMPLETO COMPLET FILTER FILTRO COMPLETO	CARTUCHO DE RECAMBIO REPLACEMENT ELEMENT CARTUCCIA DI RICAMBIO	BRACKET	CAPACIDAD MÁX. MAX. CAPACITY CAPACITÀ MASS.
REOBFILTER	RECOBELEMENT LENS3213	Plástico Plastic Plastica	150 l/h
RECOBFILALU		Aluminio Alluminium Alluminio	



RECmar



RECOBELEMENT



LENS3213

Filtro de decantación completo con vaso transparente. Para motores fueraborda.
Complete fuel filter with transparent bowl. For outboards engines.
Filtro di decantazione completo con vaschetta trasparente. Per motori fuoribordo.

FILTRO COMPLETO COMPLET FILTER FILTRO COMPLETO	CARTUCHO DE RECAMBIO REPLACEMENT ELEMENT CARTUCCIA DI RICAMBIO	BRACKET
RAC320R-RAC-03	RACS3213 LENS3213	Plástico Plastic Plastica
RAC320R-RAC-01		Aluminio Alluminium Alluminio

RACOR



Incluye soporte
Includes bracket
Con supporto



LENS3213



RACS3213

LLAVE PARA CAZOLETA
BOWL WRENCH
CHIAVE PER VASCHETTA

REF
RACRK226258



ELEMENTOS DE RECAMBIO
ELEMENT
ELEMENTI DI RICAMBIO

REF	R.O. OEM R.O.	Para filtros For filters Per filtro
RACS3240	YMM-2E227-00	RAC120R-RAC-01
LENS3240		
RACS3227		Yamaha-Suzuki
LENS3227		
RACS3213		RAC320R-RAC-01 RAC320R-RAC-01 INOX RAC320R-RAC-03
LENS3213		
RACS3214		Reemplaza Johnson & Evinrude Replaces Johnson & Evinrude Sostituisce Johnson & Evinrude
RACS3228UL		RAC320R-RAC-02, con/with bracket RACOR



LENS3240
LENS3227
LENS3214



RACS3240
RACS3227
RACS3214

RACS3228UL





RACOR

	RAC120R-RAC-01	RAC320R-RAC-01	RAC320R-INOX-01	RAC320R-RAC-02
FLUJO MÁXIMO MAX. FLOW FLUSSO MASSIMO	114 l/h 30 gph	340 l/h 60 gph	340 l/h 60 gph	340 l/h 60 gph
ELEMENTO ELEMENT ELEMENTO	**RAC3240**	**RAC3213**	**RAC3213**	**RAC3220UL**
CAZOLETA TRANSPARENTE (sólo se recomienda para fueraborda.) CLEAR BOWL (Just for outboards) VASCHETTA TRASPARENTE (Solo nei fuoribordo.)	✔	✔	✔	✘
ROSCAS CENTRALES CENTRAL THREADS FILETTO CENTRALE	M18 x 1.5	1 1/4"	1 1/4"	1 1/4"
TAMAÑO ROSCA CABEZA HEAD PORT SIZE DIMENSIONE VITE TESTA	1/4-18 NPTF	1/4-18 NPTF	1/4-18 NPTF	1/4-18 NPTF
ALTURA X ANCHO X PROF. HEIGHT X WIDTH X DEPTH ALTEZZA X LARGH X PROF.	166 x 81 x 81 mm	238 x 102 x 102 mm	238 x 102 x 102 mm	238 x 102 x 102 mm
PESO WEIGHT PESO	0,5 kg	0,9 kg	0,9 kg	0,9 kg
CAIDA DE PRESIÓN PRESSURE DROP CADUTA DI PRESSIONE	0.15 PSI 0.01 bar	0.61 PSI 0.04 bar	0.61 PSI 0.04 bar	0.61 PSI 0.04 bar
PRESIÓN MÁXIMA MAX. PRESSURE PRESSIONE MASSIMA	7 PSI 0.05 bar	7 PSI 0.05 bar	7 PSI 0.05 bar	7 PSI 0.05 bar
DESMONTAJE CARTUCHO-CAZOLETA ELEMENT REMOVAL UNDERBOWL RIMOZIONE DELLA CARTUCCIA	25,4 mm 1"	25,4 mm 1"	25,4 mm 1"	25,4 mm 1"
TEMPERATURA DE TRABAJO OPERATING TEMPERATURE TEMPERATURA DI LAVORO	-40°C +124°C			

RACORS / RACORS / RACCORDI

REF		CODO 90° ELBOW 90° GOMITO 90°	RECTO STRAIGHT DRITTO	
GS31065		3/8"		1
GS31066	1/4" NPT		5/16"	2
GS31067			3/8"	2



OREJERAS
MOTOR FLUSHER
CUFFIE LAVAGGIO

Tomas de agua para refrigeración de motores fueraborda y colas intra-fueraborda.
For use on most outboards and inboard/outboards engines with side water inlets.
Cuffie lavaggio per motori entro-fuoribordo e fuoribordo.

OREJERAS REDONDAS
MOTOR FLUSHER ROUND
CUFFIE LAVAGGIO ROTONDE

REF	
GS30350	1



USO PROFESIONAL
PROFESSIONAL
USO PROFESSIONALE

REF	
GS30351	1

OREJERAS CUADRADAS
MOTOR FLUSHER SQUARE
CUFFIE LAVAGGIO QUADRATE

GOLDENSHIP

REF	
GS30352	1



USO PROFESIONAL
PROFESSIONAL
USO PROFESSIONALE

REF	
GS30353	1

PINTURAS
SPRAY PAINTS
PITTURE

Sprays de pintura con los colores originales para retoque de los motores fueraborda, interiores, intra-fueraborda y colas fueraborda más usuales. Capacidad: 400ml.
Spray paints with the original colors for maintenance and painting inboards and outboard marine engine as well as stern-drives units. Bottle: 400ml.
Vernice spray con i colori originali per ritocchi dei motori fuoribordo, entrobordo, entro-fuoribordo e i piedi. Capacità: 400ml.

GOLDENSHIP



Ref.	MOTOR ENGINE MOTORE	
GS90037	Evinrude	XP
PS111139	Honda	Gris Beige / Grey / Grigio-Beige (1991)
GS90038	Honda	Gris metalizado / Grey Metal / Grigio metalliz.
GS90023	Honda	Plata met. / Silver Metal / Argento metalliz.
GS90030	Johnson	(1972-90) - (1993+)
GS90026	Johnson	(1981-83)
GS90039	Johnson	Plata metal. / Silver Metal / Argento metalliz.
GS90040	Mariner	
GS90002	Mercury	
GS90049	Parsun	
GS90032	Suzuki	Plateado / Silver / Argento (1983-89)
GS90025	Suzuki	Gris Metal / Grey Metal / Grigio Metalliz. (1989)
GS90042	Suzuki	Negro metal. / Black Metal / Nero Metalliz.
GS90024	Tohatsu	Gris Metal / Grey Metal / Grigio Metalliz.(1991)
GS90027	Tohatsu	Cobalto / Cobalt / Cobalto (1988-90)
GS90043	Tohatsu	
PS114694	Yamaha	Azul Metal / Blue Metal / Blu Metalliz. (1974)
GS90021	Yamaha	(1984+)
GS90020	Yamaha	Azul Origen / Blue Origin / Blue Originale
GS90022	Yamaha	Gris Metal / Grey Metal / Grigio Metalliz. (1994)
PS110485	Yamaha	Gris Capot / Grey Capot / Grigio Capot (1994)
GS90006	Caterpillar	
PS111028	Cummins	
PS111047	Cummins	Blanco hueso / White bone / Bianco osso
PS111035	Detroit Diesel	Plateado / Silver / Argento
PS111091	IVECO / AIFO	
GS90002	Mercruiser	
PS114704	NanniDiesel	Azul Metal / Blue Metal / Blu Metalliz.
PS114709	OMC	Cobra Cola / Cobra Sterndrive / Piede Cobra
GS90041	Onan	Marfil / Ivory / Avorio
PS114699	Perkins	Verde Metal / Green Metal / Verde Metallizato
PS114700	Perkins	(1983+)
PS114701	Perkins	(1987)
GS90031	Solé Diesel	
PS111044	Volvo	(1995)
GS90034	Volvo	Gris / Grey Aquamatic / Grigio
GS90005	Volvo	(1972+)
GS90007	Volvo	Verde Agua / Green Water / Verde acqua (1972+)
GS90029	Volvo	(1989)
GS90003	Volvo	Gris Metal / Grey Metal / Grigio Metalliz. SX/DPX
GS90004	Yanmar	Gris Metal / Grey Metal / Grigio Metalliz. (1987+)

BARNIZ TRANSPARENTE
CLEAR VARNISH
VERNICE TRASPARENTE

Ref.	
GS90019	400 ml

GOLDENSHIP

IMPRIMACIÓN PARA MOTORES
PRIMER FOR ENGINES
PRIMER PER MOTORE

Ref.	
GS90001	400 ml
GS90012	400 ml



Sprays de imprimación base, para la posterior aplicación de las pinturas.
Primer in spray as base for engine paints.
Spray primer base, per la successiva verniciatura.

GOLDENSHIP

IMPRIMACIÓN PARA COLAS
PRIMER FOR STERNDRIVES
PRIMER PER PIEDI

Ref.	
SED4610100	250 cc
SED4610101	500 cc
SED4610102	2.500 cc



Gran adhesion sobre acero inox, bronce, aluminio, etc. Aplicación a brocha o rodillo. Para utilizar previo al Velox. Utiliza el diluyente Nº4.
Metal primer with excellent adhesion on al metals, stainless steel, bronze, aluminum, etc. To be used before Velox. Uses thinner Nº4.
Primer per metalli. È dotato di grande adesione su acciao inox, bronzo e alluminio. Diluente Nº 4, applicazione a pennello o a rullo.

MARLIN

ADHESIVOS
ADHESIVES
ADESIVI

SILICONA JUNTAS
LIQUID GASKET
SILICONE PER GUARNIZIONI

Ref.	
STA82910	83 ml



Star brite

Se utiliza para hacer las juntas de colectores de admisión y cárter. Resiste temperaturas hasta 310ºC.
Makes gaskets quickly, easily. For use up to +600ºF
Si utilizza per l'installazione delle guarnizioni nei collettori e nella coppe dell'olio. Resistente alle alte temperature fino a 310ºC.

SELLANTE TORNILLERIA PERMANENTE
THREADLOCKER PERMANENT
SILICONE PER BULLONERIA

Ref.	R.O. OEM	
PER27140	OMC 500423 MCM 92-809820	50 ml



Muy fuerte.Color rojo.
High strength. Red color.
Molto resistente. Colore rosso.

MANTENIMIENTO MOTORES
ENGINE MAINTENANCE
MANUTENZIONE MOTORI

PROTECTOR DIELÉCTRICO
DIELECTRIC PROTECTOR
PROTETTORE DIELETTRICO

Ref.	
GS90092	400 ml



Protector dieléctrico antihumedad para uso marino. Protege de la humedad y oxidación todos las partes eléctricas y mecánicas de los motores marinos. Ideal para invernaje de motores y mantenimiento de temporada.
Prevents humidity and corrosion of all electric and mechanical parts in marine engines. Specially indicate for winter storages and maintenance in the season.
Protettore dielettrico antiumidità per uso marino. Protegge dall'umidità e dall'ossidazione tutte le parti elettriche e meccaniche dei motori marini. Ideale per invernaggio dei motori e manutenzione di lunga durata.

GOLDENSHIP

PROTECTOR DE MOTOR
ENGINE PROTECTOR
PROTETTORE MOTORE

Ref.	
GS90090	500 ml



Producto a base de aceites y grasas que protege del óxido y la corrosión las superficies exteriores y partes eléctricas de los motores durante el invernaje. Evita la formación de agarrotamientos debido a la presencia de salitre. Facilita el arranque eliminando los residuos de agua y humedad. Se elimina facilmente.
Oil & grease made, protects from rust & corrosion external engine surface during winter storage. Removes salt deposit and loosens rusted parts. Easy to remove.
Prodotto a base di olio e grasso che protegge dall'ossidazione e dalla corrosione le superfici esterne e le parti elettriche dei motori durante l'invernaggio. Evita la formazione dell'ossidazione dovuta alla presenza del salmastro. Facilita l'accensione eliminando i residui di acqua e umidità. Si elimina facilmente.

GOLDENSHIP

DESCALCIFICADOR DE MOTOR
DESCALING ENGINE FLUSH
DECALCIFICANTE MOTORE

Ref.	
STA92600	3,8 L

Star brite



Limpiador para eliminar las incrustaciones, algas, y suciedad en los motores marinos. No daña las juntas ni impulsores de goma.
Removes scale, zebra mussels, general marine growth and vegetation rom all marine engines.
Pulitore per eliminare le incrostazioni, alghe, e sporcizia nei motori marini. Non danneggia guarnizioni e giranti in gomma.

ESTABILIZADOR DE GASOLINA
FUEL STABILIZER
STABILIZZATORE BENZINA

Ref.		PARA TRATAR TREAT UP PER TRATTAMENTO
GE22207	475 ml	150 l.



GOLD EAGLE

Para todos los motores de gasolina. Elimina el agua, limpia los carburadores e inyectores. Contiene antioxidantes para prevenir el óxido y la corrosión. No requiere vaciar el depósito para el invernaje y mantiene el combustible fresco para un rápido y fácil arranque.
For all gasoline engines. Keeps fuel fresh and allows for easier starts after periods of storage. Removes water, cleans carburetors and fuel injectors. Contains antioxidant to prevent rust and corrosion.
Per tutti i motori a benzina. Elimina l'acqua, pulisce i carburatori e iniettori. Contiene antiossidanti per prevenire l'ossidazione e la corrosione. Non è necessario svuotare il serbatoio per l'invernaggio, mantiene il carburante fresco per una rapida e facile partenza.

ESTABILIZADOR DE DIESEL
DIESEL STABILIZER
STABILIZZATORE DIESEL

Ref.		PARA TRATAR TREAT UP PER TRATTAMENTO
GE22254	946 ml	1.200 l.



GOLD EAGLE

Para todos los motores diesel. Ayuda a eliminar el agua que las bacterias, hongos y algas necesitan para crecer. Previene la formación de lodos y sedimentos. Limpia y lubrifica. Protege contra la corrosión. Reduce la oxidación del gasoil por cambios bruscos de temperatura. Mantiene el gasoil fresco para un rápido y fácil arranque.
For all diesel engines. Keeps diesel fresh and allows for easier starts after periods of storage. Prevent sludge and sediment formation. Clean and lubricate. Protect against rust and corrosion. Reduces oxidation of diesel fuel caused by thermal breakdown.
Per tutti i motori diesel. Favorisce l'eliminazione delle particelle d'acqua che tendono a crearsi nei serbatoi, e pertanto riduce in maniera decisiva batteri funghi ed alghe. Previene la formazione di sedimenti. Pulisce e lubrifica. Protegge contro la corrosione. Mantiene stabili i valori del gasolio a distanza di tempo.

ADITIVO GASOLINA
GASOLINE ADDITIVE
ADDITIVO BENZINA

Ref.		PARA TRATAR TREAT UP PER TRATTAMENTO
STA93008	237 ml	475 l.
STA93016	473 ml	950 l.



Star brite STAR TRON

Elimina y previene los problemas del ethanol. Reduce todas las emisiones contaminantes. Estabiliza la química del combustible durante 1 año. Reduce el mantenimiento del sistema de combustible. Elimina la producción de carbonilla. Reduce el consumo de combustible.
Eliminates and prevents ethanol fuel problems. Reduces all emisions. Prevents fuel oxidation and stabilizes fuel chemistry for at least 1 year. Lower fuel system maintenance. Eliminates carbon build-up. Increases fuel economy.
Elimina e previene i problemi dell'etanolo. Riduce tutte le emissioni contaminanti. Stabilizza la chimica del combustibile per 1 anno. Elimina la produzione di residui carboniosi. Riduce il consumo del combustibile.

ADITIVO DIESEL
DIESEL ADDITIVE
ADDITIVO DIESEL

Ref.		PARA TRATAR TREAT UP PER TRATTAMENTO
STA93116	473 ml	1.900 l.

Reduce todas las emisiones contaminantes. Estabiliza la quimica del combustible durante 2 años. Reduce el mantenimiento del sistema de combustible. Elimina la producción de carbonilla. Reduce el consumo de combustible. Cumple las normas de reducción de sulfuro en motores diesel.
Reduces all emissions. Stabilizes fuel chemistry for at least 2 years. Lower fuel system maintenance. Eliminates carbon build-up. Increases fuel economy. Meets low sujfur requirements for diesel engines.
Riduce le emissioni dei gas. Stabilizza la chimica del combustibile per due anni. Elimina la formazione di fuliggine e riduce i consumi. Soddisfa le norme di riduzione del solfato nei motori diesel .



Star brite STAR TRON

ACEITE DE INVERNAJE
FOGGING OIL
OLIO INVERNAGGIO

Ref.	
STA84800	3,8 l.
GE22001	340 g

Para inyectar en los carburadores de motores a 2 y 4 tiempos. Protege las paredes de los cilindros, aros de pistones y otras superficies de la cámara de combustión durante los periodos de invernaje, facilitando el arranque posterior del motor.
Prevents corrosion when storing inboard or outboard engines for a extended period of time. Special formula makes starting engine after storage quick and easy.
Da inserire nei carburatori dei motori da 2 e 4 tempi. Protegge le pareti dei cilindri, le fasce dei pistoni e altre superfici della camera di combustione durante il periodo di invernaggio, facilitando la partenza del motore dopo questo periodo.



STA84800

Star brite



GE22001

RECmar®

LIMPIADORES
CLEANERS
PULITORE

LIMPIADOR CARBURADOR Y STARTER
CARBURATOR & CHOKE CLEANER
PULITORE CARBURATORE

Ref.	
GEGC15	354 g

GOLD EAGLE

Aerosol para motores de 2 y 4 tiempos. Asegura arranques fáciles y ralentí suave. Despega los aros de los pistones. Restablece la potencia del motor.
Spray for all 2 and 4 cycle engines. Dissolves gum, varnish dirt and carbon deposits. Restore power & performance. Reduce fuel consumption.
Aerosol per motori di 2 e 4 tempi. Assicura partenze più facili e un minimo stabile. Lubrifica le fasce dei pistoni. Ristabilizza la potenza del motore.



LIMPIADOR INYECTORES Y CARBURADORES GASOLINA
CARBURATOR & FUEL INJECTOR CLEANER
PULITORE INIETTORI E CARBURATORI

Ref.		PARA TRATAR TREAT UP PER TRATTAMENTO	MOTOR ENGINE MOTORI
GE21204	355 ml		Gasolina / Gasoline / Benzina
GE15210	355 ml	130 l.	Diesel

Mejora la potencia y aceleración. Lubrifica todo el sistema de combustible. Maximiza el ahorro de combustible. Alarga la vida de los inyectores.
Improves power and acceleration. Lubricates entire fuel system. Maximizes fuel economy. Extends life of injectors and engine.
Migliora l'accelerazione. Lubrifica tutto il sistema di combustione. Allunga la vita degli iniettori.

GOLD EAGLE



GE21204



GE15210

LIMPIADOR DEPOSITOS
FUEL TANK CLEANER
PULITORE SERBATOI

Ref.		PARA TRATAR TREAT UP PER TRATTAMENTO
STA93664	1,9 l.	950 L
STA93116	473 ml	1,9 L

Star brite STAR TRON

Excepcionalmente efectivo en la limpieza de lodos y algas en depósitos de gasolina o diesel. Retrasa la formación de nuevas algas que puedan contaminar el combustible. Nuevo y revolucionario aditivo que reemplaza los costosos sistemas de limpieza de los depósitos de combustible.
Exceptionally effective at cleaning sludge and algae from gasoline and diesel tanks. Slows the recurrence of new algae that can contaminate fuel. A revolutionary new additive that replaces expensive fuel polishing and tank cleaning.
Eccezionale efficacia nella pulizia dal fango e alghe nel serbatoio benzina o diesel. Ritarda la formazione di nuove alghe che possono contaminare il combustibile. Nuovo e rivoluzionario additivo che rimpiazza i costosi sistemi di pulizia dei serbatoi del combustibile.



STA93664



STA93116

NEW

RECLUBE

Lubricantes marinos



LUBRICANTES
LUBRICANTS
LUBRIFICANTI

ACEITE 2 STROKES TC-W3
2-STROKE TC-W3 OIL
OLIO 2 STROKES TC-W3

RECLUBE

Especialmente formulado para motores marinos de 2 tiempos. Inhibidor de corrosión y herrumbre. Gran capacidad de limpieza de las partes internas del motor (pistón, bujías...), evita el pegado de segmentos y la formación de depósitos. Alta fluidez a bajas temperaturas.
Niveles de calidad: **NMMA TC-W3** (Asociación General de Constructores Marinos)
Specially formulated for 2-stroke marine engines. Excellent anti-wear protection for the internal parts of the engine. When the engine is not in use, it effectively protects from corrosion and rust. Very effective in maintaining the internal parts of the engine (pistons, spark plugs, etc.) clean, avoiding piston rings from sticking and sediments accumulating.
Quality levels: **NMMA TC-W3** (National Marine Manufacturers Association)
Formulazione specificamente studiata per motori marino a 2 tempi. Eccellente protezione contro l'usura dei componenti interni del motore. Garantisce un'alta protezione contro la corrosione e la ruggine. Contribuisce in maniera significativa a mantenere pulite le parti interne del motore (pistone, candela, ecc.), evita l'aderenza delle fasce del pistone e la formazione di depositi. Alta fluidità a basse temperature.
Livello di qualità: **NMMA TC-W3** (Associazione statunitense dei produttori per la nautica)



Ref.		
REC2TU6	1 L	6
REC2TU3	5 L	3

NEW

ACEITE 100% SINTÉTICO SAE 5W40
100% SYNTHETIC OIL
OLIO 100% SINTETICO

RECLUBE

Lubricante marino 100% sintético. Excelente fluidez en frío, facilita el arranque y reduce los desgastes de motor. Evita el pegado de segmentos al dispersar lodos, barnices y otros productos de oxidación a altas temperaturas. Contiene inhibidores antiherrumbre y anticorrosión.
100% synthetic lubricant designed for all types of 4T petrol engines. Good fluidity in cold temperatures facilitates performance and reduces engine wear. It avoids piston rings from sticking by clearing dirt, varnish and other oil oxidation deposits when subject to high temperatures. Contains effective anti-rust and anti-corrosion inhibitors that protect the engine in the marine environment.
Lubrificante 100% sintetico pensato per motori a benzina 4T di ogni tipo. Buona fluidità a freddo, facilita la messa in moto e riduce l'usura del motore. Evita l'aderenza delle fasce del pistone, disperdendo fanghi, lacche e altri prodotti derivanti dall'ossidazione dell'olio ad alte temperature. Contiene efficaci inibitori antiruggine e anticorrosione, per proteggere il motore in ambiente marino.



Ref.		
REC5W40U6	1 L	6
REC5W40U3	5 L	3

NEW

MULTIGRADE HIGH PERFORMANCE
SAE 15W40

RECLUBE

Lubricante multigrado marino, superior al nivel SHPD, especialmente formulado para motores marinos turboalimentados. Contiene inhibidores de corrosión, oxidación, herrumbre y antiespumantes. Capacidad detergente, reduce los depósitos en válvulas y pistones. Excelentes cualidades dispersantes antilodos.
Marine multigrade oil, exceeds the SHPD performance level, especially formulated to meet the demanding requirements of 4-stroke diesel turbocharged engine manufacturers in the marine environment. Contains effective corrosion, oxidation, rust and foam inhibitors. Avoids the need to clean the cylinder liners, typical of powerful supercharged engines. Excellent detergent effect that reduces sediments in valves and pistons. Very good dispersion qualities that prevent sludge in cold temperatures.
Olio marino multigrado, con prestazioni oltre il livello SHPD, specificamente formulato per soddisfare le particolari esigenze dei motori diesel a 4 tempi turboalimentati in ambiente marino. Contiene efficaci inibitori contro corrosione, ossidazione, ruggini e formazione di schiuma. Evita la lucidatura delle camicie dei cilindri tipica dei motori sovralimentati di alta potenza. Eccelente capacità detergente, riduce i depositi in valvole e pistoni. Ottime qualità disperdenti che impediscono la formazione di fanghi a freddo.



Ref.		
REC15W40U3	5 L	3

NEW

ACEITE SINTÉTICO 4 TIEMPOS SAE 25W40
4 STROKES SYNTHETIC OIL
OLIO SINTETICO 4 TEMPI

Lubricante semisintético para motores con cargas y RPM elevadas. Excelentes inhibidores de corrosión, oxidación y desgaste. Buenas propiedades de arranque en frío, antiespumantes incorporados.
Semi-synthetic oil for 4-stroke engines suitable for engines with high RPM and heavy loads. Lubrication of all engine components, great anti-corrosion, anti-oxidation and anti-wear properties. Good performance in cold conditions. Keeps the engine clean and increases protection against corrosion in saline water environments.
Olio semisintetico per motori a 4 tempi, adatto a motori con elevati RPM e carichi pesanti. Conforme alle norme definite dalla NMMA per i nuovi motori. Lubrificazione di tutti i componenti del motore, elevate proprietà anticorrosione, antiossidazione e antiusura. Buone proprietà di avvio a freddo. Mantiene pulito il motore e aumenta la protezione contro la corrosione in acqua salata.



Ref.		
REC25W40U3	5 L	3

NEW

ACEITE SINTÉTICO PREMIUM SAE 10W30 / 10W40
SYNTHETIC PREMIUM OIL
OLIO SINTETICO PREMIUM

Lubricante marino reforzado con bases sintéticas, para motores gasolina 4T fueraborda e intraborda. Especificaciones NMMA FC-W. HTHS elevado, asegura viscosidad a elevadas temperaturas. Anticorrosivo con antioxidantes incorporados, elevadas propiedades antiespumantes.
Marine lubricant strengthened with a synthetic base, especially formulated for outboard and inboard 4T petrol engines, with NMMA FC-W specifications. With a high HTHS, it ensures great viscosity at high temperatures.
Better anti-oxidant resistance. Improved anti-foaming properties.
Lubrificante marino potenziato con basi sintetiche, specificamente formulato per motori a benzina 4T fuoribordo ed entrobordo, a norma specifiche NMMA FC-W. Con indice HTHS più elevato, garantisce un'alta viscosità a temperature elevate. Aumenta la protezione anticorrosione. Maggior resistenza all'ossidazione. Proprietà antischiuma migliorate.



Ref.		
REC10W30U6	1 L	6
REC10W30U3	5 L	3
REC10W40U6	1 L	6
REC10W40U3	5 L	3

NEW

ACEITE ATF. TRANSMISIÓN AUTOMÁTICA
ATF FLUID. AUTOMATIC TRANSMISSION
OLIO ATF. TRASMISSIONE AUTOMATICA

Fluido hidráulico marino sintético tipo ATF. Especialmente indicado para transmisiones automáticas, servomecanismos y direcciones asistida.
Formula sintética de elevada viscosidad, incorpora anticorrosivos y antiespumantes.
ATF synthetic hydraulic fluid. Especially suited for automatic transmissions, servo-devices, power-assisted steering.
Great anti-wear properties that prolong the life of the mechanism. Great anti-ageing properties and prevents deposit formation. Provides a smooth performance without transmission knocks. Provides high protection against corrosion and excellent fluidity at low temperatures. Prevents foaming and provides rubber seal stability.
Fuido idraulico sintetico di tipo ATF. Specificamente indicato per trasmissioni automatiche, servomeccanismi, servotimoni.
Eccellente trasmissione di potenza, formula sintetica ad alta durata. Alta capacità antiusura, per prolungare la vita utile dei meccanismi. Alta resistenza all'invecchiamento e alla formazione di fanghi. Garantisce un funzionamento fluido e senza scatti della trasmissione. Alta protezione contro la corrosione ed eccellente fluididità a basse temperature. Bassa formazione di schiuma e stabilità in presenza di guarnizioni di gomma.



Ref.		
RECATFU3	5 L	3

NEW

ACEITE PARA TRANSMISIÓN IPS SAE 75W90
OIL FOR IPS TRANSMISSION
OLIO PER TRASMISSIONE IPS

RECLUBE

Lubricante marino sintético GL-5 para transmisiones IPS y reductoras. Soporta elevadas temperaturas internas sin descomponerse así como cargas considerables sin causar desgaste. Excelente protección a cualquier temperatura.
GL-5 synthetic oil of the highest quality for marine drives and IPS transmissions. It can also withstand very high temperatures without breaking down. Withstands heavy loads preventing wear.
Olio sintetico GL-5 di altissima qualità per s-drive, trasmissioni IPS e riduttori. In quanto olio sintetico, garantisce un'eccellente protezione a basse ed elevate temperature. Può inoltre sostenere altissime temperature senza decomporsi. Sostiene carichi considerevoli senza provocare usura.



Ref.		
REC75W90U6	1 L	6
REC75W90U3	5 L	3

NEW

ACEITE PARA TRANSMISIÓN SAE 80W90
OIL FOR TRANSMISSION
OLIO PER TRASMISSIONE

RECLUBE

Lubricante marino para transmisones de motores intraborda y fueraborda de los principales fabricantes, que requieren aceites con una calidad API GL 5. Consulte el manual de usuario antes de elegir el lubricante.
GL-5 synthetic oil of the highest quality for marine drives and IPS Oil recommended for the transmission of inboard and outboard engines of the main manufacturers that require API GL 5 quality oils. Read the user manual before choosing a lubricant.
Olio sintetico GL-5 di altissima qualità per s-drive, trasmissioni IPS e riduttori. Olio consigliato per trasmissioni entrobordo e fuoribordo dai principali produttori che richiedono oli di qualità API GL 5. Consultare il manuale d'uso prima di scegliere il lubrificante.



Ref.		
REC80W90U3	5 L	3

NEW

ACEITE PARA TRANSMISIÓN SAE 75W140
OIL FOR TRANSMISSION
OLIO PER TRASMISSIONE

RECLUBE

Lubricante marino de alto rendimiento para transmisiones. Excelentes prestaciones que evitan el desgaste y presiones extremas, la temperatura ambiente y condiciones de trabajo no alteran su capacidad lubricante.
High performance oil designed for marine transmissions. Excellent performance that prevents wear and extreme pressure, providing maximum protection to the transmission; temperatures and working conditions do not alter its lubricating effect.
Olio ad alto rendimento per trasmissioni nautiche. Eccellenti prestazioni che evitano usura e pressioni estreme, garantendo la massima protezione della trasmissione; la temperatura ambiente e le condizioni di lavoro non ne modificano le proprietà lubrificanti. Temperatura e rumore ridotti grazie alla riduzione dell'attrito.



Ref.		
REC75W140U3	5 L	3

NEW

ACEITE SINTÉTICO 2 TIEMPOS
2 CYCLE SYNTHETIC OIL
OLIO SINTETICO 2 TEMPI

Premium Plus
El uso continuo del aceite para motores fueraborda de 2 tiempos ayudará a reducir la corrosión y la acumulación de carbón, a la vez que proporciona una lubricación superior a los componentes internos del motor.
Continued use of 2-cycle outboard oil will help reduce corrosion and carbon build-up while providing superior lubrication for internal engine components.
L'uso continuato di olio per motori fuoribordo a 2 tempi riduce la corrosione e i depositi di carbonio fornendo nel comntempo lubrificazione eccellente ai componeneti interni del motore.

Ref.	R.O. OEM		
RM92-858026QB1U6	92-858026QB1	1 l.	6
RM92-858027QB1U3	92-858027QB1	3,8 l.	3



RM92-858026QB1U6



RM92-858027QB1U3

Aceite de mezcla para motores tipo OPTIMAX / DFI.
Oil for engines type OPTIMAX / DFI.
Olio miscela per motori tipo OPTIMAX / DFI.

Ref.	R.O. OEM		
RM92-858037QB1U3	92-858037QB1	3,8 l.	3



ACEITE HIGH PERFORMANCE
HIGH-PERF GEAR LUBE
OLIO HIGH PERFORMANCE

Ref.	R.O. OEM	SAE		
RM92-858064QB1U6	92-858064QB1	90W	1 l.	6
RM92-858065QB1U2	92-858065QB1	90W	9,5 l.	2

Aceite **sintético** de altas prestaciones. Para colas de transmisión mecánica.
High performance **synthetic** Lower Unit Gear Lube for mechanical drives.
Olio **sintetico** di alta prestazione. Per piedi poppieri a trasmissione meccanica.



RM92-858064QB1U6



RM92-858065QB1U2

ACEITE 4 TIEMPOS
4-STROKE OIL
OLIO 4 TEMPI

Ref.	R.O. OEM	SAE		
RM92-8M0086220U6	92-8M0086220	10W-30	1 l.	6
RM92-8M0086221U3	92-8M0086221	10W-30	3,8 l.	3
RM92-8M0086227U3	92-8M0086227	25W-40	3,8 l.	3



RM92-8M0086220U6



RM92-8M0086221U3

SAE 25W-40
Aceite **sintético** para motores tipo VERADO.
Synthetic oil for engines type VERADO.
Olio **sintetico** per motori tipo VERADO..



RM92-8M0086227U3

ACEITE MOTORES GASOLINA
GASOLINE ENGINES OIL
OLIO MOTORE BENZINA

Ref.	R.O. OEM	SAE		
RM92-8M0086224U3	92-8M0086224	25W-40	3,8 l.	3



ACEITE MOTORES DIESEL
DIESEL ENGINES OIL
OLIO MOTORE DIESEL

Ref.	R.O. OEM	SAE		
RM92-8M0096794U3	92-8M0096794	15W-40	3,8 l.	3



ACEITES SINTÉTICOS
SYNTHETIC OILS
OLIO SINTETICO

Ref.	SAE		
LUB11564U12	80W 90	1 l.	12
LUB11565	80W 90	19 l.	1

Especialmente indicados para los motores de gran cilindrada o de uso frecuente. Reduce el grado de fricción y calentamiento. No se mezcla con el agua. No anula las garantías de los fabricantes.
A synthetic gear lube that protects high-performance lower units in extreme operating conditions. Highly recommended for all engines over 100 hp. Will not avoid manufacturers' warranties.
Indicato specialmente per motori di grande cilindrara o di uso frequente. Riduce il grado di attrito e riscaldamento. Non si mescola con l'acqua. Non annulla la garanzia del produttore.


LUB11564U12



LUB11565

ACEITE TRIM / TILT
POWER TRIM & TILT FLUID
OLIO TRIM / TILT

Ref.		
LUB11578U12	280 g.	12

Proporciona la viscosidad y lubricación necesaria para asegurar el perfecto funcionamiento de la bomba alargando la vida de los retenes y juntas.
Power Trim & Tilt fluid. Formulated to provide viscosity and lubricity necessary to ensure proper pump performance and seal life.
Fornisce la viscosità e la lubrificazione necessaria per assicurare il perfetto funzionamento della pompa allungando la vita delle guarnizioni.



ACEITE MINERALES
MINERAL GEAR OILS
OLIO MINERALE

Ref.	SAE		
LUB11540U12	80W 90	290 g	12
LUB11552U12	80W 90	1 l.	12
LUB11546	80W 90	19 l.	1

Para colas de transmisión mecánica. Especialmente indicados para los motores de gran cilindrada o de uso frecuente. Fabricado con aditivos especiales para proveer una máxima durabilidad e inhibidores de la corrosión para una mayor protección contra el óxido y la corrosión.
Lower Unit Gear Lube for mechanical drives. Lower Unit Gear Lube. Ideal for modern outboard and stern drive lower units. Will not avoid manufacturers' warranties.
Per piedi poppieri a trasmissione meccanica. Indicato specialmente per motori di grande cilindrata o di uso frequente. Fabbricato con additivi speciali per fornire una massima durata e impedire la corrosione per una maggiore protezione contro l'ossidazione e la corrosione.



LUB11540U12



LUB11552U12



LUB11546

ACEITE MINERAL FUERABORDAS
2-CYCLE OIL
OLIO MINERALE PER FUORIBORDO

Ref.	R.O. OEM		
LUB11591U12		1 l.	12
LUB11592		3,8 l.	1
LUB11593		9,5 l.	1
RM92-858021QB1U6	92-858021QB1	1 l.	6
RM92-858022QB1U3	92-858022QB1	3,8 l.	3
RM92-858023QB1U2	92-858023QB1	9,5 l.	2

El nuevo aceite anticarbonilla **TC-W3** supera todos los requerimientos de garantía que los fabricantes de motores exigen. Utilize el **TC-W3** para obtener mayor potencia en su motor. Provee de una mayor protección contra la carbonilla en los pistones, el resecamiento de los aros, el fallo de las bujías en el arranque y del óxido. **Recomendado para los sistemas de inyección de aceite.**
Formulated from ultra-clean base stock oil to provide superior protection against piston scuffing, bearing wear, spark plug fouling, pre-ignition and rust. This formulation has outstanding lubricity and miscibility for better mixing of fuel and oil, resulting in a cleaner running engine. Contains no phosphorus. **Recommended for oil injection systems**. Outboard motor Oil.
Il nuovo olio anticarbone TC-W3 supera tutti i requisiti di garanzia che i produttori di motori esigono. Utilizare il TC-W3 per ottenere maggior potenza nel motore. Fornisce una maggiore protezione contro i residui di combustione nei pistoni, l'essicazione delle fasce, il non funzionamento delle candele nell'accensione. **Raccomandato per i sistemi di iniezione ad olio.**



LUB11591U12



LUB11592



LUB11593


RM92-858021QB1U6


RM92-858022QB1U3



RM92-858023QB1U2

KIT ACEITE COLAS
LOWER UNIT LUBE KIT
KIT OLIO PIEDI

Ref.	
LUB11101	285 g.

Kit para cambiar el aceite mineral de las colas. Includes 2 tubes of high-viscosity lower unit gear lube.
Kit per cambiare l'olio minerale dei piedi poppieri





GRASA MARINA. INSOLUBLE AL AGUA
MARINE GREASE. NON-WATER-SOLUBLE
GRASSO MARINO. INSOLUBILE IN ACQUA

RECLUBE

Grasa marina semisintética con base de litio-calcio, de cuerpo espeso y color azul. 100% insoluble al agua, especialmente formulada para todo tipo de aplicaciones náuticas incluso prensaestopas y hélices plegables, gracias a la buena adhesión al metal.
Semi-synthetic marine grease with a lithium and calcium base, thick and blue. 100% non-water-soluble, especially formulated for all nautical uses, including cable glands and foldable propellers, thanks to good adherence to metal.
Grasso marino semisintetico a base di litio-calcio, di aspetto denso e di colore azzurro. 100% insolubile in acqua, specificamente formulato per applicazioni nautiche di tutti i tipi, compresi premistoppa ed eliche pieghevoli, grazie all'alta aderenza ai metalli.

Ref.		
RECGREU1	5 Kg	1
RECGREU12	400 g	12



NEW

GRASA MARINA
MARINE GREASE
GRASSO MARINO

Ref.	PISTOLA GUN PISTOLA		
LUB11400	RECT30190	85 g	4
LUB11402	RECT30201	400 g	1
LUB11406	LUB30197	280 g	1
LUB11407		13,5 kg	1
LUB11404		450 g	

LubriMatic

Lubricante insoluble al agua, ideal para aplicaciones marinas. Excelente protección contra fricciones, óxido y corrosión.
Special calcium sulfonate complex, water insoluble formula ideal for marine applications. Provides excellent corrosion protection under severe conditions caused by salt water and air.
Lubrificante insolubile all'acqua, ideale per applicazioni marine. Eccellente protezione contro l'attrito, l'ossido e la corrosione.



LUB11400



LUB11407 LUB11404



LUB11402 LUB11406

GRASA DE LITIO
LITHIUM GREASE
GRASSO AL LITIO

Ref.	
LUB11363	350 ml

LubriMatic

Grasa de litio con Teflón. Color blanco. Contiene aditivo de cinc para facilitar la limpieza y engrase.
Heavy duty white litium grease with Teflon. Contains zinc additive to facilitate cleaning and lubrication
Grasso al litio con Teflón. Colore bianco. Contiene zinco per facilitare la pulizia e oliatura.



HERRAMIENTAS
TOOLS
ATTREZZI

PISTOLAS DE GRASA
LEVER GREASE GUNS
PISTOLE GRASSO

PISTOLA GUN PISTOLA	MANGUERA 30 cm HOSE 30 cm TUBO 30 cm
RECT30201	RECT10212

NEW

Pistola de grasa. Capacidad: 600 cc. Incluye manguera curvada y conector standard. Presión máxima 16.000 psi. Ideal para engrasar crucetas, cables de dirección, cañas de motor fuerborda, piñones y cualquier otra parte del motor que precise engrase.
Standard Lever grease gun. Capacity: 600 cc. Includes curved pipe and std. coupler. The Max pressure for grease gun is 16000psi. Ideal for greasing spreaders, steering wires, rods outboard engine, gear bearing and other parts of the engine that needs greasing.
Pistola di grasso. Capacità 600 cc. Include tubo flessibile curvo e connettore standard. La pressione massima della pistola è 16000psi. Ideale per ingrassare cavi dello sterzo, barre del motore fuorbordo, ingranaggi e qualsiasi altra parte del motore che abbia bisogno di lubrificazione.

RECmar



RECT30201



NEW

RECT10212

KIT PISTOLA + GRASA
MIDGET GREASE GUN KIT
KIT PISTOLA + GRASSO

Ref.	
RECT30190	1

RECmar NEW

Kit compuesto de una pistola pequeña y muy versátil que permite la salida del tubo conector frontal o superior. Presión máxima 300 k/cm^2). Incluye un bloqueador para mantener el cartucho en posición y tubo de salida de 14 cm. Admite cartuchos de 3 onzas (85 g) o grasa a granel.
Marine corrosion control lubrication kit. Small, versatile gun allows for front or top pipe placement. Barrel takes 3 oz. grease cartridge or can be bulk loaded. Develops up to 4,500 psi.
Kit composto da una pistola piccola e molto versatile che permette l'uscita del grasso dal tubo frontale o superiore. Pressione massima 300 k/cm^2. Include un blocco per tenere la cartuccia in posizione, il tubo è da 14 cm. Utilizza cartuccia da 85 gr. o grasso sfuso.



Ref.	
LUB30197	1

Pistola para tubos de grasa. Incluye manguera flexible de 14 cm y adaptador standard.
All purpose gun operates handy squeeze tubes. Includes 2-11/16" pipe and plastic push-type coupler.
Pistola per tubi di grasso. Include tubo flessibile da 14 cm e adattatore standard.



lubriMatic

KIT ENGRASADORES
METRIC GREASE FITTINGS
KIT LUBRIFICATORI

Ref.	
LUB11957	8

Kit compuesto por 8 engrasadores métricos de 6 mm (4 rectos, 2 de 45º y 2 de 90º).
Includes eight 6mm metric fittings:
4 straight, 2 of 45º and 2 of 90º.
Kit composto da 8 lubrificatori metrici da 6 mm (4 dritti, 2 da 45º e 2 da 90º).



lubriMatic

Ref.	
RECT11958	4

NEW

Kit de 4 engrasadores métricos de 6 mm de 90º.
Includes four 6 mm metric fittings of 90º.
Kit composto da 8 lubrificatori metrici da 6mm da 90º.



RECmar

PISTOLA DE ACEITE
BOTTLE GREASE PUMP
POMPA OLIO

Ref.
REC55005

NEW

Pistola para acoplar en los envases de botella de 1 l. LUB11552 y LUB11564U12. Se suministra con kit de adaptación con válvula antiretorno.
Lower unit quart pump. Complete with metal threaded filler fitting.
Pistola da accoppiare a bottiglie da 1 lt. LUB11552 e LUB11564U12. Si vende con kit di accoppiamento con valvola anti-ritorno.



RECmar

KIT CAMBIO DE ACEITE
OIL CHANGE KIT
KIT CAMBIO OLIO

Ref.				
SH8050-305-426	13 l.	14,1 l/m	12 V / 4,7 A	406 x 318 mm

Bomba reversible, para cambio de aceite instalada sobre un bidón portátil con mangueras de extracción y 2,5 m de cable eléctrico con pinzas.
Reversible pump kit for oil change, winterizing and liquid transfer.
Hose kit and 3,5 gal. storage container.
Pompa reversibile, per cambio dell'olio. Installata sopra un bidone portatile con tubo di estrazione e 2,5 m di cavo elettrico con pinze.



SHURflo

BOMBA EXTRACTORA
LOWER UNIT PAIL PUMP
POMPA ESTRATTRICE

Ref.
LUB55011

lubriMatic

Bomba extractora para bidones de aceite de 19 litros. LUB11546 y LUB11565. Puede acoplarse directamente a las colas. Se suministra con adaptador roscado para las colas americanas habituales.
For bulk filing of lower units and stern drives. Designed to fit 35lb/5 gal on per pails.
Pompa estrattrice per bidoni d'olio da 19 litri. LUB11546 e LUB11565 Si può collegare direttamente ai piedi. Si vende con adattatori per i piedi poppieri abituali.



BOMBA DE TRASVASE
DRILL PUMP
POMPA TRAVASO

Ref.	
SH3010-000	760 l/h

Bomba extractora de aceite o trasvase de líquidos. Se acopla a los taladros eléctricos con portabrocas de 6 mm. Incluye manguera y tubo para aceite.
Ideal for pumping water or oils. Includes 2,4 m hose. Drill shaft: 6 mm.
Pompa estrattrice olio o travaso di liquidi. Si accoppia ai trapani elettrici con morsetti di 6 mm. Incluso tubo dell'olio.

SHURflo



BOMBA DEPÓSITO ACEITE
PUMP-TANK PAIL OIL
POMPA ESTRAZIONE OLIO

Ref.	
SSPELO5	5,5 l.

Sistema completo con un depósito de 5,5 l. Tapa superior con triple función: llenado, varilla nivel y tapón de apretura de seguridad. 2,4 m de manguera de suministro y 2 conectores de motor universales. Llene el depósito con aceite de motor, presurice el tanque con aire (50-100 psi), conecte la manguera al motor, abra la válvula del depósito y en pocos segundos el llenado está realizado.
Comes complete with 5 quart capacity tank, triple purpose top (oil fill/dipsticj measure/patented presure release safety cap) 8 ft. oil supply hose and 2 universal engine connector fittings. Simply fill the tank with engine oil, pressurize tank with air (50-100 psi) connect pre-lube oil supply hose to engine oil sending unit port, open tank flow-control valve, and in just a few seconds prelube is complete.
Sistema completo per controllo perdite olio all'interno dei blocchi motore; deposito da 5,5lt fornito di tubo da 2,4 mt con due connettori universali. Riempire il motore con un livello d'olio adeguato, mettere in pressione la pompa (50-100 psi), e collegarla all'attacco del sensore pressione olio. In questo modo si può verificare se il blocco motore presenta perdite.



BOMBA GEASECASE POMPA	ADAPTADOR MÉTRICO (NO SUZUKI) METRIC ADAPTOR (NO SUZUKI) ADATTATORE METRICO (NO SUZUKI)	ADAPTADOR SUZUKI SUZUKI ADAPTOR ADATTATORE SUZUKI
REC55133GF	REC55133M	REC5 5133S

Para llenado de colas. Con válvula de ventilación para evitar derrames.
With check valve venting system to avoid overflow
Per mettere l'olio nei piedi poppieri. Con valvola di sfiatto per evitare fuoriuscite.

RECmar®



REC55133M



REC55133S



EXTRACTOR FILTROS
OIL FILTER WRENCH
ESTRATTORE FILTRI

Ref.
REC70720

Llave para filtros de 65 a 110mm.
Filter wrench from 65 to 110mm.
Chiave per filtri da 65 a 110mm.

RECmar®

NEW



EXTRACTORES DE ACEITE MANUALES
OIL MANUAL EXTRACTORS
POMPA OLIO MANUALE

Ref.
GS20151

GOLDENSHIP

Bomba manual para extraer el aceite de motor. Cuerpo de PVC y latón. Incluye tubos de nylon flexible.
Made of solid brass and PVC. With removable tubing for easy operation and cleaning.
Pompa manuale per estrarre l'olio dal motore. Corpo in PVC e ottone. Include tubi in nylon flessible.



Ref.		KG	
GS20080	4 l.	2.1 kg	496 x 204 mm
GS20081	6 l.	2.4 kg	648 x 204 mm
GS20082	18 l.	4.9 kg	700 x 350 mm

Incluye 3 tubos de Ø9.8, 6.7 y 5.8 mm. Temperatura máxima 100ºC. Cuando está lleno se para automáticamente.
With 3 tubes: Ø9.8, 6.7 & 5.8 mm. Maximum temperature 100 ºC. When full it automatically stops.
Include tubi da: Ø9.8, 6.7 e 5.8 mm. Temperatura massima 100 ºC. Quando pieno arresta automaticamente



GOLDENSHIP



GS20080



GS20081



GS20082

Ref.	
GS20084	7 l.
GS20085	9 l.

NEW



GS20084 GS20085

KIT EXTRACTOR DE POLEAS
PULLER TOOL KIT
KIT ESTRATTORE PULEGGE

Ref.
SSP4600

Extractor de polea contrapesos. Contiene 5 juegos de tornillos de diferentes medidas.
Harmonic ballancer puller. 5 sets of screws are provided.
Estrattore pulegge. Contiene 5 kit di viti di differenti misure.



Ref.
SSPHBP100K



Kit para extraer e instalar poleas. Para uso en todos los motores Ford, GM y Chrysler. También puede utilizarse para volantes de dirección y poleas en general. Esfuerzo máximo recomendado: 20 kg.
Harmonic ballancer puller and installation tool kit. Use on all Ford, GM & Chrysler engines. Heavy duty tool. Can also be used for steering wheels and pulleys
Kit per estrarre e installare pulegge in tutti i motori Ford, GM e Chrysler. Si può utilizzare per volani di direzione e pulegge in generale. Carico massimo: 20 kg.

EXTRACTOR COJINETES
DRIVER BEARING
ESTRATTORE CUSCINETTI

Ref.	R.O. OEM
REC91-34569A1	91-34569A1

NEW



EXTRACTOR IMPULSORES
IMPELLER REMOVAL
ESTRATTORE GIRANTE

Ref.	Ø	
GS20198	65 mm	2 1/2"
GS20199	77 - 127 mm	3" - 5"

Extractor para impulsores flexibles de bombas, motores fueraborda e interiores.
Flexible impeller removal tool, suitable for all marine flexible impellers of water pumps, outboard and inboard engines.
Estrattore per giranti di pompe di motori fuoribordo e entrobordo.

GOLDENSHIP



EXTRACTOR COJINETES Y HÉLICES
PROP AND BEARING PULLER
ESTRATTORE CUSCINETTI E ELICHE

Ref.
REC90095

RECmar®

Extractor de cojinetes y hélices, con patas. Para todos los cojinetes Mercruiser y la mayoría de las hélices.
Prop and bearing carrier puller. Capacity: 5 Tons (Min). For Mercruiser All Style Bearing Carrier and Most Props.
Estrattore cuscinetti e eliche. Per tutti i cuscinetti Mercruiser e la maggior parte delle eliche.





Para hélices y cojinetes antiguos
For prop and old style bearing carrier.
Per eliche e cuscinetti vecchi.



Para cojinetes modernos
For new style bearing carrier.
Per cuscinetti moderni.

EXTRACTOR PIÑONES Y COJINETES
UNIVERSAL PULLER PLATE
ESTRATTORE PIGNONE E CUSCINETTI

Ref.		
REC91-00001	1 1/4" - 2 1/4"	30 - 50 mm
REC91-00002	2 1/4" - 3 1/2"	50 - 75 mm
REC91-37241	3" - 4 1/2"	75 - 105 mm

NEW

RECmar®



JUEGO DE MACHOS
TAP AND DIE SET
FILIERA

Ref.
CRA952343



En pulgadas.
Garantía de por vida.
In inches.
Lifetime warranty.
In pollici.
Garantita a vita.

JUEGO DE LLAVES
MECHANICAL TOOL SET
CASSETTA ATTREZZI

Ref.
CRA935154



154 llaves en métrico y en pulgadas para un completo trabajo en motores.
Garantía de por vida.
154 pcs. Mechanics tool set in metric & inches. Lifetime warranty.
154 chiavi metriche e in pollici per un lavoro completo nel motore.Garantita a vita.

HERRAMIENTA AROS-PISTONES
RING COMPRESOR KIT
KIT FASCE-PISTONI

Ref.
SSP4213



Kit herramientas para la instalación de aros y pistones. Incluye 6 bandas de 7 a 11 cm.
Ring compressor kit for pistons. Includes 6 band 2-7/8" - 4-3/8"
Kit per montare le fasce dei pistoni.
Include 6 bande da 7 a 11 cm.

RECmar®

Ref.	PARA AROS Y PISTONES RING COMPRESSOR PISTONS PER FASCE E PISTONI
SSP4206	127 mm Ø 2 1/8" - 5"
SSP4207	178 mm Ø 3 1/2" - 7"

RECmar®



KIT LLAVE HÉLICE
PROP WRENCH KIT
KIT CHIAVE ELICA

Ref.	R.O. OEM	TURECA NUT DADO
REC91-859046Q4	HONDA 89-89206-ZW7-000AH MERCURY 91-821887T1 MCM 91-859046Q4	1 1/6"

Mercury Mariner 75 - 300 HP
Force V4, V6
Mercruiser Alpha / Bravo
Honda BF75-BF130
Suzuki DF60 - DF225 HP
Nissan / Tohatsu 70-140 HP
Yamaha Sterndrives
Yamaha 50-250 HP
OMC Cobra / Volvo SX
Jonhson Evinrude V4 / V6 / V8

RECmar®



LLAVE DINAMOMÉTRICA
TORQUE WRENCH
CHIAVE DINAMOMETRICA

Ref.
CRA944595



Con escala en 20 - 150 pies/libras y 33.9 - 210 N.m
Incrementos cada 1 pie/libra y 1,4 N.m
Dado de conexión: 1/2"
Dimensiones 518 x 35 x40 mm
Scale in 20-150 ft-lbs. 33.9 - 210 N.m
Increases each 1 ft-lbs. & 1,4 N.m
1/2" drive.
Dimensions: 518 x 35 x 40 mm
Con scala da 20 - 150 piedi /libra e 33.9 - 210 N.m
Incremento di 1 pie / libra e 1,4 N.m
Dado attacco: 1/2"
Dimensione 518 x 35 x40 mm.

PULIDORA
ENGINE CYLINDER HONE
PULITRICE CILINDRI

PULIDORA HONE PULITRICE	KIT RECAMBIO KIT SPARE KIT RICAMBIO
CRA904633	CRA946331

Para pulir los cilindros de los bloques. Garantizada de por vida.
Quikly removes the glaze from engine cylinder walls before installing new piston rings. Lifetime warranty.
Per pulire i cilindri dei blocchi. Garantita a vita.



CRA946331

PIEDRAS PULIDORA
Kit de 3 piedras para recambio de la pulidora.
ENGINE CYLINDER HONE
3 pieces spare part for Hone.
KIT SPAZZOLE
Kit da 3 spazzole di ricambio per la pulitrice.



CRA904633

CHISPÓMETRO
SPARK GAP TESTER
SCINTILLOMETRO

Ref.	CILINDROS CYLINDERS CILINDRI
REC5119766	8
REC004	1

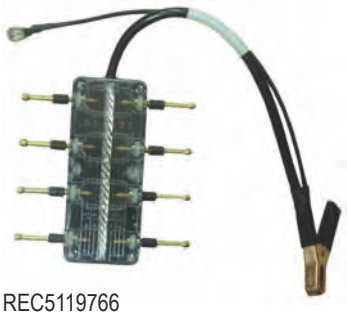

REC5119766



REC004

RECmar®

Se puede comprobar la chispa con el motor en funcionamiento.
Good for checking spark on running engine.
Si può provare la scintilla con il motore in funzione.

HERRAMIENTA VÁLVULA
VALVE SPRING COMPRESSOR
ATTREZZO VALVOLE

Ref.
SSP4265

RECmar®

Herramienta para el montaje y desmontaje de válvulas. Incluye tres juegos de mordazas.
Manual valve spring compressor. Universal. Includes 3 jaw sets.
Attrezzo per montare e smontare le valvole. Include 3 kit per misure differenti.





LLAVE FRENO VOLANTE
FLYWHEEL HOLDER
CHIAVE FRENO VOLANTE

Ref.
REC5515100

RECmar®

Para fuerabordas.
For outboards.
Per fuoribordo.



KIT GALGAS ROSCA
TOOL TRI-GAGE
KIT MISURAZIONE FILI

Ref.	Tipo de rosca / Type of thread / Tipo di passo
GS41416	MÉTRICA = 0.75 a / to 3.0'

Kit de galgas para identificar los diámetros y pasos de roscas de los tornillos.
Quickly identifies the correct thread pitches and bolt diameters.
Kit per identificare il diametro e il passo dei cavi.



COMPRESÍMETRO
COMPRESSION TESTER KIT
MANOMETRO

Ref.
CRA902171

Para motores gasolina con bases GM o Ford.
For gas engines with GM or Ford base.
Per motori benzina con base GM e Ford.



VACUÓMETRO DOBLE FUNCIÓN
PRESSURE / VACUUM TESTER
VACUOMETRO DOPPIA FUNZIONE

Ref.
REC55134

Presión y vacío. Ideal para comprobar las colas.
Combination unit that does pressure and vacuum testing in one units. recommended to test drives.
Pressione e sottovuoto. Ideale per il controllo dei piedi.

RECmar®



INTERRUPTOR ARRANQUE
REMOTE STARTER
INTERRUTTORE AVVIAMENTO

Ref.
CRA902175



KIT 4 ALARGADORES CABLE BUJÍAS
EXTENSION 4 WIRES
KIT 4 PROLUNGA CAVI CANDELE

Ref.	
REC5119902	18 cm / 7"
REC5119903	60 cm / 24"

RECmar®



REC5119902



REC5119903

FONENDOSCOPIO
SPARK GAP TESTER
FONENDOSCOPIO

Ref.
REC91-00003

NEW



RECmar®

Instrumento de precisión, resistente a golpes, detecta fácilmente ruidos en motores, cojinetes y otras partes móbiles. Incluye varilla de test, trompeta y auriculares.
Sensitive, shockproof instrument, easily locates noises in engines bearings and other moving parts. Includes aluminium alloy probe / needle, surgical PVC, rubber trumpet and plastic earphones.
Strumento di precisione, resistente a colpi, rileva facilmente rumori nel motore, nei cuscinetti e altre parti mobili. Include la tromba e gli auricolari.

PISTOLA PUESTA A PUNTO
TIMING LIGHT
PISTOLA MESSA A PUNTO

Ref.
CRA921023



Con regulador de avance.
0-60 advance scale.
Con regolatore avanzamento.

TACÓMETRO ÓPTICO
OPTICAL TACHOMETER
TACOMETRO OTTICO

Ref.
TEC384



Profesional portátil controlado por microprocesador y con base de tiempos de cristal de cuarzo de gran precisión.
Medidor de RPM hasta 99.999.
Precisión: +/- (0,05% + 1 d.)
Resolución: 0,1 (hasta 9.999,9)
Distancia óptima de medida: de 50 a 150 mm. Hasta 300 mm en función de luz ambiente. Retención de la última lectura en pantalla y registro lectura máxima y mínima del periodo de medida.

Professional portable microprocessor-controlled and with time base of quartz crystal of high precision.
RPM meter up to 99,999
Accuracy: + /- (0.05 % + 1 d.)
Resolution: 0.1 (up to 9,999.9)
Optimal distance measure: 50 to 150 mm. Up to 300 mm depending on ambient light. Retention of the latest reading on screen reading and record the maximum and minimum measurement period.

Professionale portatile controllata da un microprocessore e con display a cristalli di quarzo di alta precisione.
Misura in RPM fino a 99.999.
Precisione: +/- (0,05% + 1 d.)
Risoluzione: 0,1 (fino 9.999,9)
Distanza ottima di misurazione: da a 50 a 150 mm. Fino a 300 mm. Funziona con luce ambiente. Memoria dell'ultima lettura nello schermo e registro lettura massima e minima del periodo di misurazione.

CINTA REFLECTANTE PARA TACÓMETRO TEC384
REFLECTIVE TAPE FOR TACHOMETER TEC384
BANDA PER TACOMETRO TEC384

Ref.
TEC786

MULTITESTER DIGITAL
DIGITAL MULTITESTER
MULTITESTER DIGITALE

Ref.
TEC145

NEW



Multímetro de rango manual con 32 rangos de medida de nueva generación y protección CAT.III 1000V, con amplio display iluminado y símbolos de función en pantalla.
- Multímetro digital de $3^{1/2}$ díg. (1999)
- Medidas de tensión CC/CA (200mV - 750V)
- Medidas de corriente CC/CA (2mA - 20A)
- Medidas de resistencia (200Ω-200mΩ), continuidad, Diodos y hFe
- Medida de capacidad, frecuencia y temperatura
- Retención de lectura Hold
- Protector de goma antigolpes.

Manual range multimeter with 32 new generation measurement ranges and CAT.III 1000V protection, with large illuminated display and function symbols on the screen.
- $3^{1/2}$ digital multimeter (1999)
- DC/AC voltage measurements (200mV - 750V)
- DC/AC current measurements (2mA - 20A)
- Resistance measurements (200Ω-200mΩ), continuity, Diodes and hFe
- Measurement of capacity, frequency and temperature
- Hold Reading retention
- Anti-shock rubber protector.

Multimetro manuale con 32 campi di misura di nuova generazione e protezione CAT.III 1000 V, con ampio display illuminato e simboli di funzione sullo schermo.
- Multimetro digitale $3^{1/2}$ (1999)
- Misure di tensione DC / AC (200mV - 750V)
- Misure di corrente CC / CA (2 mA - 20 A)
- Misure di resistenza (200Ω-200mΩ), continuità, diodi e hFe
- Misure di capacità, frequenza e temperatura
- Ritenzione di lettura Hold
- Protezione in gomma anti-shock.

VACUÓMETRO SINCRONIZADOR
VACUUMMATE ALLWEATHER
VACUOMETRO

Ref.
TCMVRM5

Vacuómetro, sincronizador de admisión, analizador dinámico de fugas y tacómetro. Impermeable e insumergible con una funda especial. Posee mayor estabilidad que los indicadores analógicos o que cualquier otro sistema. Se autorregula a los cambios de presión barométrica. Alimentación con corriente continua de 12 V, se puede utilizar con cualquier batería de embarcación o vehículo o con un adaptador de entrada a la red (230V/12V). Indicadores LED de batería descargada y de alimentación no adecuada. Contiene: Cable y pinzas por alimentación 12V, tubos de santoprene de conexión, 2 juegos de adaptadores flexi-rígidos, caja de almacenaje.

Vacuumate allweather, 4 x carb/ throttle valve.Shock resistant composite-moulded polyurethane and polycarbonate casing for maximum strength and resilience. Self-calibrates for barometric changes. Solid state sensors are drop proof. It has internal rechargeable 1,5Ah 7,2V NiMH batteries providing up to 6 hours autonomy. Battery power is conserved by auto-switch-off 5 minutes after last being used and LEDs use full power only when measurements are taken. Kit includes custom travel case, battery cord-set, T-connector & 2 full sets of unique flexi-rigid.

Vacuometro, sincronizzatore d'aspirazione, analizzatore dinamico di fughe e tachimetro. Impermeabile e con una custodia speciale. Possiede maggior sensibilità degli indicatori analogici o con altri sistemi. Si autoregola al cambio di pressione. Alimentazione con corrente continua da 12 V, si può utilizzare con qualsiasi batteria per imbarcazioni, veicoli e con un adattatore di entrata da 230V/12V. Indicatore LED di batteria scarica e di alimentazione non corretta. Contiene: cavi e pinze per alimentazione 12V, tubi di connessione, 2 adattatori flexi-rígidi, scatola per conservare l'attrezzo.



PINZA AMPERIMÉTRICA
AMPERIC NIPPER
PINZA AMPEROMETRICA

Ref.
TEC218

Tenaza autorango y multifunción para AC y DC.
Diámetro maxilar: 30 mm
Display de 3 3/4 dígitos. Máx. 3999.
Puede realizar medidas en:
Corriente AC/DC: 40A/400A
Precisión: +/-(1,9% + 5 d. en AC)
Precisión: +/-(2,5% +10 d. en DC)
Ancho de banda: 50Hz - 500Hz (AC)
Resolución:AC/DC 10mA. 100mV.
Resistencia: 400 Ohms.

Iron autoranging and multifunction for AC and DC.
Jaw diameter: 30 mm
Display of 3 3/4 digit. Max. 3999.
Measurements in: AC/DC current: 40A/400A
Precision: +/-(1,9% + 5 d. en AC)
Precision: +/-(2,5% +10 d. en DC)
Bandwidth: 50 Hz - 500 Hz (AC)
Resolution: AC/DC 10mA. 100mV.
Resistence: 400 Ohms.

Pinza multifunzione per AC e DC.
Diametro max: 30 mm.
Display da 3 3/4 dígitale. Máx. 3999.
Può realizzare misurazioni in:
Corrente AC/DC: 40A/400A.
Precisione: +/-(1,9% + 5 d. en AC)
Precisione: +/-(2,5% +10 d. en DC
Banda larga: 50Hz - 500Hz (AC)
Risoluzione:AC/DC 10mA. 100mV.
Resistenza: 400 Ohms.



TERMÓMETRO MULTIFUNCIONAL
INFRARED THERMOMETER
TERMOMETRO MULTIFUNZIONALE

Ref.
TEC423

Termómetro multifunción digital, por rayos infrarrojos.
Emisividad fija: 0,95 Rango: -20ºC + 320ºC.
Lectura en grados Centígrados y Farenheit.
Precisión +/- 2% Resolución: 1ºC
Distancia óptima de medida: de 6 a 60 cm.
Retención de la última lectura. Autoapagado.

Multifunction digital infrared thermometer.
Fixed emissivity: 0.95 range: - 20 °C 320 °C.
Reading in Celsius and Fahrenheit.
Precision +/-2% Resolution: 1ºC
Distancia optimal measurement: 6 to 60 cm.
Retention of the last reading. Auto Off function.

Termometro multifunzione digitale, a infrarrossi.
Misurazione: 0,95 Rango: -20ºC + 320ºC.
Lettura in gradi Centigradi e Farenheit.
Precisione +/- 2% Risoluzione: 1ºC
Distanza ottimale di misurazione: da 6 a 60 cm.
Memoria dell'ultima lettura. Autospegnimento.



SOPORTES DESCARGA EMBARCACIONES
BOAT HANDLING JACKS & STANDS
SUPPORTI SCARICO IMBARCAZIONI

RECH10

KIT DESCARGA BARCOS

Para cargar o descargar embarcaiones de los remolques o cuna. Los remolques pueden entrar y salir de entre los gatos hidráulicos libremente, facilitando su tarea. Levantan embarcaciones de hasta 18 toneladas. Su recorrido de elevación es de 51 cm. Equipado con válvula de bloqueo que permite mantener el barco indefinidamente en la posición deseada. Puede actuar sobre tierra, grava, asfalto o cemento, tanto en la tienda, como en el varadero o exposición.

BOAT HANDLING JACKS KIT

Work station for bottom repair & cleaning. Trailer rolls in out past jacks, allowing you to take boats on or off trailers easily. Jacks have an outo lock allowing boats to be left on indefinitely. Can be used on dirt, gravel, black top or cement. Can be used anywhere! Shop, yard, showroom. Lifts boats up to 40,000 lbs.

KIT SCARICO BARCHE

Per caricare o scaricare imbarcazioni da rimorchi o sostegni. I rimorchi possono entrare e uscire tra i cric idraulici liberamente, facilitando il compito. Solleva imbarcazioni fino a 18 tonnellate. Escursione max di 51 cm. Fornito di valvola di blocco che permette di mantenere la barca nella posizione desiderata per diverso tempo. Può essere usato su terra, ghiaia, asfalto o cemento, come in negozio o in esposizione.



Ref.	DESCRIPCIÓN	DESCRIPTION	DESCRIZIONE	CANTIDAD UNITS QUANTITÀ
RECH10	Soportes hidráulicos	Jacks	Supporti idraulici	4
	Soportes	Straight arms	Supporti	4
	Soportes inclinados 25 cm	10" drop arms	Supporti inclinati 25 cm	4
	Soportes asiento barco	4" x 18" contact pads	Supporti appoggi barche	4
RECH10-1/4	Soportes hidráulicos	Jacks	Supporti idraulici	1
	Soportes	Straight arms	Supporti	1
	Soportes inclinados 25 cm	10" drop arms	Supporti inclinati 25 cm	1
	Soportes asiento barco	4" x 18" contact pads	Supporti appoggi barche	1

Ref.	DESCRIPCIÓN	DESCRIPTION	DESCRIZIONE	CAPACIDAD CAPACITY CAPACITÀ	ALTURA HEIGHT ALTEZA
REC12	Soporte inclinado (25,4 cm)	Drop arm (25,4 cm)	Supporti elevatori (25,4 cm)	1.125 kg	59,7 - 107,9 cm
REC13	Soporte inclinado (38 cm)	Drop arm (38 cm)	Supporti elevatori (38 cm)	1.125 kg	47 - 95,2 cm
REC14	Soporte inclinado (50,8 cm)	Drop arm (50,8 cm)	Supporti elevatori (50,8 cm)	1.125 kg	31,8 - 80 cm
REC15	Soporte recto	Straight arm	Supporti		83,8 - 132 cm
	1ª posición	1st Pin hole	1ª posizione	900 kg	
	2ª posición	2nd Pin hole	2ª posizione	1.800 kg	
	3ª posición	3rd Pin hole	3ª posizione	3.600 kg	
	4ª posición	4th Pin hole	4ª posizione	4.500 kg	
REC16	Soporte elevador (12,7 cm)	Riser extension (12,7 cm)	Supporti elevatori (12,7 cm)	4.500 kg	96,5 - 144,8 cm
REC17	Soporte elevador (25,4 cm)	Riser extension (25,4 cm)	Supporti elevatori (25,4 cm)	4.500 kg	109,2 - 157,5 cm
REC18	Soporte estándar (10 x 45,7 cm)	Standard Pad 10 x 45,7 cm)	Supporti standard (10 x 5,7 cm)		
REC19	Soporte plus (15,2 x 76,2 cm)	Pad Plus (15,2 x 76,2 cm)	Supporti Plus (15,2 x 76,2 cm)	6.900 kg +	


REC12
REC14

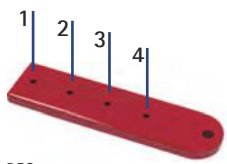

REC15


REC16
REC17


REC18
REC19

RECAMBIO PARA RECH10
SPARE FOR RECH10
RICAMBIO PER RECH10

Ref.			
RECJAT	Rueda	Wheel	Ruota
RECNSCYL	Pistón	Piston	Pistone
RECNSTVALVE	Llave de recambio	Spare T key	Chiave di ricambio
RECCPH	Manetas	Handle	Maniglia

REF			
YARSLKTN	Kit reparación	Repair kit	Kit riparazione


RECCPH


YARSLKTN


RECNSCYL


RECJAT


RECNSTVALVE

SOPORTES PARA EMBARCACIONES
BOAT STANDS
SUPPORTI PER IMBARCAZIONI

Ref.
RECED36

Soporte para embarcaciones. Carga hasta 1.500 kilos.
Economy dolly system. 3000 lbs. capacity
Carrello per imbarcazioni. Carica fino a 1.500 chili.



RUEDA DE RECAMBIO
SPARE WHEEL
RUOTA DI RICAMBIO

Ref.
RECED36C



SOPORTES PARA COLAS
STANDS FOR STERN DRIVES
SUPPORTI PER PIEDI

Ref.
RECJO6HD

Carro con pistón hidráulico para la instalación de todo tipo de colas. Permite desmontar o montar colas, una sola persona. Especialmente útil en embarcaciones con plataforma integrada. Construido con brazos extra largos de sujección y base con 4 ruedas neumáticas. Gran capacidad de elevación para colas de peso extra. También en colas de doble hélice. Varias regulaciones.
Stern drive installer. Works in all makes and models. Allows one man to remove and install stern drives. Especially helpful on boats with integrated swim platforms. Built with extra long clamping arms and wheel base, plus heavyduty lifting capacity for those extra heavy drives. Also works great on dual prop drives. Unique low cost shop tool. 4 air tires allow for rugged yard use.
Carro con pistone idraulico per l'installazione di tutti i tipi di piedi. Permette ad una persona di smontare o montare i piedi da solo. Specialmente utile nelle imbarcazioni con piattaforma integrata. Costruito con larghi bracci di fissaggio e una base con 4 ruote pneumatiche. Grande capacità di sollevamento per piedi con peso extra. Anche per piedi con doppia elica. Varie regolazioni.



RECAMBIOS PARA RECJO6HD
SPARE FOR RECJO6HD
RICAMBIO PER RECJO6HD

Ref.	DESCRIPCIÓN	DESCRIPTION	DESCRIZIONE
RECJOCYL	Pistón	Piston	Pistone
RECKRW	Rueda trasera	Rear wheel	Ruota posteriore
RECKFW	Rueda delantera	Front wheel	Ruota anteriore
RECJO-10	Suplemento 25 cm	Suplement 10"	Supplemento 25 cm
RECJHANDLE	Maneta	Handle	Maniglia
RECJSPRING	Muelle	Spring	Mola


RECOCYL


RECKRW


RECKFW


RECJO-10


RECJHANDLE


RECJSPRING

Ref.
YARSR5

Soporte para 5 colas. Mantiene el taller limpio y organizado. Protege las colas de golpes y daños.
Holds 5 stern drives. Keeps shop looking neat and clean. Protects drives from being cratched and damaged.
Supporto per 5 piedi. Mantiene l'officina pulita e organizzata. Protegge i piedi dai colpi e dai danni.



RUEDA DE RECAMBIO
SPARE WHEEL
RUOTA DI RICAMBIO

Ref.
YARSRC



SOPORTES PARA MOTORES
STANDS FOR ENGINES
SUPPORTI PER MOTORI



RECmar

Ref.
RECTOOL1

NEW

Soporte de trabajo giratorio 360º con ruedas. Para todo tipo de motores; GM, FORD, VOLVO. Ideal para reparaciones completas.
Allow engine to be rotated 320º. Adjustable mounting plate will accommodate all engine types.
Carrello supporto motore, permette il movimento per 360º utile per lavorazioni in coppa. Fornito di ruote piene, può montare tutti i blocchi GM, FORD, VOLVO.

Ref.	MOTORES ENGINES MOTORI
YARES2	GM, FORD, VOLVO
YARFHA	Kit FORD
YARCHA	Kit GM

YARDARM

YARES2
Soporte trabajo giratorio 360º con ruedas. Para todo tipo de motores; GM, FORD, VOLVO. Ideal para reparaciones completas. Se le pueden adaptar los soportes referencias YARCHA para GM y YARFHA para FORD y probar motores en funcionamiento.
Allows engine to be rotated 360º adjustable mounting plate will accommodate all engine types.
Supporto lavoro girevole 360º con ruote. Per tutti i tipi di motori; GM, FORD, VOLVO. Ideale per riparazioni complete. Si possono adattare i supporti di riferimento YARCHA per GM e YARFHA per FORD e provare i motori in funzione.

YARFHA
Kit soportes motores FORD, / Ford holder arms. / Kit supporto motore FORD

YARCHA
Kit soportes motores GM / GM engines arms / Kit supporto motore GM.





Soporte trabajo reparación todo tipo de colas.
Work station. Holds all kind of drives.
Supporto lavoro per riparare tutti i tipi di piedi.

RECmar

NEW

ACCESORIOS
ACCESSORIES
ACCESSORI

Ref.	DESCRIPCIÓN	DESCRIPTION	DESCRIZIONE
RECS3	Completo	Complete	Completo
RECS4	Soporte bracket fueraborda	outboard bracket support	supporto bracket fuoribordo
RECS5	soporte bloque fueraborda	Outboard block support	Supporto blocco fuoribordo
RECS6	Soporte colas	Drives support	Supporto piedi



BUJÍAS / SPARK PLUGS / CANDELE



CHAMPION

Ref.	R.O. / OEM
CHACJ14	CHAMPION CJ14
CHAD16	CHAMPION D16
CHAJ6C	CHAMPION J6C
CHAJ8C	CHAMPION J8C
CHAL76V	CHAMPION L76V
CHAL77JC4	CHAMPION L77JC4
CHAL78C	CHAMPION L78C
CHAL78V	CHAMPION L78V
CHAL78YC	CHAMPION L78YC
CHAL78YC6	CHAMPION L78YC6
CHAL82C	CHAMPION L82C
CHAL82YC	CHAMPION L82YC
CHAL82YCC	CHAMPION L82YCC
CHAL86C	CHAMPION L86C
CHAL87YCC	CHAMPION L87YCC
CHAL90C	CHAMPION L90C
CHAN2C	CHAMPION N2C
CHAN3C	CHAMPION N3C
CHAN4C	CHAMPION N4C
CHAN6YCC	CHAMPION N6YCC
CHAP10Y	CHAMPION P10Y
CHAP8Y	CHAMPION P8Y
CHAQC10PEPB	CHAMPIONQC10PEPB
CHAQC10WEP	CHAMPIONQC10WEP
CHAQL16V	CHAMPION QL16V
CHAQL6VC	CHAMPION QL6VC
CHAQL77CC	CHAMPION QL77CC
CHAQL77JC4	CHAMPION QL77JC4
CHAQL78C	CHAMPION QL78C
CHAQL78YC	CHAMPION QL78YC
CHAQL78YC6	CHAMPION QL78YC6
CHAQL82C	CHAMPION QL82C
CHAQL82YC	CHAMPION QL82YC
CHAQL86C	CHAMPION QL86C
CHAQL87YC	CHAMPION QL87YC
CHARA6HC	CHAMPION RA6HC
CHARA8HC	CHAMPION RA8HC
CHARC12YC	CHAMPION RC12YC
CHARC9MC4	CHAMPION RC9MC4
CHARC9YC	CHAMPION RC9YC
CHARC9YC4	CHAMPION RC9YC4
CHARD16	CHAMPION RD16
CHARJ12YC	CHAMPION RJ12YC
CHARJ14YC	CHAMPION RJ14YC
CHARJ8C	CHAMPION RJ8C
CHARL82C	CHAMPION RL82C
CHARL82YC	CHAMPION RL82YC
CHARL86C	CHAMPION RL86C
CHARN11YC4	CHAMPION RN11YC4
CHARN2C	CHAMPION RN2C
CHARN3C	CHAMPION RN3C
CHARN4C	CHAMPION RN4C
CHARN4YC	CHAMPION RN4YC
CHARN5C	CHAMPION RN5C
CHARN6YC	CHAMPION RN6YC
CHARN7YC	CHAMPION RN7YC
CHARN9YC	CHAMPION RN9YCC
CHARS12PYP	CHAMPION RS12PYP
CHARS12YC	CHAMPION RS12YC 3.OLX
CHARS15LYC	CHAMPION RS15LYC
CHARS9YC	CHAMPION RS9YC
CHARV12YC	CHAMPION RV12YC
CHARV15YC4	CHAMPION RV15YC4
CHARV8C	CHAMPION RV8C
CHARV9IMC	CHAMPION RV9IMC
CHARV9YC	CHAMPION RV9YC
CHAUL77V	CHAMPION UL77V
CHAUL81C	CHAMPION UL81C
CHAV63C	CHAMPION V63C
CHAXC12PEPB	CHAMPION XC12PEPB
CHAZ9Y	CHAMPION Z9Y



NGK

Ref.	R.O. / OEM
NGKB10ES	NGK B10ES
NGKB5HS	NGK B5HS
NGKB6HS	NGK B6HS
NGKB6HS-10	NGK B6HS-10
NGKB7ES	NGK B7ES
NGKB7HS	NGK B7HS
NGKB7HS-10	NGK B7HS-10
NGKB8ES	NGK B8ES
NGKB8HS	NGK B8HS
NGKB8HS-10	NGK B8HS-10
NGKB9ES	NGK B9ES
NGKB9HS	NGK B9HS
NGKB9HS-10	NGK B9HS-10
NGKBKR5ES	NGK BKR5ES
NGKBKR6E	NGK BKR6E
NGKBKR6EKU	NGK BKR6EKU
NGKBKR6ES-11	NGK BKR6ES-11
NGKBKR7EKU	NGK BKR7EKU
NGKBMR4A	NGK BMR4A
NGKBP5EA-L	NGK BP5EA-L
NGKBP5HS	NGK BP5HS
NGKBP6ES	NGK BP6ES
NGKBP6HS	NGK BP6HS
NGKBP7ES	NGK BP7ES
NGKBP7HS	NGK BP7HS
NGKBP7HS-10	NGK BP7HS-10
NGKBP8HN-10	NGK BP8HN-10
NGKBP8HS-10	NGK BP8HS-10
NGKBP8HS-15	NGK BP8HS-15
NGKBPR5ES	NGK BPR5ES
NGKBPR5HS	NKG BPR5HS
NGKBPR6EFS	NGK BPR6EFS
NGKBPR6EIX	NGK BPR6EIX
NGKBPR6ES	NGK BPR6ES
NGKBPR6ES-11	NGK BPR6ES-11
NGKBPR6FS	NGK BPR6FS
NGKBPR6HS	NGK BPR6HS
NGKBPR6HS-10	NGK BPR6HS-10
NGKBPR7EIX	NGK BPR7EIX
NGKBPR7ES	NGK BPR7ES
NGKBPR7ES-11	NGK BPR7ES-11
NGKBPR7HS	NGK BPR7HS
NGKBPR7HS-10	NGK BPR7HS-10
NGKBPR8ES	NGK BPR8ES
NGKBPZ8HN-10	NGK BPZ8HN-10
NGKBPZ8HS-10	NHG BPZ8HS-10
NGKBR10ES	NGK BR10ES
NGKBR4HS	NGK BR4HS
NGKBR5HS	NGK BR5HS
NGKBR6EF	NGK BR6EF
NGKBR6ES	NGK BR6ES
NGKBR6FIX	NGK BR6FIX
NGKBR6FS	NGK BR6FS
NGKBR6FVX	NGK BR6FVX
NGKBR6HS	NGK BR6HS
NGKBR6HS-10	NGK BR6HS-10
NGKBR6S	NGK BR6S
NGKBR7ES	NGK BR7ES
NGKBR7HS	NGK BR7HS
NGKBR7HS-10	NGK BR7HS-10
NGKBR8ES	NGK BR8ES
NGKBR8ES-11	NGK BR8ES-11
NGKBR8HCS-10	NGK BR8HCS-10
NGKBR8HIX	NGK BR8HIX
NGKBR8HS	NGK BR8HS
NGKBR8HS-10	NGK BR8HS-10
NGKBR9ES	NGK BR9ES
NGKBR9HS	NGK BR9HS
NGKBR9HS-10	NGK BR9HS-10
NGKBU8H	NGK BU8H
NGKBUE	NGK BUE

Ref.	R.O. / OEM
NGKBUHW	NGK BUHW
NGKBUHW-2	NGK BUHW-2
NGKBUHX	NKG BUHX
NGKBUHXW-1	NGK BUHXW-1
NGKBUZ8H	NGK BUZ8H
NGKBUZHW	NGK BUZHW
NGKBUZHW-2	NGK BUZHW-2
NGKBZ7HS-10	NGK BZ7HS-10
NGKCR4HSB	NGK CR4HSB
NGKCR5EH-9	NGK CR5EH-9
NGKCR5HSB	NGK CR5HSB
NGKCR6E	NGK CR6E
NGKCR6HS	NGK CR6HS
NGKCR9EB	NGK CE9EB
NGKCR9EH-9	NGK CR9EH-9
NGKD6HA	NGK D6HA
NGKDCPR6E	NGK DCPR6E
NGKDCPR6EIX	NGK DCPR6EIX
NGKDCPR7E	NGK DCPR7E
NGKDPR5EA-9	NGK DPR5EA-9
NGKDPR6EA-9	NGK DPR6EA-9
NGKDPR6EB-9	NGK DPR6EB-9
NGKDPR7EA-9	NGK DPR7EA-9
NGKDPR8EA-9	NGK DPR8EA-9
NGKDR4HS	NGK DR4HS
NGKDR5HS	NGK DR5HS
NGKDR6HS	NGK DR6HS
NGKDR7EA	NGK DR7EA
NGKDR7EB	NGK DR7EB
NGKILFR6G-E	NGK ILFR6G
NGKITR4A15	NGK ITR4A15
NGKIZFR5G	NGK IZFR5G
NGKIZFR5J	NGK IZFR5J
NGKIZFR6F-11	NGK IZFR6F-11
NGKIZFR6K11	NGK IZFR6K11
NGKIZFR6K-11S	NGK IZFR6K-11S
NGKIZFR6N-E	NGK IZFR6N-E
NGKIZFR7M	NGK IZFR7M
NGKLFR4AE	NGK LFR4AE
NGKLFR5A-11	NGK LFR5A-11
NGKLFR6A-11	NGK LFR6A-11
NGKLKR7E	NGK LKR7E
NGKPR6EA-9	NGK PR6EA-9
NGKPZFR5F	NGK PZFR5F
NGKPZFR5F-11	NGK PZFR5F-11
NGKPZFR6H	NGK PZFR6H
NGKPZTR5A-15	NGK PZTR5A-15
NGKTR5	NGK TR5
NGKTR55	NGK TR55
NGKTR55IX	NGK TR55IX
NGKTR5IX	NGK TR5IX IRIDIO
NGKTR6IX	NGK TR6IX IRIDIO
NGKUR4	NGK UR4
NGKUR4IX	NGK UR4IX
NGKUR5	NGK UR5
NGKUR6	NGK UR6
NGKUR6IX	NGK UR6IX IRIDIO
NGKXR5	NGK XR5
NGKYR5	NGK YR5
NGKYR5IX	NGK YR5IX IRIDIO
NGKZFR6F-11	NGK ZFR6F-11
NGKZFR7F	NGK ZFR7F
NGKZFR7F-11	NGK ZFR7F-11

INTERRUPTORES
CUT OFF SWITCHES
INTERRUTORI

INTERRUPTOR DE PARO
STOP SWITCH
INTERRUTTORE DI STOP

Ref.	DESCRIPCIÓN	DESCRIPTION	DESCRIZIONE	
THKS-1	1 fueraborda	1 outboard	1 fuoribordo	1
THKS-2	1 intraborda	1 inboard	1 entrobordo	1
THKS-12	2 fuerabordas	2 Outboards	2 fuoribordi	1
THKS-22	2 intrabordas	2 inboards	2 entrobordi	1
THL-4	Cuerda de recambio	spare lanyard	corda ricambio	1

Interruptor de encendido para motores. Aisla los circuitos en unidades dobles para prevenir el retorno al alternador.
Emergency and stop switch. Isolates circuits on dual units to prevent feedback.
Interruttore di accensione per motori. Isola i circuiti in doppie unità per prevenire il ritorno all'alternatore.



DESCONECTADOR DE SEGURIDAD
IGNITION KILL SWITCH
INTERRUTTORE DI SICUREZZA

Ref.	R.O. OEM		
REC87-823609A17	87-823609A17	MERCURY MARINER	1
REC37800-9354	37800-9354 37800-9353	SUZUKI	1

RECmar®



REC87-823609A17



REC37800-9354

Ref.	DESCRIPCIÓN	DESCRIPTION	DESCRIZIONE	
TREC40970	Completo	Complete kit	Kit completo	1
REC40990	Cuerda tirador	Spare	corda tirante	1
GS11290	Completo	Complete kit	Kit completo	1
GS11291	Cuerda	Spare	Corda	1
GS11292	Completo	Completo	Completo	1

Interruptor de encendido para todo tipo de motores fueraborda o intraborda.
Emergency and stop switch for inboard or outboards.
Interruttore di accensione per tutti i tipi di motori entrobordo e fuoribordo.

RECmar®



REC40970- REC40990

GOLDENSHIP



GS11290 - GS11291



GOLDENSHIP
GS11292

Ref.	R.O. OEM		
REC37830-89E03	37830-84E03	SUZUKI	1
REC37820-92E03	37820-92E00	SUZUKI	1
REC69W-82575-00	69W-82575-00	YAMAHA MARINER	1
REC688-82575-01	688-82575-01	YAMAHA MARINER	1

RECmar®



REC37830-89E03



REC37820-92E03



REC69W-82575-00

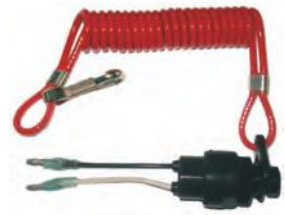

REC688-82575-01

KIT LLAVES
KILL SWITCH KEYS
KIT CHIAVI

Ref.	
GS11294	1

Kit de 8 llaves de recambio para:
Kit of 8 spare keys for:
Kit da 8 chiavi di ricambio per:
J/E - OMC - Mercury - Yamaha - Honda -Suzuki - Tohatsu.

GOLDENSHIP



LLAVES DE ARRANQUE
IGNITION STARTER SWITCHES
CHIAVE DI AVVIAMENTO

Ref.	PANEL PANEL PANNELLO	TERMINALES TERMINALS TERMINALI	POSICIONES POSITIONS POSIZIONE
MP39200	28 mm	3	3
MP39760		5-1	3
MP41070		6	3
MP41000		6	3
MP41030	15 mm	3	3
GS11150	28 mm	3	3
GS11151	30 mm	3	3
GS11152	29 mm	3	3
GS11153	30 mm	5	3
GS11154	27 mm	4	3
GS11155	15 mm	7	4
GS11156	6 mm	7	4
GS11157	6 mm	6	3
GS11158	15 mm	6	3
GS11159	16 mm	6	3

MP39200
Llave de arranque de 3 posiciones con retroceso, Off-Contacto-Arranque. Fabricada en poliester anticorrosión. Montadas por Chaparral, Baja, Celebrity, Four Winns, Larson, Rinker, Wellcraft, ChrisCraft.
3 positions, Off-Run-Start. 3 screws. Conventional
Chiave di avviamento a 3 posizioni con ritorno: Off-Contatto-Avviamento. In poliestere anticorrosione. Montato da Chaparral, Baja, Celebrity, Four Winns, Larson, Rinker, Wellcraft, ChrisCraft.



MP39760
Llave de arranque de 3 posiciones con retroceso, Off-Contacto-Arranque (Choke). Fabricada en poliester anticorrosión.
3 positions, Off-Run-Start. 5+1 screws. Magneto.
Chiave di avviamento a 3 posizioni con ritorno: Off-Contatto-Avviamento. In poliestere anticorrosione.



MP41070
Llave de arranque de 3 posiciones con retroceso, Off-Contacto-Arranque (Choke). Fabricada en poliester anticorrosión. Terminales: 6 cables. Para fuerabordas Mercury y Mariner.
3 positions, Off-Run-Start. 6 Wires. Magneto
Chiave di avviamento a 3 posizioni con ritorno: Off-Contatto-Avviamento. In poliestere anticorrosione. Terminali: 6 cavi. Per fuoribordo Mercury e Mariner.



MP41000
Llave de arranque de 3 posiciones con retroceso, Off-Contacto-Arranque (Choke). Fabricada en poliester anticorrosión. Terminales: 6 tornilllo. Para fuerabordas Mercury y Mariner.
3 positions, Off-Run-Start. 6 screws. Magneto.
Chiave di avviamento a 3 posizioni con ritorno: Off-Contatto-Avviamento. In poliestere anticorrosione. Terminali: 6 viti. Per fuoribordo Mercury e Mariner.



MP41030
Llave de arranque de 3 posiciones con retroceso, Off-Contacto-Arranque. Fabricada en poliester anticorrosión. Para montaje en paneles hasta 15 mm. Montadas por Bayliner y SeaRay desde el año 1990.
3 positions, Off-Run-Start. 3 screws. Conventional.
Chiave di avviamento a 3 posizioni con ritorno: Off-Contatto-Avviamento. In poliestere anticorrosione. Da montare in pannelli fino a 15 mm. Montato da Bayliner e SeaRay dall'anno 1990.



GS11150
Llave de arranque de 3 posiciones con retroceso, Off-Contacto-Arranque. Fabricada en latón con frontal cromado. 15A 12V
Chrome plated brass face nut and brass back-up nut. 3 positions with return, Off-Ignition-Start. 15A 12V
Chiave di avviamento a 3 posizioni con ritorno Off-Contatto-Avviamento. In ottone con frontale cromato. 15A 12V



GS11151
Fabricada en latón con frontal protector de goma. 3 posiciones con retroceso, Off-Contacto-Arranque.
Made in brass with rubber cap protector. 3 positions with return, Off-Ignition-Start.
Prodotta in ottone con parte frontale in gomma, 3 posizioni con ritorno, Off-Contatto-Avviamento.



GS11152
Fabricada en plástico con frontal protector de goma. 3 posiciones con retroceso, Off-Contacto-Arranque.
Made in plastic with rubber cap protector. 3 positions with return, Off-Ignition-Start.
Prodotta in plastica con parte frontale in gomma 3 posizioni con ritorno, Off-Contatto-Avviamento.



GS11153
Fabricada en plástico con frontal protector de goma. 3 posiciones con retroceso, Off-Contacto-Arranque.
Made in plastic with rubber cap protector. 3 positions with return, Off-Ignition-Start.
Prodotta in plastica con parte frontale in gomma 3 posizioni con ritorno, Off-Contatto-Avviamento.



GS11154
Fabricada en latón con frontal protector de goma. 3 posiciones con retroceso, Off-Contacto-Arranque.
Made in brass with rubber cap protector. 3 positions with return, Off-Ignition-Start.
Prodotta in ottone con parte frontale in gomma. 3 posizioni con ritorno, Off-Contatto-Avviamento.



GS11155
Fabricada en plástico. 4 posiciones con retroceso, Accesorios-Off-Contacto-Arranque.
Made in plastic with rubber cap protector. 4 positions with return, Acc-Off-Ignition-Start.
Prodotta in plastica. 4 posizioni con ritorno, Blower-Off-Contatto-Avviamento.



GS11156
Fabricada en plástico. 4 posiciones con retroceso, Accesorios-Off-Contacto-Arranque.
Made in plastic with rubber cap protector. 4 positions with return, Acc-Off-Ignition-Start.
Prodotto in plastica. 4 posizioni con ritorno, Blower-Off-Contatto-Avviamento.



GS11157
GS11158
Fabricada en plástico. 6 terminales. 3 posiciones con retroceso, Off-Contacto-Arranque (Starter).
Made in plastic. 3 positions with return, Off-Ignition-Start (Choke). 6 terminals.
Prodotta in plastica. 6 terminali 3 posizioni con ritorno, Off-Contatto-Avviamento(Starter).



GS11159
Fabricada en plástico. 6 terminales con cables incluidos. 3 posiciones con retroceso, Off-Contacto-Arranque (Starter).
Made in plastic. 3 positions with return, Off-Ignition-Start (Choke). 6 terminals with wires included.
Prodotta in plastica. 6 terminali con cavi inclusi. 3 posizioni con ritorno, Off-Contatto-Avviamento (Starter).



ACCESORIOS DIRECCIÓN
STEERING ACCESSORIES
ACCESSORI DIREZIONE

MANGUERA DE PROTECCIÓN
PROTECTIVE CABLE SYSTEM
TUBO DI PROTEZIONE

Manguera de protección para los cables de dirección, mando, etc. desde la salida del casco hasta el motor, presentando un sólo núcleo limpio y ordenado. Color gris.
This system gives a good protection to the service cables of outboard engines against dirt and corrosion. Available in two diameters, complete with fittings in black colour. Hose in grey colour.
Tubo di protezione per i cavi di timoneria, comando, etc. dall'uscita del raccordo fino al motore, presentando un solo nucleo pulito e ordinato. Colore grigio.

Ref.	DESCRIPCIÓN	DESCRIPTION	DESCRIZIONE				
GS41164	Kit Completo	Complete kit	Kit completo	80 cm		1	
GS41160	Terminal casco	Hull end fitting	Fine raccordo		1		
GS41161	Manguera	Hose	Tubo	15 m			1
Gs41162	Terminal motor	Engine end fitting	Fine motore		1		



Ref.	DESCRIPCIÓN	DESCRIPTION	DESCRIZIONE				
GS41165	Kit Completo	Complete kit	Kit completo	80 cm		1	
GS41165	Terminal casco	Hull end fitting	Fine raccordo		1		
GS41167	Manguera	Hose	Tubo	15 m			1
Gs41168	Terminal motor	Engine end fitting	Fine motore		1		



TERMINALES PROTECTORES
RIGGING FLANGES
TERMINALE PROTETTORE

Ref.	DESCRIPCIÓN	DESCRIPTION	DESCRIZIONE	
THRFHU-1	Manguera	Hose	Tubo	■
THRFHU-2	Manguera	Hose	Tubo	□
THRFFHP-1	Casco	Hull	Racordo	■
THRFFHP-2	Casco	Hull	Racordo	□
THRFH-1	Manguera 5m	Hose 5m	Tubo 5m	■
THRFH-2	Manguera 5m	Hose 5m	Tubo 5m	□

Terminales para las mangueras protectoras de cables, etc. Permite la instalación exterior de la bomba de gasolina.
Rigging flanges with fuel hose ports. Split design of union allows installation on pre-rigged boats.
Terminale per tubi protettori dei cavi, etc. Permette l'installazione esterna della pomp


THRFHU-1, THRFHU-2


THRFFHP-1, THRFFHP-2


THRFH-1, THRFH-2

ARO PROTECTOR
RIGGING FLANGE
ANELLO PROTETTORE

Protección para los cables de control y dirección. Fabricado en plástico cromado.
Finishes and protects pass thru hole for wires and cables. Chrome plated plastic.
Prottore per cavi di timoneria e comando. Prodotto in plastica cromata.

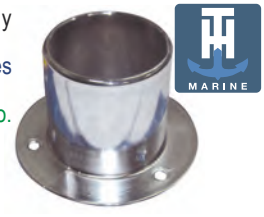

Ref.	
THRF-1CP	1

Protección de los cables de control y dirección. Vinilo marino resistente a los rayos U.V., gasolina y aceites. Se ajusta alrededor de los cables.
Finishes and protects pass thru hole for wires and cables. Rugged marine vinyl. Resists UVm gasoline and oil. Cable tie snugs around wires and cables.
Protezione dei cavi di controllo e timoneria. Vinile marino resistente ai raggi U.V., benzina e olio. Si posiziona alla fine dei cavi.

Ref.	Para agujero / For hole / Per foro		
THCB-2	2"	■	1
THCB-1	3"	■	1
THCB-4	4 1/2"	■	1
THCB-2W	2"	□	1
THCB-1W	3"	□	1
THCB-4W	4 1/2"	□	1



Protección de los cables de control y dirección. PVC color negro. Facilita una sustitución de un protector roto, sin tener que desmontar el cable. Las bridas se sujetan sobre el soporte interior rígido, manteniendo su forma original

Manufactured in PVC material, black. It allows an easy replacement of a broken one, without detaching cables from the engines. Apply the clamps in the dedicated grooves, holding tightly the grommet on the rigid inner core, keeping its natural shape.

Protezione di cavi di controllo e di comando. PVC di colore nero. Facilita la sostituzione di un protettore rotto, senza smontare i cavi. Le flange si montano nel supporto rigido interno, mantenendo la sua forma originale.

REF		Ø (mm)	
GS41158	■	115	1



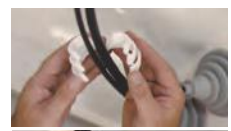





Protección de los cables de control y dirección. Caucho flexible.

Seals off water intake and protects cables, wiring and gas lines. Made of durable rubber.

Protezione dei cavi di controllo e di comando. Flessibile

REF		A (mm)	B (mm)	C (mm)	D (mm)	E (mm)
GS41180						
GS41181	■	75	74	42	3-5	9-19
GS41182	□					
GS41183						
GS41155	■	105	100	70	3-5	10-20
GS41156	□					
GS41184						
GS41185	■	175	110	80	3-5	10-30
GS41186	□					

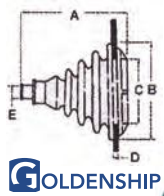



Protección de los cables de control y dirección. PVC flexible y aro rígido.
Seals off water intake and protects cables, wiring and gas lines. Made of PVC with rigid ring.
Protezione cavi di controllo e di comando. PVC flessibile con anello rigido.

REF		Ø (mm)	
GS41153	■	105	1
GS41154	□		



Protección de los cables de control y dirección. Plástico flexible color negro, con aro de fijación rígido.
Seals off water intake and protects cables, wiring and gas lines. Made of flexible plastic and rigid ring.
Protezione dei cavi di controllo e di comando. Plastica flessibile di colore nero, con anello di fissaggio rigido.

REF		Ø (mm)	
GS41157	■	90	1



FUELLE PROTECTOR
STEERING CABLE PROTECTOR
SOFFIETTO DI PROTEZIONE

Fuelle protector para cables de dirección. Se suministra con abrazaderas.
Heavy duty rubber boot for steering cables in engine end preventing lubrication from being washed away.
Soffietto di protezione per cavi di comando. Si vende con le fascette.

GOLDENSHIP

REF			Ø	
GS41152	■	20 cm	25 mm 10 mm	1

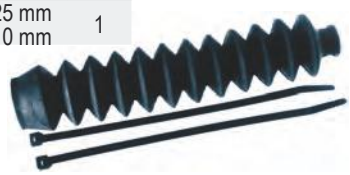

TUERCA DE ENGRASE
STEERING GUARD
DADO LUBRIFICANTE

Ref.	Para tornillos for bolts Per viti			
GS41170	7/8" Fuerabordas	7/8" Outboards	7/8" Fuoribordo	1

Tuerca engrasadora para todos los cables de dirección. Sella el cable evitando el agua y la corrosión.
Steering guard to be installed in all cable and side mounted hydraulic steering systems to lubricate clean and seal the systems. Made of stainless steel.
Dado lubrificante per tutti i cavi di timoneria.
Chiude il cavo evitando l'acqua e la corrosione.



GOLDENSHIP

ALARGO BARRA FUERABORDA
EXTENSION HANDLE
PROLUNGA BARRA FUORIBORDO

GOLDENSHIP

Ref.	
GS73135	70 cm
GS73136	60 cm --> 100 cm

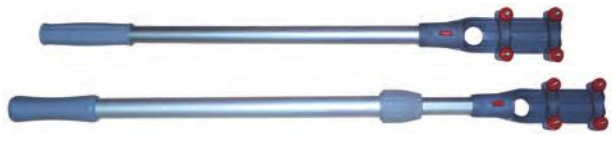

Prolongador de caña con pulsador de paro. Fabricado en aluminio anodizado y maneta de plástico.
Outboard motor extension handle with push-button to switch-off the engine. Made of anodized aluminum and plastic handle.
Prolunga con pulsante. Prodotto in alluminio anodizzato e maniglia di plastica.

PROTECTOR ESPEJO
PROTECTION PLATE
PROTETTORE SPECCHIO

GOLDENSHIP

Ref.			
GS73130	225 x 85 mm	1	
GS73131	270 x 100 mm	1	
GS73132	280 x 115 mm		1
GS73133	430 x 350 mm		1

Fabricada en plástico semirrígido. Color negro
Made in plastic. Black.
Prodotto in plastica semi. rigido colore nero



GS73130, GS73131

Fabricada en aluminio. Con soporte para terminal del cable de dirección.
Aluminum transom plate complete with support and tube for steering cable.
Prodotto in alluminio. Con supporto per i terminali dei cavi di timoneria.



GS73132

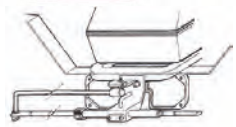

Fabricada en plástico semirrígido. Color gris
Made in plastic. Grey.
Prodotto in plastica semi-rigido colore grigio.

GS73133



Ref.	A	B	C	D	
OCE100133	390 mm	350 mm	330 mm	8 mm	1
OCE100134	390 mm	350 mm	330 mm	15 mm	

D = Grueso / Thickness / Grueso

OCEANSOUTH

Fabricada en polipropileno resistente a los rayos UV. Disponible en dos gruesos. Color blanco.
Made in solid UV resistant polypropilene. Available in two thicknesses. Colour white.
Prodotto in polipropilene resistente ai raggi UV. Disponibile in due spessori. Colore bianco.



CONTRAPLACA TRANSOM
TRANSOM SUPPORT PLATE
PIASTRA RINFORZO TRANSOM

Ref.	Para tornillos for bolts Per viti			A	B	C
THTSP-1	Superiores	Top	superiore	15"	2"	13"
THTSP-2	Inferiores	Lower	Inferiori	12"	2"	10"



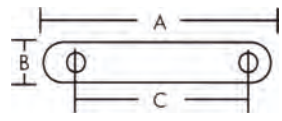

Reparte el esfuerzo de los tornillos de sujección del motor. Fabricado en aluminio de alta calidad, de 10mm de espesor.
Distributes stress of engine bolts. Manufactured in high quality cast aluminum. All plates 3/8".
Ripartisce la spinta delle viti del fissaggio del motore. Prodotto con alluminio di alta qualità, 10mm di spessore.



TH MARINE

ESTABILIZADORES
HYDROFOILS
STABILIZZATORI

ALETAS ESTABILIZADORAS
HYDROFOIL STABILIZER
ALETTE STABILIZZATRICI

Aletas para acoplar a la placa de cavitación de los motores fueraborda y colas intra-fueraborda. Se obtiene el planeo en menor tiempo. Elimina la cavitación. Mejora la sustentación. Permite mayor estabilidad y ahorro de combustible.

Gives outboards and sterndrives a performance boost.
Wipes out cavitation.
On plane in less time. Saves fuel.
Delivers true stabilization.

Alette da installare nei motori fuoribordo o nei piedi entro-fuoribordo. Planata in minor tempo. Elimina la cavitazione. Migliora la stabilità e riduce il consumo del carburante.

REF		(cm)
SRXPIJR	2,5 HP - 40 HP	18,50
SRXPI	40 HP +	18,50



SRXPIJR



SRXPI

Aletas para acoplar a la placa de cavitación de los motores fueraborda y colas intra-fueraborda. Se obtiene el planeo en menor tiempo. Elimina la cavitación. Mejora la sustentación, Permite mayor estabilidad y ahorro de combustible.
Además reduce el arrastre hidrodinámico.
Mejora la velocidad máxima.
Más eficiencia del combustible.
Diseño de montaje SIN AGUJEROS.

Gives outboards and sterndrives a performance boost.
Wipes out cavitation.
On plane in less time.
Saves fuel.
Delivers true stabilization.
Plus reduced hydrodynamic drag. Improved top-end speed. Better fuel eficiency.
NO-DRILL mounting design.

Alette per l'aggancio alla piastra di cavitazione dei motori fuoribordo e dei piedi entro-fuoribordo.
Si ottiene una planata nel minor tempo.
Elimina la cavitazione.
Migliora la stabilità e riduce il consumo del carburante.
Riduce l'attrito.
Migliora la velocità massima.
Più efficienza del carburante.
Montaggio senza fori..

REF		(cm)
SRSF	40 HP - 300 HP	18,50



Aletas para acoplar a la placa de cavitación de los motores fueraborda y colas intra-fueraborda.
Se obtiene el planeo en menor tiempo.
Elimina la cavitación. Mejora la sustentación, Permite mayor estabilidad y ahorro de combustible.
Reduce el arrastre hidrodinámico.
Mejora la velocidad máxima.
Más eficiencia del combustible.
Diseño de montaje SIN AGUJEROS
Perfil hidrodinámico pulido
Empuje mejorado
Canalización del chorro de agua

Gives outboards and sterndrives a performance boost.
Wipes out cavitation.
On plane in less time.
Saves fuel.
Delivers true stabilization.
Reduced hydrodynamic drag.
Improved top-end speed.
Better fuel eficiency.
NO-DRILL mounting design.
Sleeker hydrodynamic profile.
Captive Prop-Wash Resulting In
Improved Thrust
Fastest Hole Shot

Alette per l'aggancio alla piastra di cavitazione dei motori fuoribordo e piedi entro-fuoribordo.
Planata in minor tempo.
Elimina la cavitazione.
Migliora la stabilità e riduce il consumo del carburante.
Riduce l'attrito.
Migliora la velocità massima.
Più efficienza del carburante.
Montaggio senza fori.
Profilo idrodinamico.
Spinta migliorata.
Canalizzazione del getto dell'acqua.

REF		(cm)
SRXRIIIJR.	2,5 HP - 75 HP	18,50
SRXRIII	75 HP +	18,50





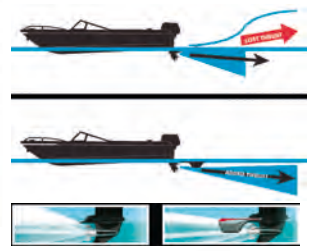



REF		(cm)
SRPRO1	40 HP - 300 HP	19,55

POWER TRIM-LIFT

POWER LIFT

Ref.	DESCRIPCIÓN	DESCRIPTION	DESCRIZIONE
CMC65001Q	Equipo con reloj indicador. Separación del espejo: 140 mm.	Kit with lift gauge. Set-Back from transom: 5-1/2".	Kit compreso di indicatore. Distanza dallo specchio: 140 mm.

Soporte con kit elevador vertical para motores fueraborda **hasta V6**. Fabricado en extrusión de aluminio con tornillos de acero inox. El motor electrohidráulico de 3.500 kg de empuje se encuentra dentro de un contenedor para una mayor protección. Tornillos de 3/4" de acero inoxidable, con tuercas de aleación de aluminio y bronce resistentes a los choques y corrosión.
Recorrido vertical: 125 mm.
Alimentación a 12V.
Dimensiones: 460 x 420 mm.

Electric hydraulic power lift transom jack with a rated thrust of 7800 lbs. For outboards up to V6. Made of 1/2" 6061 T6 alloy aluminum extrusions and stainless steel fasteners. Totally waterproof electro-hydraulic power lift transom jack with a rated thrust of 7800 lbs.
Vertical travel: 5"
Operation: 12 V.
Dimensions: 18-1/8" x 16-1/2"

Kit supporto con elevatore verticale per motori fuoribordo fino a V6. Prodotto in alluminio e viteria in acciaio inox. Il motore elettrico-idraulico da 3500 kg. di spinta si trova all'interno di un contenitore per una maggiore protezione. Viteria da 3/4" di acciaio inossidabile, dadi in alluminio e bronzo per una maggiore resistenza agli urti e alla corrosione.
Corsa verticale: 125mm.
Alimentazione a 12V.
Dimensioni: 460 x 420 mm.





Ref.	DESCRIPCIÓN	DESCRIPTION	DESCRIZIONE
CMC65201Q	Equipo con reloj indicador. Separación del espejo: 140 mm.	Kit with lift gauge. Set-Back from transom: 5-1/2".	Kit compreso di indicatore. Distanza dallo specchio: 140 mm.

Soporte con kit elevador vertical para motores fueraborda **hasta V8**. Guías de acero inox. y extrusión de aluminio con tornillos de acero inox. El motor electrohidráulico de 3.500 kg de empuje se encuentra dentro de un contenedor para una mayor protección. Tornillos de 3/4" de acero inoxidable, con tuercas de aleación de aluminio y bronce resistentes a los choques y corrosión.
Separación del espejo: 140 mm
Recorrido vertical: 125 mm
Alimentación a 12V.
Dimensiones: 460 x 394 mm

Electric hydraulic power lift transom jack with a rated thrust of 7800 lbs. For outboards **up to V8**. Made of stainless steel rails and 1/2" 6061 T6 alloy aluminum extrusions with stainless steel fasteners. Totally waterproof electro-hydraulic power lift transom jack with a rated thrust of 7800 lbs.
Set-Back from transom: 5-1/2"
Vertical travel: 5"
Operation: 12 V.
Dimensions: 18-1/8" x 15-1/2"

Supporto con kit elevatore verticale per motori fuoribordo **fino a V8.** Fabbricato in acciaio inox e alluminio con viteria in acciaio inox. Il motore elettrico-idraulico da 3500 kg. di spinta si trova all'interno di un contenitore per una maggiore protezione. Viti da 3/4" di acciaio inossidabile, e dadi in alluminio e bronzo per una maggiore resistenza agli urti e alla corrosione.
Distanza dallo specchio: 140 mm.
Corsa verticale: 125mm.
Alimentazione a 12V.
Dimensioni: 460 x 394 mm.





Ref.	DESCRIPCIÓN	DESCRIPTION	DESCRIZIONE
CMC61001Q	Equipo con reloj indicador. Separación del espejo: 254 mm.	Kit with lift gauge. Set-Back from transom: 10".	Kit compreso di indicatore. Distanza dallo specchio: 254 mm.



Ref.
THAHJM-4DP

Soporte con kit elevador vertical para motores fueraborda **hasta 75 hp**. Fabricado en extrusión de aluminio con tornillos de acero inox. de 3/4".
Dimensiones espejo: 37 x 30 cm.
Recorrido: 127 mm.
Alimentación a 12V.

Electric hydraulic power lift transom jack for outboards **up to 75 hp.** Made with extruded aluminum and stainless steel fasteners. Totally waterproof.
Footprint dimensions: 14-5/8" x 11-1/2"
Travel: 5".
Operation: 12 V.

Supporto con kit elevatore verticale per motori fuoribordo **fino a 75 hp.** Fabbricato in alluminio con viteria in acciaio inox da 3/4".
Dimensioni specchio: 37 x 30 cm.
Escursione: 127 mm.
Alimentazione a 12V.



ADAPTADORES
BACK SPACERS
ADATTATORI

Ref.
CMC20122Q



Par de cuñas de 2º inclinación para espejo de popa.
Pair of 2 degrees wedge for the transom.
Due cunei di 2º di inclinazione per lo specchio di poppa.

Ref.
CMC13022Q



Kit de adaptadores para la instalación de motores con palomillas.
Adaptors kit for motors mounted with transom clamps.
Kit di adattatori per l'installazione di motori con piastre.

POWER TRIM & TILT

Ref.	DESCRIPCIÓN	DESCRIPTION	DESCRIZIONE
CMC13002Q	Equipo trim & tilt	Kit trim & tilt	Kit trim & tilt
CMC13001Q	Equipo con reloj indicador	Kit with trim gauge	Kit compreso di indicatore







Soporte con kit de Power Trim y Tilt para motores fueraborda **hasta 115 HP**. Fabricado en extrusión de aluminio con tornillos de acero inox. El motor electrohidráulico de 3.500 kg de empuje se encuentra dentro de un contenedor para una mayor protección.

Recorrido:	Trim = 20°	Trim & Tilt = 90°
Separación del espejo:	152 mm	Alimentación a 12V.

Electric hydraulic Tilt & Trim with a rated thrust of 7800 lbs. for outboards up to 115 HP. Made with extruded aluminum and stainless steel fasteners.

Travel:	Trim = 20°	Trim & Tilt = 90°
Set-Back from transom:	6"	Operation: 12 V.

Supporto con kit di power trim per motori fuoribordo fino 115 HP. Fabricato in alluminio con viteria in acciaio inox. Il motore elettrico-idraulico da 3500 kg. di spinta si trova dentro un contenitore per una maggiore protezione.

Distanza dallo specchio:	152 mm.	
Escursione:	Trim = 20°	Trim & Tilt = 90°
Distanza dallo specchio:	152 mm.	Alimentazione a 12V.

Ref.
CMC52100D

Soporte con kit de Power Trim y Tilt para motores fueraborda **hasta 35 HP**. Fabricado en extrusión de aluminio con tornillos de acero inox. El motor electrohidráulico de 3.500 kg de empuje se encuentra dentro de un contenedor para una mayor protección.

Separación del espejo: 140 mm
Recorrido total: 84°
Alimentación a 12V.

Electric hydraulic Tilt & Trim with a rated thrust of 7800 lbs. for outboards **up to 35 HP.** Made with extruded aluminum and stainless steel fasteners.

Set-Back from transom: 5-1/2"
Total travel: 84°
Operation: 12 V.

Supporto con kit power.trim per motori uoribordo **fino a 35 HP.** Prodotto in alluminio con viti in acciaio inox. Il motore elettrico.idraulico da 3500 kg di spinta,si trova dentro un contenitore per una maggiore protezione.

Distanza dallo specchio: 140 mm.
Escursione: 84°
Alimentazione a 12V.





MANDOS ELECTRÓNICOS DE CONTROL
ELECTRONIC CONTROLS SYSTEM
COMANDI ELETTRONICI CONTROLLO

Mandos electrónicos para el gobierno de embarcaciones con motores interiores, intra-fueraborda y fuerabordas.

Reemplaza y mejora el funcionamiento de los mandos mecánicos tradicionales, permitiendo un control más preciso y suave de las maniobras. Se suministran en kits completos con todos los componentes para sustituir de modo sencillo los mandos tradicionales, listos para instalar y operar. Sistema de conexión «CANbus» asegurando una fácil y sencilla interconexión. **Alimentación estandard 12V.** (24V Bajo demanda).

- Pueden conectarse hasta 6 puestos de control.
- Sincronización de r.p.m. en ambos motores.
- Posibilidad de aumentar y reducir las revoluciones del motor mediante ligeras pulsaciones de los botones de control.
- Puede incorporar mandos de control remoto mediante conexión «CANbus».
- Memoria de diagnósticos de avisos y alarmas.

Electronic Engine Control Systems for all type of boats with inboard, inboard/outboard or outboard engines.

Easily upgrade the traditional boat mechanical controls. Gives finger tip, precise control of your engines shift and throttle functions. Supplied in complete kits with all components required and ready to install. Latest CANbus technology for easy installation and set up. **2V Standard power** (24V on demand).

- Can be connected up to 6 control heads.
- Auto synchronization r.p.m.
- Possibility of throttle in «BUMP» mode.
- Can incorporate Handheld Remote Controls.
- Memory of diagostics checks of warning and alarms.



Comandi elettronici per il controllo delle imbarcazioni con motori entrobordo, entro-fuoribordo e fuoribordo.

Sostituisce e migliora il funzionamento dei comandi meccanici tradizionali, permettendo un controllo più preciso e delicato delle manovre.
Si vende in kit completo con tutti i componenti per sostituire in modo semplice i comandi tradizionali, con manuale di installazione e uso.
Sistema di connessione «CANbus» assicura una facile e semplice interconnessione. **Alimentazione standard 12V.** (24V Su domanda).

- Si possono connettere fino a 6 posti di controllo.
- Sincronizzazione di r.p.m. in entrambi i motori.
- Possibilità di aumentare e ridurre la rotazione del motore tramite una leggera spinta sul pulsante di controllo.
- Si possono inserire comandi di controllo remoto tramite «CANbus».
- Memoria di diagnostica, avviso e allarme.

KITS DE MANDOS
COMPLET KITS
KIT COMPLETO

1 MOTOR,INTERIOR 1 ESTACIÓN	1 INBOARD ENGINE 1 STATION	1 MOTORE ENTROBORDO 1 STAZIONE	GLE1M1EI
Actuador SA2	Actuator SA2	1 attuatore SA2	1
Mando 1 palanca - 2 pulsadores	Single Control Head - 2-buttons	Telecomando 1 leva - 2 pulsanti	1
Cable comunicación mando-actuador 12 m	Station comm. cable 40ft.	Cavo comunicazione comando-attuatore 12m	1
Resistencia terminal BUS	Terminating resistor	Resistenza terminale BUS	2
Cable alimentación DC - actuador 9 m.	Harness DC power-actuator 30ft.	Cavo alimentazione DC- attuatore 9m	1
Cable Start Interlock 9 m	Harness Start Interlock 30ft	Cablaggio start e blocco 9m	1
Cable encendido «jumper»	Harness Ignition enable jumper	Cablaggio accensione	1
Cable encendido 9 m	Harness Ignition 40ft.	Cablaggio accensione	1

KIT 2ª ESTACIÓN 1 MOTOR INTERIOR	KIT 2ND STATION 1 ENGINE INBOARD	KIT 2° STAZIONE 1MOTORE ENTROBORDO	GLE1M2EI
Mando 1 palanca - 2 pulsadores	Single Control Head - 2-buttons	Telecomando- 1 leva- 2 pulsanti	1
Cable comunicación mando-actuador 12 m	Station comm. cable 40ft.	Cavo cablaggio comando-attuatore 12m.	1



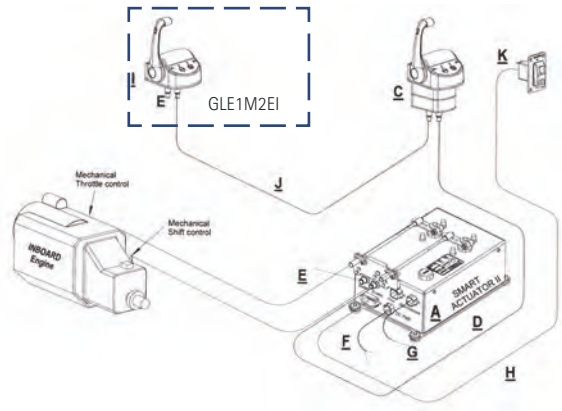

2 MOTORES INTERIORES 1 ESTACIÓN	2 INBOARD ENGINES 1 STATION	2 MOTORI ENTROBORDO 1 STAZIONE	GLE2M1EI
Actuador SA2	Actuator SA2	Attuatore SA2	2
Mando 2 palanca - 2 pulsadores	Twin Control Head - 2-buttons	Telecomando 2 leve- 2 pulsanti	1
Cable comunicación mando-actuador 12 m	Station comm. cable 40ft.	Cavo cablaggio comando-attuatore 12m	1
Cable comunicación actuador-actuador 6 m	Station comm. cable 20ft.	Cavo cablaggio comando-attuatore 6m	1
Resistencia terminal BUS	Terminating resistor	Resistenza terminale BUS	2
Cable alimentación DC - actuador 9 m.	Harness DC power-actuator 30ft.	Cavo alimentazione BUS-attuatore 9m	2
Cable Start Interlock 9 m	Harness Start Interlock 30ft	Cablaggio start e blocco 9m	2
Cable encendido «jumper»	Harness Ignition enable jumper	Cablaggio accensione	1
Cable actuador sensor tacómetro	Harness Act. enable tach sender.	Cavo attuatore sensore tachimetro	1
Cable encendido 12 m	Harness Ignition 40ft.	Cavo accensione 12m	1

KIT 2ª ESTACIÓN 2 MOTORES INTERIOR	KIT 2ND STATION 2 ENGINE INBOARD	KIT 2° STAZIONE 2 MOTORI ENTROBORDO	GLE2M2EI
Mando 2 palanca - 2 pulsadores	Twin Control Head - 2-buttons	Telecomando 2 leve-2 pulsanti	1
Cable comunicación mando-actuador 12 m	Station comm. cable 40ft.	Cavo cablaggio comando-attuatore 12m	1



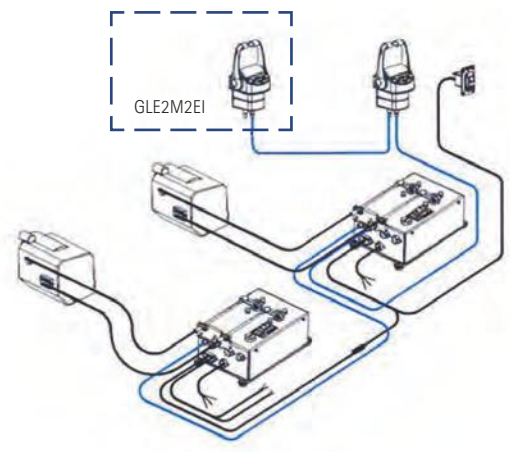

1 MOTOR INTRA/FUERABORDA O FUERABORDA 1 ESTACIÓN + TRIM	1 ENGINE I/O - OUTBOARD 1 STATION + TRIM	1 MOTORE ENTRO/FUORIBORDO O FUORIBORDO 1 STAZIONE + TRIM	**GLE1M1EC**
Actuador SA2	Actuator SA2	Attuatore SA2	1
Mando 1 palanca - 6 pulsadores	Single Control Head - 6-buttons	Telecomado 1 leva- 6 pulsanti	1
Cable comunicación mando-actuador 12 m	Station comm. cable 40ft.	Cavo cablaggio comando-attuatore 12m	1
Resistencia terminal BUS	Terminating resistor	Resistenza terminale BUS	2
Cable alimentacion DC - actuador 9 m.	Harness DC power-actuator 30ft.	Cavo alimentazione DC- attuatore 9m	1
Cable Trim/Encendido/Start interlock	Harness Trim/Ignition/Start Interlock	Cavo trim/accensione/start e blocco	1

KIT 2ª ESTACIÓN 1 MOTOR INTRA/FUERABORDA O FUERABORDA 2 ESTACIONES + TRIM	KIT 2ND STATION 1 ENG. I/O - OUTBOARD 2 STATIONS + TRIM	KIT 2° STAZIONE 1 MOTORE ENTRO/FUORIBORDO O FUORIBORDO 2 STAZIONE + TRIM	**GLE1M2EC**
Mando 1 palanca - 6 pulsadores	Single Control Head - 6-buttons	Telecomado 1 leva- 6 pulsanti	1
Cable comunicación mando-actuador 12 m	Station comm. cable 40ft.	Cavo cablaggio comando-attuatore 12m	1



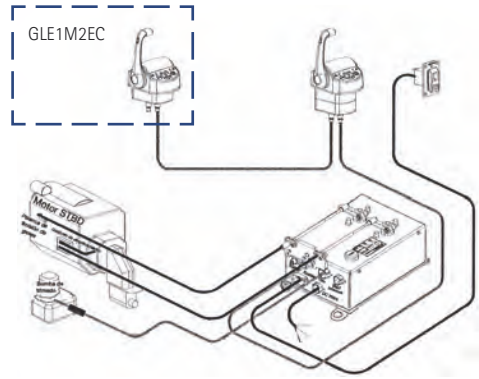

2 MOTORES INTRA/FUERABORDA O FUERABORDA 1 ESTACIÓN + TRIM	2 INBOARD ENGINS 1 STATION	1 MOTORE ENTRO/FUORIBORDO O FUORIBORDO 1 STAZIONE + TRIM	**GLE2M1EC**
Actuador SA2	Actuator SA2	Attuatore SA2	2
Mando 2 palancas - 6 pulsadores	Twin Control Head - 6-buttons	Telecomando 2 leve- 6 pulsanti	1
Cable comunicación mando-actuador 12 m	Station comm. cable 40ft.	Cavo cablaggio comando-attuatore 12m	1
Cable comunicación actuador-actuador 6 m	Station comm. cable 20ft.	Cavo cablaggio comando- attuatore 6m	1
Resistencia terminal BUS	Terminating resistor	Resistenza terminale BUS	2
Cable alimentacion DC - actuador 9 m.	Harness DC power-actuator 30ft.	Cavo alimentazione DC- attuatore 9m	2
Cable Encendido/Tacómetro babor.	Harness Ignition/Tach sender port	Cavo accensione/ tachimetro sinistra	1
Cable Tacómetro esribor.	Harness Tach sender starboard.	Cavo tachimetro destra	1
Cables Trim / Start Interlock.	Harness Trim / Start Interlock.	Cavo trim/ start e blocco	2

KIT 2ª ESTACION 2 MOTORES INTRA/FUERABORDA O FUERABORDA 2 ESTACIONES + TRIM	KIT 2ND STATION 2 ENGINE I/O - OUTBOARD 2 STATIONS + TRIM	KIT 2° STAZIONE 2 MOTORE ENTRO/FUORIBORDO O FUORIBORDO 2 STAZIONE + TRIM	**GLE2M2EC**
Mando 2 palanca - 6 pulsadores	Twin Control Head - 6-buttons	Telecomando 2 leve- 6 pulsanti	1
Cable comunicación mando-actuador 12 m	Station comm. cable 40ft.	Cavo cablaggio comando-attuatore 12m	1



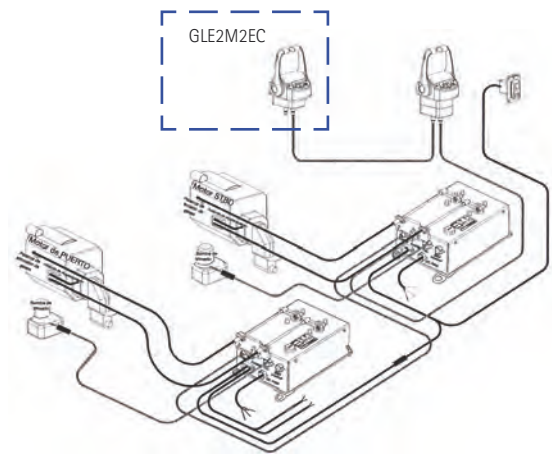

JOYSTICK

El **ProPilot** es un accesorio opcional que se puede añadir a la mayoría de los sistemas de control Glendinning existentes y nuevos, en barcos con propulsión interna y propulsores de proa / popa.
Un teclado de control proporciona la capacidad de controlar los propulsores directamente sin la necesidad de un panel separado.
Compatible con las siguientes configuraciones de motor / accionamiento:

- Reguladores de motor mecánicos o controlados electrónicamente.
- Válvulas trolling mecánicas o eléctricamente controladas (opcional).
- Transmisiones mecánicas o desplazadas eléctricamente.

Solicite el formulario de aplicación.

The **ProPilot** is an optional accessory that can be added to most existing and any new Glendinning control systems on boats with inboard propulsion and bow / stern thrusters.
An integrated thruster control keypad provides the capability to control the thrusters directly without the need for a separate thruster panel.
Compatible with the followin engine / drive configurations:

- Mechanical or electronically controlled engine throttles.
- Mechanical or electrically controlled trolling valves (optional)
- Mechanical or electrically shifted transmissions

Ask for the application form.

Il **ProPilot** è un accessorio opzionale che si può aggiungere alla maggior parte dei sistemi di controllo Glendinning esistenti e nuovi, nelle barche con propulsione di prua o di poppa.
Una tastiera di controllo consente di controllare i propulsori direttamente, senza la necessità di avere un pannello separato.
Compatibile con le seguenti configurazioni di motori:

- Queste manette controllano sia i motori elettronici sia i motori meccanici
- Trolling Valves possono essere controllate meccanicamente o elettronicamente (Opzionale);
- Trasmissione meccanica o trasmissione elettrica.

Richiedere il formulario di applicazione.

REF
GLE11450-JSGB

GLENDINNING





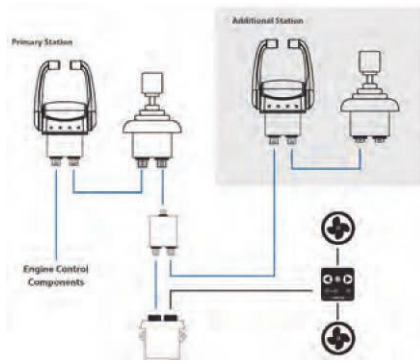

MANDOS MECÁNICOS
MECHANICAL CONTROLS
SCATOLA MECCANICHE

REF	YAMAHA 704	TRIM
REC704-48205-R0	704-48205-R0 704-48205-P1 704-48205-B1 704-48205-B0 704-48205-R0 704-48205-14 704-48205-11 704-48205-12 704-48205-13 704-48205-15 704-48205-P0	✔

NEW

Mando consola simple
Console control single
Comando di controllo simple

RECmar®



REF	YAMAHA 704	TRIM
REC704-48207-R0	704-48207-R0 704-48207-P1 704-48207-39 704-48207-31 704-48207-30 704-48207-20 704-48207-21 704-48207-22	✔

NEW

Mando consola doble
Console control double
Comando di controllo doppio

RECmar®



GAMA TELEFLEX «XTREME»

SEASTAR SOLUTIONS

Cambios mínimos en el esquema de montaje o anidamiento de cables desde Osprey o SL-3.
Impulsiones de popa e interiores. La palanca de doble función controla el acelerador y el cambio de un motor.
Enclavamiento neutro y protección de arranque en marcha (estándar) para controles de montaje lateral.
TRIM/TILT opcional en el mango.
Función de calentamiento del motor neutro (estándar).
Interruptor de apagado de emergencia del motor para controles de montaje lateral.
Acepta todos los tipos de cable OEM y 3300 / 33C.
Cumple / excede todos los estándares aplicables.

Minimal changes to mounting scheme or cable nesting from Osprey or SL-3.
Dual function lever controls both throttle and shift of one engine. Neutral interlock and start-in-gear protection (standard) for side mount controls.
Optional TRIM / TILT in the handle.
Neutral engine warm-up feature (standard).
Standard lanyard-style cut-off switch for emergency engine shut down for side mount controls.
Accepts every type of OEM and 3300/33C type cable.
Meets/exceeds all applicable standards.

Modifiche minime dello schema di assemblaggio o di nidificazione dei cavi da Osprey o SL-3.
Azionamenti severi e interni. La leva a doppia funzione controlla l'acceleratore e il cambio di un motore.
Interblocco neutro e protezione marcia in marcia (standard) per comandi di montaggio laterali.
TRIM / TILT opzionale sul manico.
Funzione di riscaldamento del motore neutro (standard).
Interruttore di arresto di emergenza del motore per comandi di montaggio laterali.
Accetta tutti i tipi di cavi OEM e 3300 / 33C.
Soddisfa / supera tutti gli standard applicabili.

REF	LATERAL NEGRO	SIDE BLACK	LATERALE NERO
TXCHX8550P	Interlock Hombre al agua	Interlock Stoper, hang rope assy	Interlock Stacco aut. d'emergencia
TXCHX8552P	Interlock Hombre al agua Trim/Tilt	Interlock Trim/Tilt switch Stoper, hang rope assy	Interlock Trim/Tilt switch Stacco aut. d'emergencia
TXCHX8553P	Interlock	Interlock	Interlock
TXCHX8555P	Interlock Trim/Tilt	Interlock Trim/Tilt switch	Interlock Trim/Tilt switch

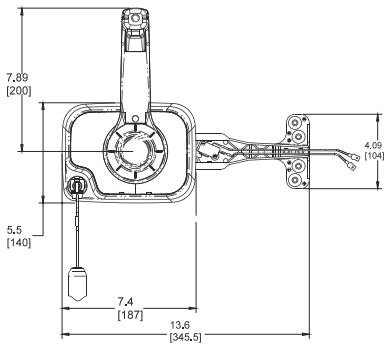



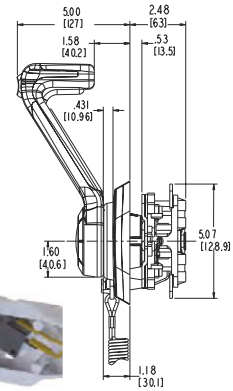



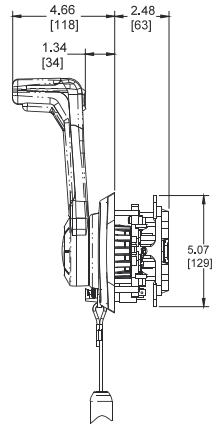

REF	LATERAL CENTRAL NEGRO	SIDE CENTER BLACK	LATERALE CENTRALE NERO
TXCHX8850P	Interlock Hombre al agua	Interlock Stoper, hang rope assy	Interlock Stacco aut. d'emergencia
TXCHX8852P	Interlock Hombre al agua Trim/Tilt	Interlock Stoper, hang rope assy Trim/Tilt switch	Interlock Stacco aut. d'emergencia Trim/Tilt switch

REF	CONSOLA NEGRO	CONSOLE BLACK	CONSOLLE NERO
TXCHX8640P	Estándar	Standard	Standard
TXCHX8642P	Trim/Tilt	Trim/Tilt switch	Trim/Tilt switch

REF	CONSOLA CROMADO	CONSOLE CHROME	CONSOLLE CROMATO
TXCHX8650P	Interlock	Interlock	Interlock
TXCHX8652P	Interlock Trim/Tilt	Interlock Trim/Tilt switch	Interlock Trim/Tilt switch





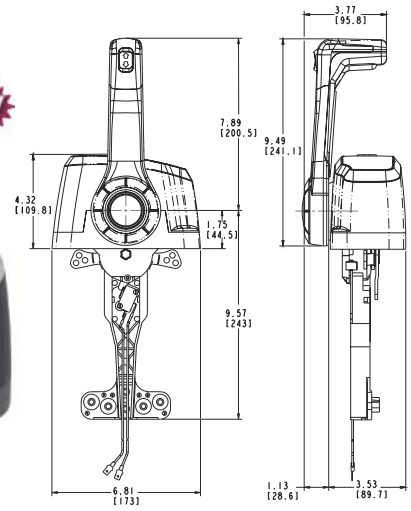

REF	CONSOLA DOBLE NEGRO	DOUBLE CONSOLE BLACK	CONSOLLE DOPPIO NERO
TXCHX8740P	Estándar	Standard	Standard
TXCHX8742P	Trim/Tilt	Trim/Tilt switch	Trim/Tilt switch

REF	CONSOLA DOBLE CROMADO	DOUBLE CONSOLE CHROME	CONSOLLE DOPPIO CROMATO
TXCHX8240P	Estándar	Standard	Standard
TXCHX8242P	Trim/Tilt	Trim/Tilt switch	Trim/Tilt switch

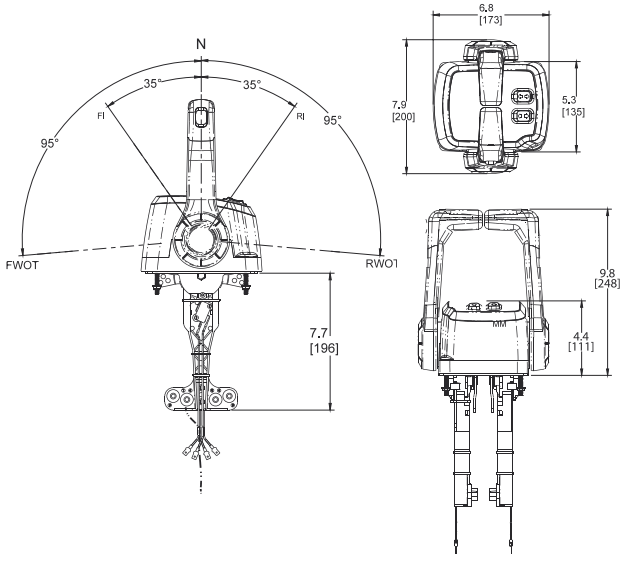



NEW



GAMA TELEFLEX «SL3»

Mando a distancia de palanca con doble función (acelerador y cambio). Para instalación de 1 ó 2 motores. Carcasa de plástico anticorrosión. Protección de arranque en punto muerto. Botón aceleración en punto muerto. Utiliza 2 ó 4 cables 3300C, 3300S OMC o Mercury.
Dual function, single lever control, for virtually all stern drive, outboard and inboard engines.Push button for neutral engine warm-up. Neutral interlock prevents starting in gear. For cable 3300C, 3300S, OMC or Mercury.
Comando a distanza di leve con doppia funzione acceleratore e cambio. Per installazione di un motore. Scatola di plastica anticorrosione. Protezione di partenza in punto morto. Pulsante accellerazione in punto morto. Utilizza 2 o 4 cavi 3300C, 3300S OMC o Mercury.

MANDO SL3
SL3 CONTROL
COMANDO SL3

REF	TRIM
MOR309476	
MOR309478-002	✔

SEASTAR SOLUTIONS

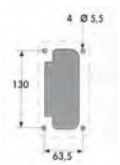

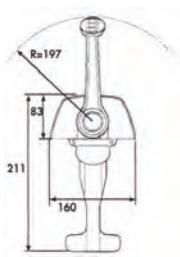



MANDO SL3-TWIN
SL3 CONTROL
COMANDO SL3-TWIN

REF	TRIM
MOR309479	
MOR309481	✔

SEASTAR SOLUTIONS

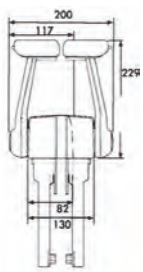

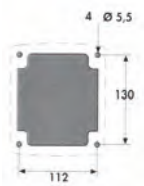



MANDO SL3-LATERAL
SL3 CONTROL
COMANDO SL3-LATERALE

REF	TRIM
MOR309473	
MOR309475-002	✔

SEASTAR SOLUTIONS

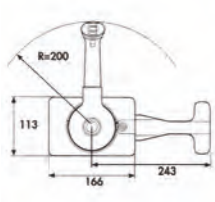

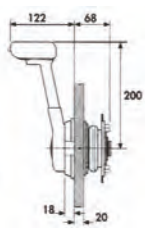



GAMA TELEFLEX «PREMIUM»

Mando a distancia de palanca con doble función (acelerador y cambio). Para instalación de 2 motores. Carcasa de plástico CROMADO. Protección de arranque en punto muerto. Botón aceleración en punto muerto. Utiliza 2 cables 3300C, 3300S, OMC o Mercury. Diseño ergonómico.
Dual function, single lever control, for virtually all stern drive, outboard and inboard engines.Push button for neutral engine warm-up. Neutral interlock prevents starting in gear. For cable 3300C, 3300S, OMC or Mercury. Ergonomic desing.
Comando a distanza di leve con doppia funzione accelleratore e cambio. Per installazione di 2 motori. Scatola di plastica CROMATA. Protezione di partenza in punto morto. Pulsante accellerazione in punto morto. Utiliza 2 cables 3300C, 3300S, OMC o Mercury. Diseño ergonómico.

MANDO CH7500
CH7500 CONTROL
COMANDO CH7500

REF	TRIM
MORCH7500	
MORCH7500TT	✔

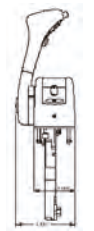
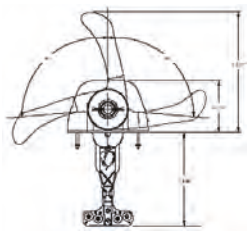


MANDO CH7800
CH7800 CONTROL
COMANDO CH7800

REF	TRIM
MORCH7840	
MORCH7842	✔

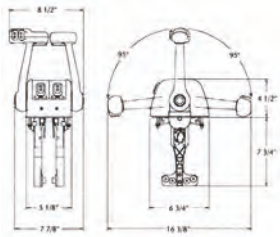


MANDO CH1700
CH1700 CONTROL
COMANDO CH1700

REF	TRIM
MORCH1700	
MORCH1700TT	✔

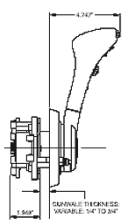
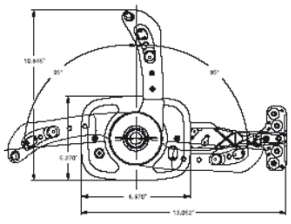


MANDO LATERAL
SIDE CONTROL
COMANDO LATERALE

REF	R.O. OEM	MODELOS MODELS MODELLI	TIEMPOS STROKE TEMPI	AÑOS YEAR ANNO
REC703-48230-14	703-48230-10 703-48230-11 703-48230-12 703-48230-13 703-48230-14 703-48230-15 703-48230-16 703-48230-17 703-48230-18 703-48230-1A 703-48230-20 703-48230-21	9.9 - 70 HP	2	1986+

Conector de 7 pins. Sin PowerTrim
Mando a distancia de palanca con doble función (acelerador y cambio). Para motores fueraborda Yamaha y Parsun de 9,9 Electric a 30 Hp. Montaje lateral superpuesto. Leva para aceleración en punto muerto. Utiliza cables 33-C
Connector 7 pins. Without PowerTrim
Dual function, single lever control. For outboard engines Yamaha and Parsun 9,9 Electric to 30 Hp. Lever for neutral engine warm-up. For 33-C cables
Conettore da 7 pins. Sin PowerTrim
Comando a distanza di leve con doppia funzione accelleratore e cambio. Per motori fuoribordo Yamaha e Parsun da 9,9 Electric a 30 Hp. Montaggio laterale sovrapposto. Leva per accellerare in un punto morto. Utilizza cavi 33-C.



REF	R.O. OEM	MODELOS MODELS MODELLI	TIEMPOS STROKE TEMPI	AÑOS YEAR ANNO
REC703-48205-16	703-48205-10 703-48205-11 703-48205-12 703-48205-13 703-48205-14 703-48205-15 703-48205-16 703-48205-17 703-48205-18 703-48205-1A 703-48205-1B 703-48205-20 703-48205-21	8 - 300 HP	2 & 4	1984+

Conector de 10 pins. Sin PowerTrim
Mando a distancia de palanca con doble función (acelerador y cambio). Para motores fueraborda Yamaha y Parsun de 40 a 250 Hp. Montaje lateral superpuesto. Leva para aceleración en punto muerto. Con interruptor y cableado de Power Trim. Utiliza cables 33-C
Connector 10 pins. Without PowerTrim
Dual function, single lever control, For outboard engines Yamaha and Parsun 40 to 250 Hp. Lever for neutral engine warm-up. With power trim switch and wires. For 33-C cables.
Conettore da 10 pins. Sin PowerTrim
Comando a distanza di leva con doppia funzione, accelleratore e cambio. Per motori fuoribordo Yamaha e Parsun da 40 a 250 Hp. Montaggio laterale sovrapposto. Leva per accellerare in un punto morto. Con interruttore e cablaggio di Power Trim. Utilizza cavi 33-C.



DIFERENCIAL DOBLE PUENTE
DUAL STATION TRANSFER UNIT
DIFFERENZIALE DOPPIO

Diferencial para doble mando. Utiliza cables tipo 33-C. Conecta los cables de dos mandos de modo que el motor pueda ser accionado independientemente desde los dos mandos.
Uses cables type 33-C. Connects the cables of two stations to one engine. 1 unit for throttle, 1 unit for clutch.
Differenziale per comando doppio. Utilizza cavi tipo 33-C. Connette i cavi comando in modo che il motore possa essere azionato independentemente dai comandi.

REF
GS40010

GOLDENSHIP



MANDO DE CONTROL
UNIVERSAL CONTROL
COMANDO DI CONTROLLO

REF	
GS40001	114 x 228 mm

GOLDENSHIP



Fabricado en plástico Hostafon y palancas de aluminio anodizado, independientes para acelerador y cambio. Con kit de adaptadores para cables Morse 33C, OMC, Mercury, Mariner y Suzuki.
Manufactured in Hostafon with levers in light alloy aluminum. Can be installed in both sides. With adaptors for Morse 33C, OMC, Mercury, Mariner and Suzuki.
Prodotto in plastica Hostafon e leve in alluminio anodizzato, indipendente per acceleratore e cambio. Con kit di adattatori per cavi Morse 33C, OMC, Mercury, Mariner e Suzuki.

REF
GS40015

GOLDENSHIP

Mando a distancia de palanca con doble función (acelerador y cambio). Para motores intraborda e intra-fueraborda. Montaje lateral superpuesto. Utiliza cables 33-C.
Dual function, single lever control, For virtually all stern drive, outboard and inboard engines. Push button for neutral engine warm-up. For 33-C cables.
Comando a distanza di leve con doppia funzione accelleratore e cambio. Per motori entrobordo e entro-fuoribordo. Montaggio laterale sovrapposto. Utilizza cavi 33-C.

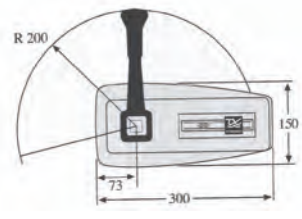



CABLES MANDOS
CONTROL CABLES
CAVI COMANDO

CABLE CONTROL KM MAXFLEX
ENGINE CONTROL CABLES
CAVI CONTROLLO KM MAXFLEX

Mercury, Mercruiser y Mariner.

maxflex PRETECH

REF	
PREKM63706	6'/ 1,80 m
PREKM63707	7'/ 2,10 m
PREKM63708	8'/ 2,45 m
PREKM63709	9'/ 2,75 m
PREKM63710	10'/ 3,05 m
PREKM63711	11'/ 3,35 m
PREKM63712	12'/ 3,65 m
PREKM63713	13'/ 3,95 m
PREKM63714	14'/ 4,25 m
PREKM63715	15'/ 4,60 m
PREKM63716	16'/ 4,90 m
PREKM63717	17'/ 5,20 m
PREKM63718	18'/ 5,50 m
PREKM63719	19'/ 5,80 m
PREKM63720	20'/ 6,10 m
PREKM63721	21'/ 6,40 m
PREKM63722	22'/ 6,70 m
PREKM63723	23'/ 7,00 m
PREKM63724	24'/ 7,30 m



CABLE CONTROL GEN II MAXFLEX
ENGINE CONTROL CABLES
CAVI CONTROLLO GEN II MAXFLEX

Mercury 4000 / 4500 GEN II PLATINUM

maxflex PRETECH

REF	
PRE53006	6'/ 1,80 m
PRE53007	7'/ 2,10 m
PRE53008	8'/ 2,45 m
PRE53009	9'/ 2,75 m
PRE53010	10'/ 3,05 m
PRE53011	11'/ 3,35 m
PRE53012	12'/ 3,65 m
PRE53013	13'/ 3,95 m
PRE53014	14'/ 4,25 m
PRE53015	15'/ 4,60 m
PRE53016	16'/ 4,90 m
PRE53017	17'/ 5,20 m
PRE53018	18'/ 5,50 m
PRE53019	19'/ 5,80 m
PRE53020	20'/ 6,10 m
PRE53021	21'/ 6,40 m
PRE53022	22'/ 6,70 m
PRE53023	23'/ 7,00 m
PRE53024	24'/ 7,30 m



CABLE CONTROL MC MAXFLEX
ENGINE CONTROL CABLES
CAVI CONTROLLO MC MAXFLEX

OMC, Johnson y Evinrude desde (1979+)

maxflex PRETECH

REF	
PREMC30506	6'/ 1,80 m
PREMC30507	7'/ 2,10 m
PREMC30508	8'/ 2,45 m
PREMC30509	9'/ 2,75 m
PREMC30510	10'/ 3,05 m
PREMC30511	11'/ 3,35 m
PREMC30512	12'/ 3,65 m
PREMC30513	13'/ 3,95 m
PREMC30514	14'/ 4,25 m
PREMC30515	15'/ 4,60 m
PREMC30516	16'/ 4,90 m
PREMC30517	17'/ 5,20 m
PREMC30518	18'/ 5,50 m
PREMC30519	19'/ 5,80 m
PREMC30520	20'/ 6,10 m
PREMC30521	21'/ 6,40 m
PREMC30522	22'/ 6,70 m
PREMC30523	23'/ 7,00 m
PREMC30524	24'/ 7,30 m



CABLE CONTROL 3300S
ENGINE CONTROL CABLES
CAVI CONTROLLO 3300S

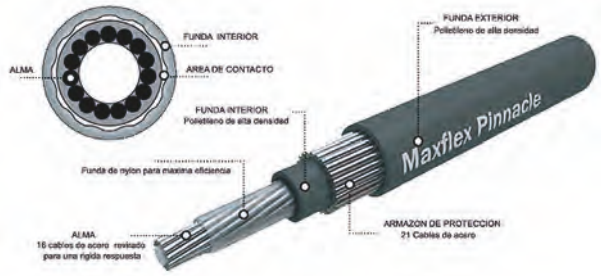

Cables de mando. **Con doble funda para mejor eficiencia de trabajo**
Recorrido de trabajo: 76 mm Rosca 10-32"
Engine control cables. Double coating for maximum efficiency. Travel 3". Threaded 10-32.
Cavi di comando. Con doppia copertura per una miglor efficienza di lavoro. Escursione di lavoro: 76 mm. Passo 10-32".

REF	
PRE6300S05	5' / 1,50 m
PRE6300S06	6' / 1,80 m
PRE6300S07	7' / 2,10 m
PRE6300S08	8' / 2,45 m
PRE6300S09	9' / 2,75 m
PRE6300S10	10' / 3,05 m
PRE6300S11	11' / 3,35 m
PRE6300S12	12' / 3,65 m
PRE6300S13	13' / 3,95 m
PRE6300S14	14' / 4,25 m
PRE6300S15	15' / 4,60 m
PRE6300S16	16' / 4,90 m
PRE6300S17	17' / 5,20 m
PRE6300S18	18' / 5,50 m
PRE6300S19	19' / 5,80 m
PRE6300S20	20' / 6,10 m
PRE6300S21	21' / 6,40 m
PRE6300S22	22' / 6,70 m
PRE6300S23	23' / 7,00 m
PRE6300S24	24' / 7,30 m
PRE6300S25	25' / 7,60 m
PRE6300S26	26' / 7,90 m
PRE6300S27	27' / 8,25 m
PRE6300S28	28' / 8,55 m
PRE6300S29	29' / 8,85 m
PRE6300S30	30' / 9,15 m
PRE6300S31	31' / 9,50 m
PRE6300S32	32' / 9,75 m
PRE6300S33	33' / 10,00 m
PRE6300S34	34' / 10,35 m
PRE6300S35	35' / 10,65 m
PRE6300S36	36' / 11,00 m
PRE6300S38	38' / 11,50 m
PRE6300S40	40' / 12,10 m
PRE6300S42	42' / 12,70 m
PRE6300S44	44' / 13,30 m
PRE6300S46	46' / 14,00 m
PRE6300S48	48' / 14,50 m
PRE6300S50	50' / 15,00 m

maxflex
PINNACLE

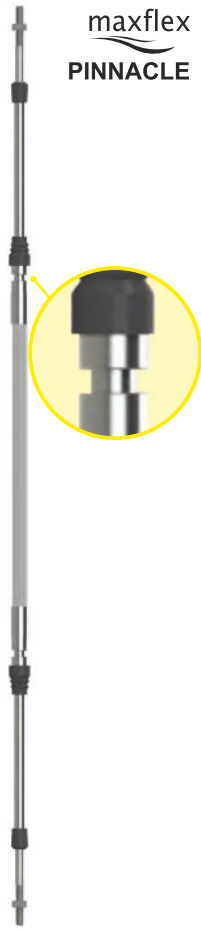

CABLE CONTROL 3300C
ENGINE CONTROL CABLES
CAVI CONTROLLO 3300C

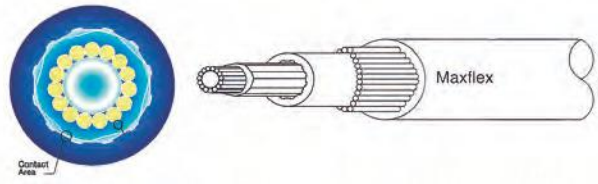

Cables de mando. Recorrido de trabajo: 76 mm Rosca 10-32"
Engine control cables. Travel 3" . Threaded 10-32.
Cavo di comando. Escursione di lavoro: 76 mm. Passo 10-32'

REF	
PRE3300C05	5' / 1,50 m
PRE3300C06	6' / 1,80 m
PRE3300C07	7' / 2,10 m
PRE3300C08	8' / 2,45 m
PRE3300C09	9' / 2,75 m
PRE3300C10	10' / 3,05 m
PRE3300C11	11' / 3,35 m
PRE3300C12	12' / 3,65 m
PRE3300C13	13' / 3,95 m
PRE3300C14	14' / 4,25 m
PRE3300C15	15' / 4,60 m
PRE3300C16	16' / 4,90 m
PRE3300C17	17' / 5,20 m
PRE3300C18	18' / 5,50 m
PRE3300C19	19' / 5,80 m
PRE3300C20	20' / 6,10 m
PRE3300C21	21' / 6,40 m
PRE3300C22	22' / 6,70 m
PRE3300C23	23' / 7,00 m
PRE3300C24	24' / 7,30 m
PRE3300C25	25' / 7,60 m
PRE3300C26	26' / 7,90 m
PRE3300C27	27' / 8,25 m
PRE3300C28	28' / 8,55 m
PRE3300C29	29' / 8,85 m
PRE3300C30	30' / 9,15 m
PRE3300C31	31' / 9,50 m
PRE3300C32	32' / 9,75 m
PRE3300C33	33' / 10,00 m
PRE3300C34	34' / 10,35 m
PRE3300C35	35' / 10,65 m
PRE3300C36	36' / 11,00 m
PRE3300C38	38' / 11,50 m
PRE3300C40	40' / 12,10 m
PRE3300C42	42' / 12,70 m
PRE3300C44	44' / 13,30 m
PRE3300C46	46' / 14,00 m
PRE3300C48	48' / 14,50 m
PRE3300C50	50' / 15,00 m



CABLE CONTROL 4300C
ENGINE CONTROL CABLES
CAVI CONTROLLO 4300C

REF	
PRE6500C05	5' / 1,50 m
PRE6500C06	6' / 1,80 m
PRE6500C07	7' / 2,10 m
PRE6500C08	8' / 2,45 m
PRE6500C09	9' / 2,75 m
PRE6500C10	10' / 3,05 m
PRE6500C12	12' / 3,65 m
PRE6500C14	14' / 4,25 m
PRE6500C16	16' / 4,90 m
PRE6500C18	18' / 5,50 m
PRE6500C19	19' / 5,80 m
PRE6500C21	21' / 6,40 m
PRE6500C23	23' / 7,00 m
PRE6500C25	25' / 7,60 m
PRE6500C27	27' / 8,25 m

REF	
PRE6500C29	29' / 8,85 m
PRE6500C31	31' / 9,50 m
PRE6500C33	33' / 10,00 m
PRE6500C35	35' / 10,65 m
PRE6500C37	37' / 11,28 m
PRE6500C39	39' / 11,89 m
PRE6500C41	41' / 12,56 m
PRE6500C43	43' / 13,11 m
PRE6500C45	45' / 13,71 m
PRE6500C47	47' / 14,33 m

maxflex
PINNACLE



Cables de mando. **Para trabajos pesados.** Recorrido de trabajo: 76 mm Rosca 1/4-28"
Engine control cables. **Heavy Duty.** Travel 3". Threaded 1/4-28.
Cavi di comando. **Per lavori pesanti.** Escursione di lavoro: 76 mm. Passo 1/4-28"

CABLE DE STOP MAXFLEX
UTILITY CABLES
CAVI DI STOP MAXFLEX

REF	
PRE31507	7'/ 2,10 m
PRE31508	8'/ 2,45 m
PRE31509	9'/ 2,75 m
PRE31510	10'/ 3,05 m
PRE31511	11'/ 3,35 m
PRE31512	12'/ 3,65 m
PRE31513	13'/ 3,95 m
PRE31514	14'/ 4,25 m
PRE31515	15'/ 4,60 m
PRE31516	16'/ 4,90 m



ACCESORIOS CABLES
CABLES ACCESSORIES
ACCESSORI CAVI

KIT ADAPTADORES DE CABLES 3300C
ADAPTER KIT
KIT ADATTATORI DI CAVI 3300C

REF		
PRE30190	Fueraborda MERCURY Outboard MERCURY Fuoribordo MERCURY	1



REF		
PRE30172	Fueraborda JOHNSON / EVINRUDE Outboard JOHNSON / EVINRUDE Fuoribordo JOHNSON / EVINRUDE	1



REF		
PRE30107	Para mandos MERCURY / MERCRUISER For engine control MERCURY / MERCRUISER Per comandi MERCURY / MERCRUISER	1



REF		
PRE30493	Para mandos OMC For engine control OMC Per comandi OMC	1



REF		
PRE30055	Para colas OMC For sterndrive OMC Per piedi OMC	1



REF		
PRE30212	MERCRUISER	1



ACCESORIOS CABLES 3300C
ACCESSORIES FOR CABLES
ACCESSORI PER CAVI 3300C

REF				
PRE331125	Horquilla	Fork	Forcella	1
PRE31799	Rótula	Ball joint	Snodo	1
PRE308650	Pivote	Pivot	Perno	1
PRE332010	Abrazadera	Clamp	Ferma cavo	1
PRE331538	Platina	Shim	Piastrina	1
PRE331980	Terminal ojo	Terminale eye	Terminale cavo	1
PRE336174	Fijador 1 cable	Stop collar	Fissatore 1 cavo	1
PRE215154	Fijador 2 cable	Stop collar	Fissatore2 cavi	1
PRE31916	Tirador SD para cable de paro y otros usos	SD control Handle for throttle, choke, stop, etc.	Tirante SD Tirante per cavi e altri usi	1
PRE31917	Soporte angular para tirador SD	Mounting bracket for SD control	Supporto per tirante SD	1



PRE331538

PRE308650

PRE331980

PRE332010

PRE336174

PRE215154

PRE31916

PRE31917

PRE331125

PRE31799

DIRECCIONES
STEERING CONTROLS
TIMONERIE

CAJA DIRECCION AJUSTABLE «ZTS»
TILT STEERING HELM «ZTS»
TIMONERIA REGOLABILE «ZTS»

Con mecanismo antiretorno.
Elimina el «feedback» de la hélice.
Nº vueltas babor-estribor: 3,8.
Para utilizar con cables **3000 SS.**
Reemplaza **Teleflex-Morse® NFB Safe-T II, NFB 4.2, T73BRFC**

Zero torque steering rotary helm.
Eliminates prop feedback load.
Precise response of 3.8 turns lock-to-lock.
For use with the steering cables **3000 SS.**
Replaces **Teleflex-Morse® NFB Safe-T II, NFB 4.2, T73BRFC**

Timoneria con meccanismo anti-ritorno.
Elimina il feedback delle eliche.
N° giri destra e sinistra: 3,8.
Da utilizzare con cavi: 3000 SS.
Rimpiazza **Teleflex-Morse®NFB Safe-T II, NFB 4.2, T73BRFC**

REF			
PRE500010	Caja de dirección	Helm	Timoneria
PRE500012	Ménsula de montaje 90º	Bezel kit 90º	Coprimozzo 90°
PRE500014	Ménsula de montaje 20º	Bezel kit 20º	Coprimozzo 20°

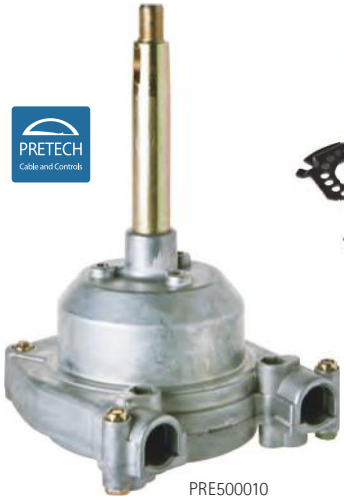
PRE500010

PRE500012

PRE500014

Caja de dirección con sistema de ángulo ajustable hasta 40º.
Se acomoda la postura de conducción más idónea para el piloto.

Tilt rotary steering system to use with the steering cables 3000 SS.
With full 40 degree range of motion.

Timoneria con sistema di angolo fino a 40°.
Si può impostare la posizione più idonea di guida per il pilota.

REF	
PRE500007	ZTS
PRE370987	3000


PRE500007
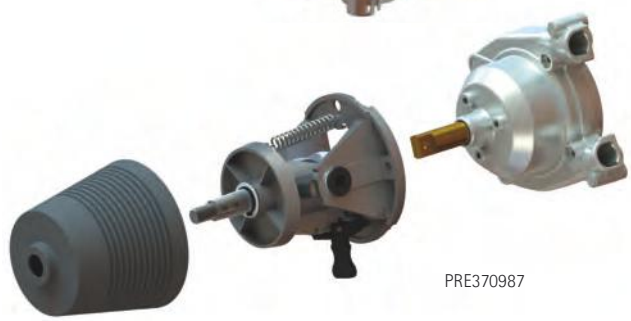
PRE370987

KIT DE DIRECCION «LT»
STEERING SYSTEM «LT»
KIT TIMONERIA «LT»

Compuesto por 1 caja operadora, 1 cable de dirección según las medidas indicadas y un bisel de montaje de 90º.
Para embarcaciones de **hasta 5,5 m, fueraborda** de hasta **55 hp**.
Radio mínimo curvatura del cable 360º.
Carrera del cable 230 mm con 2,5 vueltas de volante

Rotary steering system: Helm, Steering cable and 90º bezel.
Can be used on boats up to **18 ft** in length with engines up to **55 hp**
2,5 turns lock to lock.
Travel 230 mm.

Composto da una timoneria, 1 cavo timoneria secondo le dimensioni indicate e una piastra da 90°.
Per imbarcazioni fino a **5,5m, fuoribordo** fino a **55hp.**
Raggio minimo curvatura del cavo 360°.
Corsa cavo 230mm con 2,5 giri del volante.

REF	
PRE208005	5'/ 1,50 m
PRE208006	6'/ 1,80 m
PRE208007	7'/ 2,10 m
PRE208008	8'/ 2,45 m
PRE208009	9'/ 2,75 m
PRE208010	10'/ 3,05 m

REF	
PRE208011	11'/ 3,35 m
PRE208012	12'/ 3,65 m
PRE208013	13'/ 3,95 m
PRE208014	14'/ 4,25 m
PRE208015	15'/ 4,60 m
PRE208016	16'/ 4,90 m

steerflex

PRETECH Cable and Controls



KIT DE DIRECCIÓN 3000 SS
S.S. STEERING SYSTEM 3000SS
KIT TIMONERIA 3000 SS

Compuesto por 1 caja operadora, 1 cable de dirección fabricado en acero inox según medidas indicadas y un bisel de montaje de 90º.
Para embarcaciones de **hasta 8 m** con un esfuerzo máximo de 140 kg en el punto de unión.
Puede montarse en cualquier posición con movimientos de 90º.
Radio mínimo curvatura del cable 200 mm.
Carrera del cable 230 mm con 3,6 vueltas de volante
Reemplaza Teleflex-Morse® Safe-T QC, Safe-T, Uflex T71FC

Rotary steering system: Helm, Stainless Steel Cable and 90º Bezel.
Can be used on boats up to **25 ft** in length.
Stainless steel inner cable with spring stainless steel enclosure coil.
Maximun working load: 300 lb at the tiller arm.
Three turns lock to lock.
Travel 230 mm.
Replaces Teleflex-Morse® Safe-T QC, Safe-T, Uflex T71FC

Composto da una timoneria, 1 cavo timoneria in acciaio inox, secondo le misure richieste e una piastra di montaggio di 90°.
Per imbarcazioni fino a **8m** con uno sforzo massimo di 140kg nel punto di unione.
Si può montare in qualunque posizione con un movimento di 90°.
Raggio minimo curvatura 200mm.
Corsa del cavo 230mm con 3,6 giri del volante.
Rimpiazza **Teleflex-Morse® Safe-T QC, Safe-T, Uflex T71FC**

REF	
PRE315008	8' / 2,45 m
PRE315009	9' / 2,75 m
PRE315010	10' / 3,05 m
PRE315011	11' / 3,35 m
PRE315012	12' / 3,65 m
PRE315013	13' / 3,95 m
PRE315014	14' / 4,25 m

REF	
PRE315015	15' / 4,60 m
PRE315016	16' / 4,90 m
PRE315017	17' / 5,20 m
PRE315018	18' / 5,50 m
PRE315019	19' / 5,80 m
PRE315020	20' / 6,10 m

steerflex

PRETECH Cable and Controls



CABLE MANDOS 3000 SS INOX
STEERING CABLE 3000 SS
CAVO TIMONERIA 3000 SS ACCIAIO INOX

REF	
PRE550008	8'/ 2,45 m
PRE550009	9'/ 2,75 m
PRE550010	10'/ 3,05 m
PRE550011	11'/ 3,35 m
PRE550012	12'/ 3,65 m
PRE550013	13'/ 3,95 m
PRE550014	14'/ 4,25 m
PRE550015	15'/ 4,60 m
PRE550016	16'/ 4,90 m
PRE550017	17' / 5,20 m

REF	
PRE550018	18' / 5,50 m
PRE550019	19' / 5,80 m
PRE550020	20' / 6,10 m
PRE550021	21' / 6,40 m
PRE550022	22' / 6,70 m
PRE550023	23' / 7,00 m
PRE550024	24' / 7,30 m
PRE550025	25' / 7,60 m
PRE550026	26' / 7,90 m

steerflex

PRETECH Cable and Controls



CABLE DE DIRECCION «LT»
STEERING CABLE «LT»
CAVO DI TIMONERIA «LT»

REF	
PRE250005	5'/ 1,50 m
PRE250006	6'/ 1,80 m
PRE250007	7'/ 2,10 m
PRE250008	8'/ 2,45 m
PRE250009	9'/ 2,75 m
PRE250010	10'/ 3,05 m

REF	
PRE250011	11'/ 3,35 m
PRE250012	12'/ 3,65 m
PRE250013	13'/ 3,95 m
PRE250014	14'/ 4,25 m
PRE250015	15'/ 4,60 m
PRE250016	16'/ 4,90 m

PRETECH Cable and Controls



CABLE DE DIRECCION «MEGA-UR»
STEERING CABLE «MEGA UR»
CAVO DI TIMONERIA «MEGA UR»

Reemplaza Ultraflex T71FC, T72FC, T73NR FC, T81FC, T82FC, T83NR FC. Teleflex Safe-T QC, NFB 4.2, NFB Safe-T II

Replace Ultraflex and Teleflex cables.

Rimpiazzano i cavi Ultraflex e i cavi Teleflex.

REF	
PRE509007	7'/ 2,14 m
PRE509008	8'/ 2,45 m
PRE509009	9'/ 2,75 m
PRE509010	10'/ 3,05 m
PRE509011	11'/ 3,35 m
PRE509012	12'/ 3,65 m
PRE509013	13'/ 3,95 m

REF	
PRE509014	14'/ 4,25 m
PRE509015	15'/ 4,60 m
PRE509016	16'/ 4,90 m
PRE509017	17' / 5,20 m
PRE509018	18' / 5,50 m
PRE509019	19' / 5,80 m
PRE509020	20' / 6,10 m

steerflex

PRETECH Cable and Controls



SOPORTE DE POPA
BRACKET KIT
SUPPORTO DI POPPA

Soporte para cable de dirección.
Para montaje en el espejo de popa.

Bracket kit for inboard transom steering mount.

Supporto per cavi timoneria.
Per il montaggio nello specchio di poppa.

REF	
PRE370046	1

PRETECH Cable and Controls



SOPORTE ESTANCO
SPLASHWELL KIT
FLANGIA SNODATA

Soporte para cable de dirección.
Para montaje estanco en los laterales de la embarcación.
Regulable.

Bracket kit for inboard side splashwell steering mount.

Suppporto per cavi timoneria.
Montaggio della flangia ai lati dell'imbarcazione.
Regolabile.

REF	
PRE370613	1

PRETECH Cable and Controls



RÓTULA DE UNIÓN
BALL JOINT
SNODO DI UNIONE

Rótula para unión rápida del cable de dirección al motor.

Ball joint for steering cables.

Giunto per unire i cavi timoneria al motore.

REF	
PRE370619	1

PRETECH Cable and Controls



CARDÁN DE UNIÓN
SWIVEL JOINT
CARDANO DI UNIONE

Del cable de dirección al motor.

Swivel joint for steering cables.

Per unire cavi timoneria al motore.

REF	
PRE370618	1

PRETECH Cable and Controls



DIRECCIÓN HIDRÁULICA FUERABORDA
HYDRAULIC STEERING SYSTEM
TIMONERIE IDRAULICA FUORIBORDO

KIT PARA FUERABORDAS 150 HP
KIT FOR OUTBOARDS 150 HP
KIT PER FUORIBORDI 150 HP

Para embarcaciones con motor de **hasta 150 HP.**
Bomba de aluminio, con válvula antiretorno incorporada.
Cilindro de aluminio y acero inoxidable, con purgadores.
Se suministra completa con racors, tubo flexible de rilsan y 2L de aceite hidráulico

For boats with engines **up to 150 HP**.
Helm pump made in aluminum, with non-return valve incorporated.
Cylinder in aluminum and stainless steel, with breather valves.
Completed with racors, rilsan tubing and 2L hydraulic oil.

Per imbarcazioni con motori fino a 150HP.
Corpo pompa in alluminio, con valvola anti-ritorno incorporata.
Cilindo in alluminio e acciaio inox, con spurgo.
Si vende completa di raccordi, tubo flessibile e 2 l di olio idraulico.

			TX4200K
Modelo bomba	Pump model	Modello pompa	BayStar
Capacidad bomba	helm volume	Cap. Pompa	23 cm^3
Modelo cilindro	Cylinder model	Mod. Cilindro	HC4645H
Capacidad cilindro	Cylinder volume	Cap. Cilindro	105 cm^3
Carrera del pistón	Cylinder travel	Corsa pistone	206 mm
Nº vueltas babor-estribor	Turns lock to lock	N° giri a destra e sinistra	5
Manguera con racors	Hose with racors	Tubo con raccordo	2 x 6 m
Velocidad máxima	Max. speed	Velocità max	50 kn

BayStar



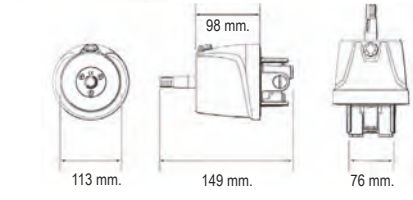

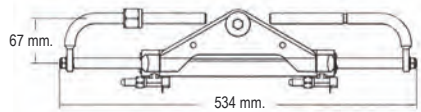

KIT PARA FUERABORDAS 300 HP
KIT FOR OUTBOARDS 300 HP
KIT PER FUORIBORDI 300 HP

Para embarcaciones con motor de **hasta 300 HP.** Bomba de aluminio, con válvula antiretorno incorporada. Cilindro de aluminio y acero inoxidable, con purgadores. Se suministra completa con racors, tubo flexible de rilsan y 2L de aceite hidráulico

For boats with engines **up to 300 HP.** Helm pump made in aluminum, with non-return valve incorporated. Cylinder in aluminum and stainless steel, with breather valves. Completed with racors, rilsan tubing and 2L hydraulic oil.

Per imbarcazioni con motori fino a 300 HP. Corpo pompa in alluminio, con valvola anti-ritorno incorporata. Cilindro in alluminio e acciaio inox, con spurgo. Si vende completa di raccordi, tubro flessibile e 2 l di olio idraulico.

			TX6400K
Modelo bomba	Pump model	Modello pompa	SeaStar
Capacidad bomba	helm volume	Cap. Pompa	27,8 cm^3
Modelo cilindro	Cylinder model	Mod. Cilindro	HC5345H
Capacidad cilindro	Cylinder volume	Cap.Cilindro	139 cm^3
Carrera del pistón	Cylinder travel	Corsa pistone	206 mm
Nº vueltas babor-estribor	Turns lock to lock	N° giri destra e sinistra	5
Manguera con racors	Hose with racors	Tubo con raccordo	2 x 7 m
Velocidad máxima	Max. speed	Velocità max	65 kn



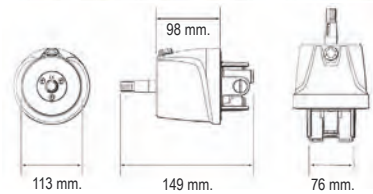



TUBOS HIDRÁULICOS PARA **TX6400K**
HYDRAULIC HOSES FOR **TX6400K**
TUBI IDRAULICI PER TX6400K

REF		
TXMP5126	26' / 8 m	2



DIRECCIÓN HIDRÁULICA PARA INTRABORDA
INBOARD HYDRAULIC STEERING SYSTEM
TIMONERIA IDRAULICA PER ENTROBORDO

			GS41055	GS41057	GS41061	GS41058
Embarcaciones de	Boats from	Imbarcazioni da	5 - 7 m	6 - 10 m	7 - 12 m	8 - 13 m
Denominación	Model	Modello	GE-30	GE-50	GE-75	GE-100
Potencia empuje	Rudder torque	Momento torcente	32 Kgm	50 Kgm	78 Kgm	100 Kgm
Modelo bomba	Pump model	Modello pompa	GM0-MRA	GM2-MRA01	GM2-MRA01	GM2-MRA03
Capacidad bomba	helm volume	Capacità pompa	17 cm^3	27 cm^3	27 cm^3	32 cm^3
Modelo cilindro	Cylinder model	Modello cilindro	CE30	CE50	CE75	CE100
Capacidad cilindro	Cylinder volume	Capacità cilindro	57 cm^3	83 cm^3	130 cm^3	164 cm^3
Carrera del pistón	Cylinder travel	Corsa del pistone	150 mm	150 mm	215 mm	215 mm
Nº vueltas babor-estribor	Turns lock to lock	N° giri destra e sinistra	3,5	3,5	4,8	5
Presión máx.	Max pressure	Pressione massima	80 bar	80 bar	80 bar	100 bar
Ø Tubo	Tube Ø	Ø Tubo	6,3 mm / 1/4"	7,94 mm / 5/16"	7,94 mm / 5/16"	7,94 mm / 5/16"
Longitud tubo	tube length	Lunghezza tubo	2 x 6 m	2 x 7,5 m	2 x 7,5 m	2 x 7,5 m

Bomba de aluminio estampado en caliente. Eje de acero inox AISI 316. Rotor a 7 pistones fabricado en acero. Cilindro de latón y acero inox. Se suministra completo con racors, tubo flexible de rilsan y 1 ó 2 L de aceite hidráulico.

Helm pump made in aluminum with hot pressing processing (not casting). Shaft made of stainless steel AISI 316. 7 pistons rotor made in steel. Cylinder in brass and stainless steel. Completed with racors, rilsan tubing and 1 or 2 L hydraulic oil.

Corpo pompa in alluminio con stampaggio a fusione. Asse in acciaio inox AISI 316. Cilindro a 7 pistoni, fabbricato in acciaio. Cilindro in ottone e acciaio inox. Si vende completo di raccordi, tubo flessibile e 1 o 2 l di olio idraulico,



DIRECCIÓN HIDRÁULICA FUERABORDA
HYDRAULIC STEERING SYSTEM
TIMONERIA IDRAULICA FUORIBORDO

Bomba de aluminio, con vávula antiretorno y sobrepresión
Cilindro de aluminio y acero inoxidable, con purgadores.
Se suministra completa con racors de latón cromado, tubo flexible de rilsan y aceite hidráulico.

Helm pump made in aluminum, with a non-return and pressure relief valves.
Cylinder in aluminum and stainless steel, with breather valves.
Completed with racors, rilsan tubing and hydraulic oil.

Corpo pompa in alluminio con valvola anti-ritorno e sovrapressione.
Cilindro in alluminio e acciaio inox, con spurgo.
Si vende completa di raccordi in ottone cromato, tubo flessibile e olio idraulico.

80 HP			GS41062
Modelo bomba	Pump model	Modello pompa	GM3-MRA
Capacidad bomba	helm volume	Cap. Pompa	14 cm^3
Modelo cilindro	Cylinder model	Mod. Cilindro	MC90B
Capacidad cilindro	Cylinder volume	Cap. Cilindro	75 cm^3
Carrera del pistón	Cylinder travel	Corsa pistone	206 mm
Nº vueltas babor-estribor	Turns lock to lock	N° giri destra e sinistrac	5,2
Manguera con racors	Hose with racors	Tubo con raccordo	2 x 5 m
Ø Tubo	Tube Ø	Ø Tubo	6,3 mm = 1/4"



150 HP			GS41065
Modelo bomba	Pump model	Modello pompa	GM0-MRA
Capacidad bomba	helm volume	Cap. Pompa	17 cm^3
Modelo cilindro	Cylinder model	Mod. Cllindro	MC150BR
Capacidad cilindro	Cylinder volume	Cap. cilindro	83 cm^3
Carrera del pistón	Cylinder travel	Corsa pistone	200 mm
Nº vueltas babor-estribor	Turns lock to lock	N° giri destra e sinistra	4,9
Manguera con racors	Hose with racors	Tubo con raccordo	2 x 6 m
Ø Tubo	Tube Ø	Ø Tubo	6,3 mm = 1/4"



300 HP			GS41066
Modelo bomba	Pump model	Modello pompa	GM2-MRA01
Capacidad bomba	helm volume	Cap. Pompa	27 cm^3
Modelo cilindro	Cylinder model	Mod. Cilindro	MC300A
Capacidad cilindro	Cylinder volume	Cap. Cilindro	130 cm^3
Carrera del pistón	Cylinder travel	Corsa pistone	198 mm
Nº vueltas babor-estribor	Turns lock to lock	N° giri destra e sinistra	4,9
Manguera con racors	Hose with racors	Tubo con raccordo	2 x 7 m
Ø Tubo	Tube Ø	Ø Tubo	7,94 mm = 5/16"



350 HP			GS41059
Modelo bomba	Pump model	Modello pompa	GM2-MRA01
Capacidad bomba	helm volume	Cap. Pompa	27 cm^3
Modelo cilindro	Cylinder model	Mod. Cllindro	MC350A
Capacidad cilindro	Cylinder volume	Cap. Cilindro	140 cm^3
Carrera del pistón	Cylinder travel	Corsa pistone	198 mm
Nº vueltas babor-estribor	Turns lock to lock	N° giri destra e sinistra	5,2
Manguera con racors	Hose with racors	Tubo con raccordo	2 x 7,5 m
Ø Tubo	Tube Ø	Ø Tubo	7,94 mm = 5/16"



KIT DIRECCIÓN HIDRÁULICA PARA COLAS
STERN-DRIVE HYDRAULIC STEERING SYSTEM
KIT TIMONERIA IDRAULICA PER PIEDI

Bomba de aluminio estampado en caliente.
Eje de acero inox AISI 316.
Rotor a 7 pistones fabricado en acero.
Cilindro de aluminio y acero inox.
Se suministra completa con racors, 2 x 7,5 m tubo flexible de rilsan y 2 L de aceite hidráulico.

Helm pump made in aluminum with hot pressing processing (not casting).
Shaft made of stainless steel AISI 316.
7 pistons rotor made in steel.
Cylinder in aluminum and stainless steel, with breather valves.
Completed with racors, rilsan tubing and 2 L hydraulic oil.

Corpo pompa in alluminio con stampaggio a fusione.
Asse in acciaio inox AISI316.
Cilindro a 7 pistoni fabbricato in acciaio.
Cilindro in alluminio e acciaio inox.
Si vende completo di raccordi, 2x7,5 m di tubo flessibile e 2 l di olio idraulico.

SERVO-ASISTIDA	POWER ASSISTED		GS41053
Denominación	Model	Modello	GF150ET
Modelo bomba	Pump model	Modello pompa	GM2-MRA01
Capacidad bomba	helm volume	Cap. pompa	27 cm^3
Modelo cilindro	Cylinder model	Mod. cilindro	MC150
Capacidad cilindro	Cylinder volume	Cap. pompa	88cm^3
Carrera del pistón	Cylinder travel	Corsa pistone	200 mm
Peso bomba	Helm weight	Peso pompa	3 kg
Nº vueltas babor-estribor	Turns lock to lock	N° giri destra e sinistra	3,4
Ø Tubo	Tube Ø	Ø Tubo	7,94 mm / 5/16"
Longitud tubo	Tube length	Lungh. tubo	2 x 7,5 m

SIN SERVO	NON POWER ASSISTED		GS41054
Denominación	Model	Modello	GF300BET
Modelo bomba	Pump model	Modello pompa	GM2-MRA03
Capacidad bomba	helm volume	Cap. pompa	32 cm^3
Modelo cilindro	Cylinder model	Mod. cilindro	MC300BET
Capacidad cilindro	Cylinder volume	Cap. cilindro	146 cm^3
Carrera del pistón	Cylinder travel	Corsa pistone	200 mm
Peso bomba	Helm weight	Peso pompa	3,7 kg
Nº vueltas babor-estribor	Turns lock to lock	N° giri destra e sinistra	4,6
Ø Tubo	Tube Ø	Ø Tubo	7,94 mm / 5/16"
Longitud tubo	Tube length	Lungh. tubo	2 x 7,5 m





BARRA DE DIRECCIÓN
LINK ARM
BARRA DI DIREZIONE

Barra de reenvío para conexión de los cables de dirección.
Fabricada en acero inox.

Link arm for outboards steerings.
Stainless steel.

Barra di rinvio per la connessione dei cavi timoneria.
Fabbricata in accaio inox.

REF			
GS41080	Johnson/Evinrude	320 - 340 mm	1

GOLDENSHIP



Barra de reenvío para conexión de los cables de dirección.
Fabricada en acero inox.
Con conexión rápida.

Link arm for outboards steerings.
Stainless steel.
Adjustable.
Quick connection.

Barra di rinvio per la connessione dei cavi timoneria.
Fabbricata in acciaio inox.
Con connessione rapida.

REF		
GS41082	330 - 370 mm	1

GOLDENSHIP



BARRA DE UNIÓN
UNIVERSAL TIE BAR
BARRA DI UNIONE

Barra de unión para el acople de dos motores fueraborda hasta 300 HP.
Fabricada en acero inox. AISI 316.
Con conexión a rótula.

Universal tie bar for two engines up to 300 HP.
Made in stainless steel . AISI 316.
With spherical joint.

Barra di accoppiamento per due motori fuoribordo fino a 300HP.
In acciaio Inox AISI316, con snofo sferico.

REF		
GS41084	640 - 780 mm	1

GOLDENSHIP



BARRA DE UNIÓN
Barra de unión para el acople de dos motores

UNIVERSAL TIE BAR
Universal tie bar for two engines

BARRA DI UNIONE
Barra di unione per accoppiamento di due motori.

REF		
GS41083	850 mm	1

MAVI MARE



CONECTORES
CONNECTORS
PIASTRA CONNESSIONE

REF		
GS41068	Yamaha 40-50-60-70 HP Honda 115-130 HP	1

GOLDENSHIP



REF		
GS41069	Mercury Optimax 115 Mercury 150 EFI	1

GOLDENSHIP



REF		
GS41067	Honda 115-130	1

GOLDENSHIP



CILINDRO
CYLINDER
CILINDRO

MAVI MARE

REF	R.O. OEM R.O.
GS41077	MC350HD
GS41060	MC90B
GS41063	MC150BR
GS41089	MC300A



BOMBA
PUMP
POMPA

REF	R.O. OEM R.O.
GS41070	GM3-MRA
GS41071	GM0-MRA
GS41072	GM2-MRA01
GS41073	GM2-MRA03



ACEITE DIRECCIÓN HIDRÁULICA
OIL FOR HYDRAULIC STEERING SYSTEM
OLIO PER TIMONERIA IDRAULICA

REF	
GS41074	1 L



ACCESORIOS
ACCESORIES
ACCESSORI

PROTECTOR DE HÉLICES
PROP GUARDS
PROTETTORI ELICHE

RECmar®

Ref.	Para motores For engines Per motori	Ø interior Interior Ø Ø interior	
REC5-9.8	5 - 9 hp	9"	
REC9.9-20	9,9 - 20 hp	9"	
REC25-35	25 - 35 hp	11"	
REC40-65	40 - 65 hp	13"	
REC70-100	70 - 100 hp	14"	
REC110-230	110 - 230 hp	16"	



NOTA: Todos los motores «Big Foot» y de arrastre requieren la medida superior.
Velocidad Máxima: 30 nudos

NOTE: All hp's with «Big Foot» and High Thrust applications require next size up.
Max. Speed: 30 knots

NOTA: Tutti i motori «Big Foot» a alta spinta richiedono la refe-renza superiore.
Velocità Massima: 30 nodi

Protectores para hélices en fuerabordas y colas intra-fueraborda, mejorando el control direccional y aumentando la eficiencia de la hélice. Fabricado en polipropileno de alto impacto.
Propeller guard for outboards and stern drive units. Manufactured in high impact polypropylene. Better control in directional force. Increase the propeller efficiency.
Protettore per eliche nei fuoribordo e piedi entro-fuoribordo, migliorando il controllo direzionale e aumentando l'efficenza delle eliche. Prodotto in polipropilene di alta qualità.

ANTI-ROBO
ANTI THEFT
ANTI-FURTO

Para motores fueraborda. Fabricado en acero inox. de 3 mm con candado de latón con 2 llaves.
Manufactured in 3 mm stainless steel pipe. Provided with a padlock in brass with 2 keys.
Per motori fuoribordo. Prodotto in acciaio inox da 3 mm con luchetto in ottone con 2 chiavi.

Ref.	
GS73138	240 mm
GS73139	320 mm

GOLDENSHIP



ARNÉS FUERABORDA
HOISTING HARNESS
IMBRAGATURA FUORIBORDO

Confeccionado con cincha sintética.
Una sola medida se ajusta para fuerabordas de 2 a 15 HP.
Outboard hoisting harness. One size works on virtually all 2 to 15 HP outboards.
Confezionato con cinghia sintetica. Una sola misura, si regola per i fuoribordo da 2 a 15 HP.



Ref.
GS73069

GOLDENSHIP



FUNDAS PARA FUERABORDA
OUTBOARD COVERS
COPERTURA FUORIBORDO

Ref.	Motores / engines / Motori	Dimensiones / Dimensions / Dimensione A	B	C
OCEMA0741	5 hp	32 cm	27 cm	50 cm
OCEMA0742	15 - 30 hp	40 cm	30 cm	56 cm
OCEMA0743	30 - 60 hp	49 cm	36 cm	62 cm
OCEMA0744	60 - 100 hp	53 cm	40 cm	68 cm
OCEMA0745	100 - 150 hp	58 cm	46 cm	74 cm
OCEMA0746	175 - 250 hp	60 cm	50 cm	82 cm

Para motores fueraborda de 2 y 4 tiempos. Confeccionadas en tejido de poliéster de 320 g/m^2. Impermeabilizado, transpirable. Costuras reforzadas. Color gris claro.
For outboard engines 2 & 4 stoke. Manufactured in 320 gsm polyester canvas. Weather proof, breathable. Reinforzed top stitched seams. Grey color.
Per motori fuoribordo di 2 e 4 tempi. Confezionato in tessuto di poliestere da 320 g/m^2. Impermeabile, traspirante. Cuciture rinforzate. Colore grigio chiaro.

OCEANSOUTH

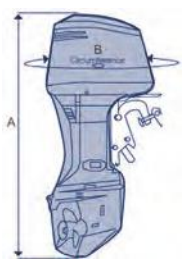



FUNDAS PARA F.B. COMPLETA
FULL OUTBOARD COVERS
COPERTURA COMPLETA F.B.

Ref.	Motores / engines / Motori	Dimensiones / Dimensions / Dimensione A	B
OCEMA0751	> 6 hp	98 cm	126 cm
OCEMA0752	8 - 15 hp	110 cm	140 cm
OCEMA0753	15 - 20 hp	125 cm	150 cm
OCEMA0754	20 - 30 hp	137 cm	165 cm
OCEMA0755	30 - 60 hp	144 cm	180 cm
OCEMA0756	60 - 100 hp	170 cm	200 cm
OCEMA0757	115 - 150 hp	190 cm	226 cm
OCEMA0758	175 - 250 hp	197 cm	248 cm

Para motores fueraborda de 2 y 4 tiempos. Confeccionadas en tejido de poliéster de 320 g/m^2. Impermeabilizado, transpirable. Costuras reforzadas. Color gris claro.
For outboard engines 2 & 4 stoke. Manufactured in 320 gsm polyester canvas. Weather proof, breathable. Reinforzed top stitched seams. Grey color.
Per motori fuoribordo di 2 e 4 tempi. Confezionato in tessuto di poliestere da 320 g/m^2. Impermeabile, traspirante. Cuciture rinforzate. Colore grigio chiaro.

OCEANSOUTH

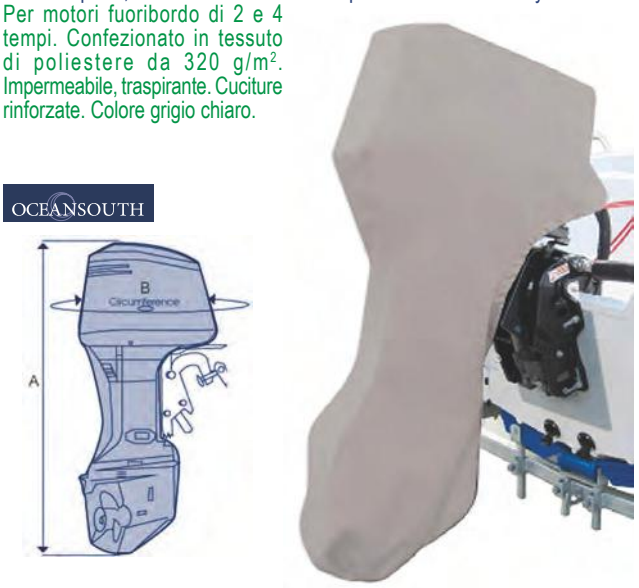

ÍNDICE

SISTEMA ALIMENTACIÓN Y FILTRACIÓN	PÁG
BOMBAS DE ACEITE	124
BOMBAS DE COMBUSTIBLES MANUALES	64
BOMBAS DE COMBUSTIBLE ELÉCTRICAS Y MECÁNICAS	**161**
• GUÍA BOMBAS ELÉCTRICAS	163
• JUNTAS BOMBA	165
• JUNTAS VST	163
• KITS BOMBA	165
• MEMBRANAS	164
CABLES ACELERADOR	161
CARBURADORES COMPLETOS	**156**
• BOYAS	160
• GUÍA KITS CARBURADOR	159
• KITS AGUJAS	159
• KITS CARBURADOR	156
CONECTORES	65
FILTROS ACEITE	68
FILTROS AIRE	68
MANGUERAS COMBUSTIBLE	64
FILTROS DE COMBUSTIBLE	**65**
• BRACKETS	65
• RACORDS	67
GUÍA BOMBAS GASOLINA	167
PASAMAMPAROS	65

SISTEMA ELÉCTRICO	PÁG
ALTERNADORES	80
INTERRUPTORES	90
MOTORES DE ARRANQUE	74
MOTORES DE TRIM Y POWER TRIM	79
MÓDULOS Y LIMITADORES	89
REGULADORES Y RECTIFICADORES	80
SENSORES	89
SOLENOIDES Y RELÉS	**77**
• GUÍA DE RELÉS	78

SISTEMA DE ENCENDIDO	PÁG
BOBINAS	87
BUJIAS	92
CABLES PARA BUJÍA	95
CAJAS NEGRAS	83
GUÍA DE CAJAS NEGRAS, STARTOR, TRIGGER, REGULADOR	85
LLAVES DE ARRANQUE	90
MUELLES DE ARRANQUE	74
PLATINOS Y CONDENSADORES	91
STATORS	81
TRIGGERS	82

SISTEMA DE REFRIGERACIÓN	PÁG
BOMBA DE AGUA	
• ACOPLE INOX	214
• KITS REPARACIÓN BOMBA AGUA	211
• CUERPOS BOMBA DE AGUA	213
• KITS CUERPOS BOMPA AGUA	214
• GUIA BOMBAS DE AGUA	218
• TAPA	214
• BASES Y KITS	215
• JUNTAS	216
• KITS RETENES	226
• GUÍA KITS RETENES COLA	228
• GUÍA KITS RETENES ACEITE	229
IMPULSORES	217
TERMOSTATOS	**174**
• CUERPO	175
• KITS	175
• JUNTAS	175
• COMPONENTES CUERPO	177
• GUÍA TERMOSTATOS	175

PARTES DE MOTOR	PÁG
CIGÜEÑAL	132
• GUÍA DE CIGÜEÑAL	133
• GUÍA DE COJINETES, RETES Y AROS TÓRICOS	133
COJINETES	126
CORREAS	69
DESPIECE DE MOTOR	96
GUÍA AROS PARA PISTONES	130
GUÍA DE BIELAS, CIGÜEÑAL Y PISTÓN	127
GUÍA DE COJINETES	131
GUÍA DE PISTONES	128
GUÍA RETENES ACEITE	145
JUNTA ADMISIÓN	149
JUNTA BASE MOTOR	146
JUNTA COLECTOR	153
JUNTA CULATA Y KITS	**136**
• GUÍA JUNTAS DE CULATA	142
JUNTA CULATÍN	152
JUNTA ESCAPE	153
JUNTA TAPA REFRIGERACIÓN	148
PISTONES, AROS, RODAMIENTOS Y BULONES	124
RETENES CULATA	145

COLAS Y COMPONENTES	PÁG
ÁNODOS	69
COLAS	179
COMPONENES DE COLA	230
DESPIECE COLAS	182
GUÍA KITS PIÑONES	206
GUÍA PIÑONES	206
EJES HÉLICE	210
HÉLICES Y GUIA DE APLICACIÓN	238
SELECTORES	**208**
• GUÍA DE SELECTORES	208
SILENBLOCKS	95
HERRAMIENTAS	180
GUÍA DE MANTENIMIENTO	**233**

ÍNDICE REF-->R.O.	**242**
ÍNDICE R.O.-->REF	**251**

TABLE OF CONTENTS

FUEL & FILTRATION SYSTEM	PÁG
OIL PUMP	124
PRIMER BULB MANUAL	64
ELECTRIC & MANUAL FUEL PUMP	**161**
• ELECTRIC FUEL PUMP GUIDE	163
• GASKET PUMP	165
• VST GASKET	163
• KITS PUMP	165
• DIAPHRAGMS	164
THROTLE CABLE	161
CARBURATOR	**156**
• FLOATS	160
• CARBURATOR SET GUIDE	159
• NEEDLE VALVE SETS	159
• KITS CARBURATOR	156
CONNETORS	65
FUEL LINE	64
OIL FILTERS	68
AIR FILTERS	68
FUEL FILTERS	65
• BRACKETS	65
• RACORDS	67
FUEL PUMP GUIDE	167
THRU HULL	65

ELECTRIC SYSTEM	PÁG
ALTERNATOR	80
CUT OFF SWITCHES	90
STARTER	74
TRIM & POWER TRIM	79
MODULES & LIMITATORS	89
REGULATOR & RECTIFIERS	80
SENDERS	89
SOLENOID & RELAYS	77
• RELAY GUIDE	78

IGNITION SYSTEM	PÁG
COILS	87
SPARK PLUGS	92
SPARK PLUGS WIRES	95
POWER PACKS	83
POWER PACKS, STARTOR, TRIGGER, REGULATOR GUIDE	85
IGNITION STARTER SWITCH	90
REWIND SPRING	74
POINTS & CONDENSERS	91
STATORS	81
TRIGGERS	82

COOLING SYSTEM	PÁG
WATER PUMP	
• PUMP CAPS	214
• WATER PUMP SERVICE KITS	211
• WATER PUMP HOUSING	213
• WATER PUMP HOUSING KITS	214
• WATER PUMP GUIDE	218
• WATER PUMP PLATE	214
• WATER PUMP BASE ASSEMBLY & KITS	215
• GASKETS	216
• SEAL KIT APPLICATIONS	226
• GEARCASE SEAL KITS APPLICATIONS	228
• OIL SEAL APPLICATIONS	229

IMPELLERS 217
THERMOSTAT 174
• HOUSING 175
• KITS 175
• GASKETS 175
• HOUSING COMPONENTS 177
• THERMOSTAT GUIDE 175

ENGINE PARTS PÁG
CRANKSHAFT 132
• CRANKSHAFT GUIDE 133
• BEARINGS, OIL SEAL & O-RING GUIDE 133
BEARING 126
BELTS 69
ENGINE PARTS 96
STANDARD PISTON RINGS 130
CONNECTING ROAD, CRANKSHAFT & PISTON GUIDE 127
BEARING CUIDE 131
PISTON GUIDE 128
OIL SEAL GUIDE 145
INTAKE GASKET 149
GASKET CYLINDER 146
OIL PAN GUIDE 153
GASKET CYLINDER HEAD & KITS 136
• GASKET CYLINDER HEAD GUIDE 142
GASKET HEAD COVER 152
EXHAUST GASKET 153
GASKET, EXHAUST INNER COVER 148
PISTONS, RINGS, PINS & BEARING 124
GASKET CYLINDER SEALS 145

UNIT DRIVES & COMPONENTS PÁG
ANODES 69
GEARCASE 179
GEARHOUSING COMPONENTS 230
GEARCASE COMPONENTS 182
GEAR SETS 206
PINIONS APPLICATIONS 206
PROP SHAFT 210
PROPELLERS & GUIDE 238
CLUTCH DOGS 208
• CLUTCH DOGS APPLICATIONS 208
SILENBLOCKS 95
TOOLS 180
MANTENANCE GUIDE 233

REF-->OEM 241
OEM-->REF 251

INDICE

SISTEMA ALIMENTAZIONE E FILTRAZIONE PÁG
POMPE OLIO 124
POMPE COMBUSTIBILE 64
POMPE COMBUSTIBILE ELETTRICA E MANUALE 161
• GUIDA POMPA DE BENZINE ELETTRICA 163
• GUARNIZIONE POMPA 165
• GUARNIZIONE VST 163
• KITS POMPA 165
• MEMBRANA 164
CAVO ACCELLERATORE 161
CARBURATORE COMPLETO 156
• GALLEGGIANTI 160
• GUIDA KITS CARBURATORE 159
• KITS SPILLO CONICO 159
•·KITS CARBURATORE 156
ATTACCO 65
TUBO BENZINA 68
FILTRI OLIO 68
FILTRI ARIA 64
FILTRI BENZINA 65
• SUPPORTO 65
• RACORDO 67
GUIDA POMPA BENZINA 167
PASSASCAFO 65

SISTEMA ELETRICO PÁG
ALTERNATORE 80
INTERRUTORI 90
MOTORINI AVVIAMENTO 74
MOTORINI TRIM E POWER TRIM 79
MODULI E LIMITATORI 89
REGOLATORI E RADDRIZZATORI 80
SENSORE 89
SOLENOIDI E RELE 77
• GUIDA DE RELE 78

SISTEMA DI ACCENSIONE PÁG
BOBINE 87
CANDELE 92
CAVO PER CANDELE 95
CENTRALINE 83
GUIDA DE CENTRALINE, STARTOR, TRIGGER, REGULATORE 85
CHIAVE DI AVVIAMENTO 90
MOLLE AVVIAMENTO 74
PUNTINE E CONDENSATORE 91
STATORS 81
TRIGGERS 82

SISTEMA DI REFREDDAMENTO PÁG
POMPA ACQUA
• CAPUCCIO INOX 214
• KITS RICAMBI POMPA ACQUA 211
• CORPO POMPA ACQUA 213
• KITS CORPO POMPA ACQUA 214
• GUIDA POMPA ACQUA 218
• PIASTRA 214
• BASE POMPA ACQUA E KIT 215
• GUARNIZIONE 216
• GUIDA KIT TENUTA 226
• GUIDA KIT TENUTA PIEDE 228
• GUIDA KIT PARAOLIO 229
GIRANTI 217
TERMOSTATI 174
• CORPO 175
• KIT 175
• GUARNIZIONE 175
• COMPONENTI CORPO 177
• GUIDA TERMOSTATO 175

PARTI DEL MOTORE PÁG
ALBERO MOTORE 132
• GUIDA ALBERO MOTORE 133
• GUIDA CUSCINETTO, TENUTE E FASCE 133
CUSCINETTO 126
CINGHIE 69
PARTI DEL MOTORE 96
GUIDA FASCE PER PISTONI 130
GUIDA BIELLE, ALBERO MOTORE E PISTONE 127
GUIDA CUSCINETTO 131
GUIDA PISTONE 128
GUIDA PARAOLIO 145
GUARNIZIONE ASPIRAZIONE 149
GUARNIZIONE BASE MOTORE 146
GUARNIZIONE COLLETTORE 153
GUARNIZIONE TESTATA E KIT 136
• GUIDA GUARNIZIONE TESTATA 142
GUARNIZIONE COPERCHIO TESTA 152
GUARNIZIONE SCARICO 153
GUARNIZIONE COPERCHIO REFREDAMENTO 148
PISTONE, FASCE, CUSCINETTI E BULLONI 124
PARAOLIO COPERCHIO TESTATA 145

PIEDI E COMPONENTI PÁG
ANODI 69
PIEDI 179
COMPONENTI DI PIEDI 230
PARTI PIEDI 182
GUIDA CUSCINETTO 206
GUIDA KIT CUSCINETTO 206
ASSE ELICHE 210
ELICHE E GUIDA APPLICAZIONE 238
SELETTORI 208
• GUIDA SELETTORI 208
SILENBLOCKS 95
ATTREZZI 180
GUIDA MANUTENZIONE 233

INDICE REF-->R.O. 242
INDICE R.O.-->REF 251

CONECTORES COMBUSTIBLE
FUEL FITTINGS
ATTACCHI BENZINA

BOMBA DE COMBUSTIBLE
PRIMER BULB
POMPA BENZINA

Ref.	Manguera Hose Tubo	Envase Pack Qnt
GS31090	5/16"	1 x blister
GS31095	3/8"	1 x blister
GS31187	1/4"	1 x blister
CEF500621	8 mm	1 x bolsa / bag / borsa

GOLDENSHIP



Universal / Universal / Universale

cef



CEF500621

Fabricada con elastómeros termoplásticos inyectados, resistentes al alcohol y rayos UV.
Premium quality bulb resistence to alcohol as well as UV and ozone.
Fabbricata con elastomero termoplastico, resistente ai solventi e ai raggi UV.

Ref.	R.O. OEM	Manguera Hose Tubo	Envase (x blister) Pack (x blister) Qnt (x blister)
SIE18-8004	Mercury/Mariner 98396A38	5/16"	1
	Johnson/Evinrude 174511		
SIE18-8005	Mercury/Mariner 98396A38	3/8"	1
	Johnson/Evinrude 174511		



UNIVERSAL
Fabricada con elastómeros termoplásticos inyectados, resistentes al alcohol y rayos UV.
UNIVERSAL Premium quality bulb resistence to alcohol as well as UV and ozone.
UNIVERSALE
Fabbricata con elastomero termoplastico, resistente ai solventi e raggi UV.

Ref.	R.O.
REC858763	858763

MOTORES / ENGINES / MOTORI
30 HP - 90 HP

NEW



LÍNEA DE COMBUSTIBLE
FUEL LINE ASSEMBLY
TUBO CARBURANTE

Ref.	R.O. OEM	Manguera Hose Tubo	Envase (x bolsa) Pack (x bag) Qnt (x borsa)
GS31189		3/8"	1

GOLDENSHIP



Bomba GS31188.
Con 2 m de manguera resistente al alcohol.
Primer GS31188. With 2 m alcohol resistant hose.
Pompa GS31188 con 2 m di tubo resistente ai solventi.

Ref.	R.O. OEM	Manguera Hose Tubo	Envase (x bolsa) Pack (x bag) Qnt (x borsa)
GS31097		3/8"	1
GS31099		8 mm	1
SIE18-8013		5/16"	1
SIE18-8015		3/8"	1
CEF500600		8 mm	1

Universal. Con 2 m de manguera resistente al alcohol.
Universal. With 2 m alcohol resistant hose.
Universale con 2 m di tubo resistente ai solventi.

GOLDENSHIP
MADE IN THE USA
GS31097



GOLDENSHIP
GS31099



MADE IN THE USA
SIE18-8013, SIE18-8015



cef
CEF500600



MANGUERA DE COMBUSTIBLE
FUEL HOSE
TUBO BENZINA

Ref.	Ø Int	Largo Lengh Long	Envase Pack Qn
TRI305-0566	5/16" = 7,92 mm	15 m	Caja / Box / Cassa
TRI305-0386	3/8" = 9,53 mm	15 m.	Caja / Box / Cassa

MADE IN THE USA
CE CERTIFIED



TRIDENT

Manguera Trident para líneas de combustible. Con refuerzo termoplástico que le permite excelente flexibilidad y resistencia a los rayos UV. Color gris. Resistente al alcohol. **Especialmente indicado para motores fueraborda.** Cumple las normas: SAEJ1527, ISO-8469 Tipo B1 y Certificación CE. Garantía: 3 años.
Marine fuel hose (distribution and vent) **for outboards.** Fuel resistant thermo-plastic formulation with 2 spiral reinforcement provides excelent bendability and resistance to UV, aging and permeation by all marine fuels (gasoline/petrol and diesel) including alcohol blends.
Meets or exceeds: SAEJ1527, ISO-8469 Tipo B1 & Certification CE.
Warranty: 3 years.
Tubo Trident per linea combustibile. Con rinforzo termoplastico che gli permette un'eccellente flessibilità e resistenza ai raggi UV. Colore grigio. Resistente ai solventi. **Indicato per i motori fuoribordo.**
Conforme alla norma: SAEJ1527, ISO-8469 Tipo B1 e Certificazione CE.
Garanzia: 3 anni.

PASAMAMPAROS
THRU HULL
PASSASCAFO

Ref.	R.O. OEM	Manguera Hose Tubo	Envase (x blister) Pack (x blister) Qnt (x blister)
GS31064		3/8"	1



Para atravesar mamparos de hasta 12 mm. Fabricado en latón.
For bulkhead up to 12 mm. Made in machined brass.
Per attraversare paratie fino a 12 mm. Fabbricato in ottone.

CONECTORES
CONNECTOR
ATTACCO

Ref.	Rosca Thread Passo	Envase (x blister) Pack (x skinpack) Qnt (x Blister)
GS31068	1/4" NPT	1

CODO DEPOSITO
Fabricado en latón.
TANK ELBOW
Made in machined brass.
GOMITO SERBATOIO
Fabbricato in ottone.



Ref.	Rosca Thread Passo	Envase (x blister) Pack (x skinpack) Qnt (x Blister)
GS31069	1/4" NPT	1

CONECTOR T "
Para conectar dos motores a un sólo depósito, o viceversa. Fabricado en latón.
CONNECTOR T "
To connect two motors to a single deposit, or vice versa. Made in machined brass.
CONNETTORE T "
Per collegare due motori ad un solo serbatoio, o viceversa. Fabbricato in ottone.



CONECTOR COMBUSTIBLE
FUEL CONNECTOR
ATTACCO COMBUSTIBLE

Ref.	R.O. OEM	Manguera Hose Tubo	Envase (x blister) Pack (x blister) Qnt (x blister)
GS31026	22-142131	1/4"	1
GS31027	22-13563T-3	5/16"	1
GS31028	22-13563T-3	3/8"	1



Ref.	R.O. OEM	Manguera Hose Tubo	Envase (x blister) Pack (x blister) Qnt (x blister)
GS31082	22-13563T 7	3/8"	1

Modelos Nuevos. 4HP hasta V6, (1998+)
New Models. 4HP to V6 (1998+)
Nuovi Modelli. Dal 4HP al V6 (1998+)



Ref.	R.O. OEM	Manguera Hose Tubo	Envase (x blister) Pack (x blister) Qnt (x blister)
GS31078	22831T03	3/8"	1
GS31079	30185T3	5/16"	1
GS31080	30185T3	3/8"	1



GS31078



GS31079-GS31080

TOMA TANQUE COMBUSTIBLE
FUEL TANKS CONNECTOR
FILETTATURA PER SERBATOIO BENZINA

Ref.	Rosca Thread Passo			Envase (x blister) Pack (x skinpack) Qnt (x Blister)
GS31022	1/4" NPT	Mod. Standard	Vertical / Verticale	1
GS31023	1/4" NPT	Mod. New	Vertical / Verticale	1
GS31025	1/4" NPT			1
GS31081	1/4" NPT	Mod. New		1

Fabricado en latón.
Made in machined brass.
Fabbricato in ottone.



GS31022-GS31023



GS31025-GS31081

FILTROS COMBUSTIBLE Y ELEMENTOS
FUEL FILTERS AND ELEMENTS
SUPPORTI, FILTRI BENZINA E RACCORDI

BRACKET / BRACKET / SUPPORTO

Ref.	Braket Bracket Supporto	Tomas NTPF Ports Filetto
REC25000	Aluminio / Aluminium / Alluminio	1/4 "
REC25010	INOX AISI316 / S.S. AISI316	1/4"
REC25020	Aluminio / Aluminium / Alluminio	3/8 "
REC25030	INOX AISI316 / S.S. AISI316	3/8"
RECOBBRACKET	Plástico / Plastic / Plastica	1/4 "

Con 2 tapones de bronce y 2 tubos de extensión.
(2 entradas y 2 salidas).
With 2 brass plugs and 2 extension tubes.
(2 inputs & 2 outputs).
Con 2 tappi di bronzo e 2 tubi di estensione.
(2 ingressi entrata carburante e 2 uscite carburante).





REC25000 - REC25020



REC25010 - REC25030



RECOBBRACKET

FILTRO COMBUSTIBLE SEPARADOR DE AGUA
WATER SEPARATING FUEL FILTER
FILTRO SEPARATORE ACQUA-BENZINA

RACOR

Ref.	Micras Micron Micron	Altura Height Altezza
REC24942	10	4-7/16"
REC35-802893Q01	10	3-3/4"
REC855686	28	4-7/16"
REC35-802893Q	25	3-3/4"
RACPFF5510	10	4-7/16"



RACPFF5510

RECmar



REC24942



REC35-802893Q01



REC855686



REC35-802893Q

FILTRO ORIGINAL
OEM FILTER
FILTRO BENZINA ORIGINALE

Ref.	Micras Micron Micron	Altura Height Altezza
RM35-802893Q	10	3-3/4"



Ref.	R.O.
REC35-18458Q4	35-18458Q4

MOTORES / ENGINES / MOTORI
V-135 DFI 2.5L (2001-03)
V-150 DFI/EFI 2.5L (2000-10)
V-175 DFI/EFI 2.5L (2000-03)
V-200/200 EFI 2.5/3.0L (2000-10)
225 DEFI/EFI 3.0L (1998-09)
250 EFI 3.0L (1998-09)
200-210-250 HP Jet Drive (2001-10)
200-225-300 HP Mercury Racing (2001-05)



FILTRO CON BRACKET
OEM FILTER WITH BRACKET
FILTRO BENZINA CON SUPPORTO

Ref.	Micras Micron Micron	Tomas NPTF Ports Filetto	Flujo Flow Flusso
REC24950	25	1/4"	50 GPH
REC24952	10	1/4"	50 GPH



Bracket de Aluminio. Con 2 tapones de bronce y 1 tubo de extensión.
Cast Aluminium Bracket. With 2 brass plugs & 1 extension tube.
Supporto in alluminio. Con 2 tappi di bronzo e 1 tubo di estensione.

FILTRO DECANTADOR COMBUSTIBLE CON VASO TRANSPARENTE
COMPLETE FUEL FILTER WITH TRANSPARENT BOWL
FILTRO DI DECANTAZIONE BENZINA COMPLETO CON VASCHETTA TRASPARENTE

Filtro Bracket Aluminio Alluminum bracket filter Filtro con Bracket in alluminio	Filtro Bracket Plástico Plastic Bracket filter Filtro con Bracket in plastica	Elemento Element Cartuccia
RAC320R-RAC-01	RAC320R-RAC-03	RACS3213
		LENS3213



Incluye soporte
Includes bracket
Con supporto



LENS3213



RACS3213

Filtro completo Complet filter Filtro completo	Cartucho recambio Replacement element Cartuccia di ricambio	Capacidad Máx. Max. Capacity Capacità massima
REC90794-46866	REC90794-46868	117l/h

RECmar



LLAVE PARA FILTRO
FILTER KEY
CHIAVE DA FILTRO

Ref.
RECYS-225-15



Filtro completo Complet filter Filtro completo	Cartucho recambio Replacement element Cartuccia di ricambio	Capacidad Máx. Max. Capacity Capacità massima
RECOBFILTER	RECOBELEMENT	150 l/h
	LENS3213	

RECmar





Filtro completo Complet filter Filtro completo	Micras Micron Micron	Rosca Thread Filettatura	Capacidad Máx. Max. Capacity Capacità massima
RAC490R-RAC-01	10	3/8" NPTF	340 l/h



RACOR

CON PURGADOR. Para motores fueraborda superiores a 150 HP.
WITH PRIMMING PUMP. For outboards engines more than 150 HP.
CON POMPETTA PER RIEMPIRE IL FILTRO. Per motori fuoribordo superiori a 150 hp.

Cartucho recambio
Replacement element
Cartuccia di ricambio

Ref.	R.O. / OEM
RACS3227	YMM-2E227-00
	YMM-2E227-01
LENS3227	



ADAPTADOR LÍNEA COMBUSTIBLE
FUEL LINE COUPLER
ADATTATORE LINIA COMBUSTIBILE

Ref.	R.O.
REC22-8M0001721	22-8M0001721



RACORS
RACORS
RACCORDO

Ref.	Rosca Thread Passo	Manguera Hose Tubo	Envase (x blister) Pack (x skinpack) Qnt (x blister)
GS31065	1/4" NPT	3/8" = 9.5 mm	2
GS31166	1/4" NPT	5/16" = 7.9 mm	2
GS31155	3/8" NPT	3/8" = 9.5 mm	2
GS31156	3/8" NPT	5/16" = 7.9 mm	2
GS31157	3/8" NPT	1/4" = 6.4 mm	2

Racor 90º fabricado en latón.
Made in machined brass.
Raccordo 90° prodotto in ottone

GOLDENSHIP



Ref.	Rosca Thread Passo	Manguera Hose Tubo	Envase (x blister) Pack (x skinpack) Qnt (x blister)
GS31066	1/4" NPT	5/16" = 7.9 mm	2
GS31067	1/4" NPT	3/8" = 9.5 mm	2

Fabricado en latón.
Made in machined brass.
Prodotto in ottone



GOLDENSHIP

Ref.	R.O.
REC22-424254	22-424254

MOTORES / ENGINES / MOTORI
40- 200 HP

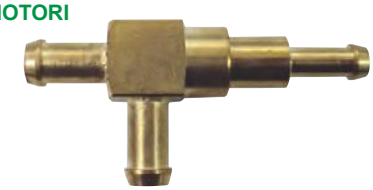

VÁLVULA
CHECK VALVE
VALVOLA

Ref.	R.O.
REC22-8189941	22-8189941

MOTORES / ENGINES / MOTORI
60 - 275 HP



FILTRO COMBUSTIBLE
FUEL FILTER
FILTRO COMBUSTIBILE

Ref.	Capacidad Capacity Capacità	Manguera Hose Tubo	Envase (x blister) Pack (x skinpack) Qnt (x blister)
GS31001	50 lt/h	6-8 mm	1 x skinpack
GS31002	150 lt/h	8-10 mm	1 x skinpack

Filtro transparente para gasolina o gasoil.
Transparent plastic in line filter for petrol and diesel.
Filtro trasparente per benzina.

GOLDENSHIP



Ref.	Manguera Hose Tubo	Envase (x blister) Pack (x skinpack) Qnt (x blister)
GS30435	6, 8, 10 mm	1

GOLDENSHIP

FILTRO TRANSPARENTE
De metal y cristal. Racors para mangueras de 6-8-10 mm.
TRANSPARENT FILTER
Clear body permits visual inspection. Racors 6-8-10 mm.
FILTRO TRASPARENTE
Di metallo e vetro. Montaggio in linea. Raccordi per tubo da 6-8-10 mm.



Ref.	Ø Manguera Ø Hose ØTubo
REC40145	1/4"
REC40155	5/16"
REC40165	3/8"
REC40135	5/16" Entrada In Entrata
	3/8" Salida Out Uscita

De plástico / Plastic / In plastica



Ref.	R.O.
REC35-80365M	646-24251-02

MOTORES / ENGINES / MOTORI
2-8 HP 2T / 2 Strokes / 2 Tempi
8-15 HP 4T / 4 Strokes / 4 Tempi



Ref.	R.O.
REC35-87946Q04	35-87946Q3, 35-87946Q04

MOTORES / ENGINES / MOTORI
6 HP - 60 HP

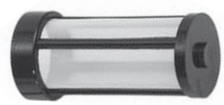

Ref.	R.O.
REC65L-24563-00	35-888289T2

MOTORES / ENGINES / MOTORI
75 HP 4T / 4 Strokes / 4 Tempi (2000+)
90 HP 4T / 4 Strokes / 4 Tempi (2000+)
115 HP EFI 4T / 4 Strokes / 4 Tempi (2001+)
225 HP EFI 4T / 4 Strokes / 4 Tempi



Ref.	R.O.
REC6C5-13915-00	35-881323001

MOTORES / ENGINES / MOTORI
75 - 100HP (EFI 4T / 4 Strokes / 4 Tempi)



Ref.	R.O.
REC35-879885T	35-879885T

MOTORES / ENGINES / MOTORI
4T / 4 Strokes / 4 Tempi
135/150/175 HP Verado (1B227000+)
200/225 HP Verado (S/P 0T980000+)
250/275/300 HP Verado (S/N 0T801000+)
30HP - 115HP EFI



Ref.	R.O.
REC1399-3938	1399-3938

MOTORES / ENGINES / MOTORI
Para carburadores
For carburators
Per carburatori
AJ, KA, KB, KC, KD, WM, WMC



Ref.	R.O.
PAF15-07080000	35-826964T

MOTORES / ENGINES / MOTORI
8K / 15K / 25K / 40K



Ref.	R.O.
REC68V-24563-00	881540

MOTORES / ENGINES / MOTORI
75/80/90 HP 4T / 4 Strokes / 4 Tempi
80/90/100/115 HP EFI 4T / 4 Strokes / 4 Tempi



Ref.	R.O.
RAC31871	35-884380T,
REC35-8M0122423	35-8M0020349
	8M0060041
	8M0122423

MOTORES / ENGINES / MOTORI
Verados
75, 90, 115 DFI 3 cyl
200 HP DFI
225 HP DFI incl. 3.0L DFI



Ref.	R.O.
PAF4-05000300	35-16248

MOTORES / ENGINES / MOTORI
4-9.8 HP 2T / 2 Strokes / 2 Tempi
4-25 HP 4T / 4 Strokes / 4 Tempi



Ref.	R.O.
REC35-877565T	35-877565T1

MOTORES / ENGINES / MOTORI
4T / 4 Strokes / 4 Tempi

25HP	(1998+)	40 Carb. 3Cyl.	(2002+)
30HP	(99-01)	50HP 4cyl.	(01-02)
30HP 3cyl.	(99-01)	60HP - 75HP	(2000+)
40HP	(98-01)	90HP 4T	(2000+)
40HP 4cyl.	(01-02)		



Ref.	R.O.
REC66K-13915-00	808504, 808504T1

MOTORES / ENGINES / MOTORI
150 - 250HP EFI
Sport Jet 240



FILTROS AIRE
AIR FILTERS
FILTRI ARIA

Ref.	R.O.
REC35-853333T	35-853333T

MOTORES / ENGINES / MOTORI
115 DFI (2000)
130 DFI (1998+)
150 DFI (1998+)
175 DFI (2001+)
200 DFI (1998-02)
225 DFI (1998-02)



Ref.	R.O.
REC35-896247	35-896247

MOTORES / ENGINES / MOTORI
135/150/175 HP Verado
NºS° (1B227000+)



Ref.	R.O.
RM35-8M0082911	35-897575T01, 35-897575T02

MOTORES / ENGINES / MOTORI
75 / 80 / 90 / 100 / 115 EFI



FILTROS ACEITE
OIL FILTERS
FILTRI OLIO

Ref.	R.O.
REC6G8-13440-00	825467T02/A1

MOTORES / ENGINES / MOTORI
9.9 HP S/N (0H00058-0H017099) (1995-98)
8 HP (BONDENSEE)
9.9 HP 232 cc



Ref.	R.O.
REC35-822626Q03	35-822626Q1, 35-822626Q03

MOTORES / ENGINES / MOTORI
8 HP (2001-04) 323cc
9.9 HP (1999-04) 323cc
13.5 HP / 15 HP (1998+) 323cc
15 HP
20 HP (2008+) 492cc
30 HP (2006+) 492cc



Ref.	R.O.
REC35-822626Q04	35-822626Q2, 35-822626Q04

MOTORES / ENGINES / MOTORI
25 HP (1998-05) 498cc
30 HP (1999-05) 747cc
40/50/60 HP (1995+)
75/90 HP Carburated (2000-05)
100/115EFI (S/N 1B366822+)



Ref.	R.O.
REC35-877761Q01	35-877761Q01, 35-877761K01

MOTORES / ENGINES / MOTORI
75/80/90/115 HP (S/N 1B366823+)
(2006+)



Ref.	R.O.
REC35-896546T	35-896546T
	35-877767K01
	35-877767Q01

MOTORES / ENGINES / MOTORI
Verado 135/150/175/200 (S/N 1B227000+)
(4 en línea / 4 in line / 4 in rete)



Ref.	R.O.
REC35-883701K01	35-883701K01, 35-877769Q01

MOTORES / ENGINES / MOTORI
Verado 200/225/250/275/300 HP
(6 en línea / 6 in line / 6 in rete)



Ref.	R.O.
REC35-822626Q15	35-822626T7, 35-822626Q15

MOTORES / ENGINES / MOTORI
225 HP EFI. (NO / NOT / NON Verado)



CORREAS
BELTS
CINGHIE

Ref.	R.O.
REC892318	57-892318, 8M0012623
	8M0026410

MOTORES / ENGINES / MOTORI

75 DFI (2005-06)
90 DFI (2005-06)
150 DFI (2004-06)



Ref.	R.O.
REC828507Q4	57-828507Q4

MOTORES / ENGINES / MOTORI

135 DFI (1998+)
150 DFI (1998+)
175 DFI (2001+)



Ref.	R.O.
REC57-880566Q14	57-880566Q14

MOTORES / ENGINES / MOTORI

135 - 400HP, VERADOS



Ref.	R.O.
REC57-828507Q01	57-828507 1

MOTORES / ENGINES / MOTORI

200 DFI (1997+)
225 DFI (1998+)



Ref.	R.O.
PAF15-07000002	57-835392Q

MOTORES / ENGINES / MOTORI

8 HP (Bodensee) 4 Tiempos / Strokes / Tempi (inter.)
9.9 HP (323 cc) 4 Tiempos / Strokes / Tempi
13.5 HP 4 Tiempos / Strokes / Tempi (inter.)
15 HP 4 Tiempos / Strokes / Tempi



Ref.	R.O.
PAF25-05000023	831294, 57-8M0065179

MOTORES / ENGINES / MOTORI

25 - 60 HP 4 Tiempos / Strokes / Tempi



Ref.	R.O.
PAF8-05000004	57-895120

MOTORES / ENGINES / MOTORI

8 HP 4 Tiempos / Strokes / Tempi (209 cc)
9.9 HP 4 Tiempos / Strokes / Tempi (209 cc)



ÁNODOS
ANODES
ANODI

Ref.	R.O.		Peso Weight Peso
CM34762	34762A1	Cinc / Zinc / Zinco	0,24 kg
CM34762A	34762A1	Aluminio / Aluminium / Alluminio	0,09 kg

Ánodo cola
Drive anode
Anodo piede



Ref.	R.O.		Peso Weight Peso
CM34127	34127T2	Cinc / Zinc / Zinco	0,59 kg
CM34127A	34127T2	Aluminio / Aluminium / Alluminio	0,22 kg

Ánodo cola
Drive anode
Anodo piede



Ref.	R.O.		Peso Weight Peso
CM892227	893404	Cinc / Zinc / Zinco	0,50 kg
CM892227A	893404	Aluminio / Aluminium / Alluminio	0,20 kg

MOTORES / ENGINES / MOTORI

Verado V6



Ref.	R.O.		Peso Weight Peso
CM880653	880653	Cinc / Zinc / Zinco	0,50 kg
CM880653A	880653	Aluminio / Aluminium / Alluminio	0,20 kg

MOTORES / ENGINES / MOTORI

Verado V6



Ref.	R.O.		Peso Weight Peso
CM818298	818298A1	Cinc / Zinc / Zinco	0,66 kg
CM818298A	818298A1	Aluminio / Aluminium / Alluminio	0,26 kg

MOTORES / ENGINES / MOTORI

Ánodo Transom
Gimbal anode
Anodo Transom



Ref.	R.O.		Peso Weight Peso
CM43396	43396	Cinc / Zinc / Zinco	0,66 kg
CM43396A	43396	Aluminio / Aluminium / Alluminio	0,25 kg

MOTORES / ENGINES / MOTORI

Ánodo Transom
Gimbal anode
Anodo Transom



Ref.	R.O.		Peso Weight Peso
CM89949	89949A1	Cinc / Zinc / Zinco	1,07 kg
CM89949A	89949A1	Aluminio / Aluminium / Alluminio	0,42 kg

MOTORES / ENGINES / MOTORI

Ánodo Transom
Gimbal anode
Anodo Transom



Ref.	R.O.		Peso Weight Peso
CM825271	8252711	Cinc / Zinc / Zinco	0,29 kg
CM825271A	8252711	Aluminio / Aluminium / Alluminio	0,11 kg

MOTORES / ENGINES / MOTORI

25 / 30 / 40 HP 4 Tiempos / Strokes / Tempi



Ref.	R.O.		Peso Weight Peso
CM8239121	8239121	Cinc / Zinc / Zinco	0,91 kg

MOTORES / ENGINES / MOTORI
50 / 75 / 90 / 100 HP
Super America 80HP / 155 HP

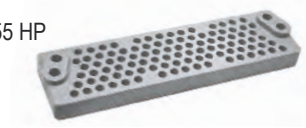

Ref.	R.O.		Peso Weight Peso
CM826134	826134	Cinc / Zinc / Zinco	0,25 kg
CM826134A	826134	Aluminio / Aluminium / Alluminio	0,10 kg

Ánodo cola
Drive anode
Anodo piede



Ref.	R.O.		Peso Weight Peso
CM09411	09411	Cinc / Zinc / Zinco	0,05 kg

MOTORES / ENGINES / MOTORI
4 - 7 HP



Ref.	R.O.		Peso Weight Peso
CM47820	47820	Cinc / Zinc / Zinco	0,33kg

MOTORES / ENGINES / MOTORI
20 HP



Ref.	R.O.		Peso Weight Peso
CM42121A2	42121A2	Cinc / Zinc / Zinco	0,30kg

Ánodo cola
Drive anode
Anodo piede

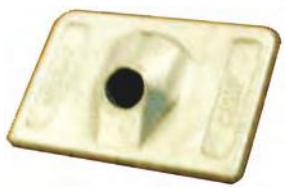

Ref.	R.O.		Peso Weight Peso
CM17264	17264T2	Cinc / Zinc / Zinco	0,46kg

Formula 60 HP
Ánodo cola / Drive



Ref.	R.O.		Peso Weight Peso
CM822157T2	822157T2	Cinc / Zinc / Zinco	0,48 kg

Ánodo cola
Drive anode
Anodo piede



Ref.	R.O.		Peso Weight Peso
CM984325	98432Q6	Cinc / Zinc / Zinco	0,42 kg
CM984325A	98432Q6	Aluminio / Aluminium / Alluminio	0,11 kg

Ánodo cola
Drive anode
Anodo piede



Ref.	R.O.		Peso Weight Peso
CM822777	822777Q1	Cinc / Zinc / Zinco	0,67kg

Ánodo cola
Drive anode
Anodo piede



Ref.	R.O.		Peso Weight Peso
CM942860	94286T1	Cinc / Zinc / Zinco	0,28kg

Fueraborda 25HP. Ánodo cola.
Outborad 25 HP. Drive anode.
Fuoribordo 25 HP. Anodo piede.



Ref.	R.O.		Peso Weight Peso
CM76214	76214	Cinc / Zinc / Zinco	0,28 kg
CM762145A	76214	Aluminio / Aluminium / Alluminio	0,11 kg

Ánodo cola
Drive anode
Anodo piede



Ref.	R.O.		Peso Weight Peso
CM89026	89026	Cinc / Zinc / Zinco	0,23kg

Ánodo cola
Drive anode
Anodo piede



Ref.	R.O.		Peso Weight Peso
CM67F-11325-00	894079002	Cinc / Zinc / Zinco	0,07kg

Fueraborda 90 HP. 4T. Ánodo cola.
Outborad 90 HP. 4 Strokes. Drive anode.
Fuoribordo 90 HP. 4 Tempi. Anodo piede.



Ref.	R.O.		Peso Weight Peso
CM826887M	826887M	Cinc / Zinc / Zinco	0,33kg

Ánodo motor.
Anode engine.
Anodo motore.



Ref.	R.O.		Peso Weight Peso
CM820503	8205031	Cinc / Zinc / Zinco	0,02kg



Ref.	R.O.		Peso Weight Peso
TEN00800	31640	Cinc / Zinc / Zinco	0,480kg

MOTORES / ENGINES / MOTORI
50HP



Ref.	R.O.		Peso Weight Peso
TEN00801	34127	Cinc / Zinc / Zinco	0,600kg

MOTORES / ENGINES / MOTORI
80 - 140 HP



Ref.	R.O.		Peso Weight Peso
TEN00802	94286	Cinc / Zinc / Zinco	0,270kg

MOTORES / ENGINES / MOTORI
25 HP



Ref.	R.O.		Peso Weight Peso
TEN00803	47820	Cinc / Zinc / Zinco	0,310kg

MOTORES / ENGINES / MOTORI
20 HP



Ref.	R.O.		Peso Weight Peso
TEN00804	46399	Cinc / Zinc / Zinco	0,400kg

MOTORES / ENGINES / MOTORI
50 - 140 HP



Ref.	R.O.		Peso Weight Peso
TEN00805	46396	Cinc / Zinc / Zinco	0,670kg

MOTORES / ENGINES / MOTORI
25 - 50 - 60- 75 - 80 - 90 - 100 - 115 - 190 HP



Ref.	R.O.		Peso Weight Peso
TEN00806	43994	Cinc / Zinc / Zinco	0,900kg

MOTORES / ENGINES / MOTORI
Alpha Gen II, Bravo.



Ref.	R.O.		Peso Weight Peso
TEN00806BIS	821631	Cinc / Zinc / Zinco	0,890kg



Ref.	R.O.		Peso Weight Peso
TEN00807	55989	Cinc / Zinc / Zinco	0,100kg

MOTORES / ENGINES / MOTORI
Alpha One, Bravo I.



Ref.	R.O.		Peso Weight Peso
TEN00808	34762	Cinc / Zinc / Zinco	0,270kg



Ref.	R.O.		Peso Weight Peso
TEN00809	85824	Cinc / Zinc / Zinco	0,030kg

MOTORES / ENGINES / MOTORI
4.5 - 9 HP



Ref.	R.O.		Peso Weight Peso
TEN00810	42121	Cinc / Zinc / Zinco	0,030kg

MOTORES / ENGINES / MOTORI
6 - 9.9 HP



Ref.	R.O.		Peso Weight Peso
TEN00811	09411	Cinc / Zinc / Zinco	0,050kg

MOTORES / ENGINES / MOTORI
4.5 - 7 HP



Ref.	R.O.		Peso Weight Peso
TEN00812	98432	Cinc / Zinc / Zinco	0,350kg

MOTORES / ENGINES / MOTORI
25 HP (1990+)



Ref.	R.O.		Peso Weight Peso
TEN00813	823912-1	Cinc / Zinc / Zinco	0,010kg

MOTORES / ENGINES / MOTORI
4.5 HP



Ref.	R.O.		Peso Weight Peso
TEN00814	821629	Cinc / Zinc / Zinco	0,700kg

MOTORES / ENGINES / MOTORI
Alpha One, Alpha Gen II.



Ref.	R.O.		Peso Weight Peso
TEN00815	821630	Cinc / Zinc / Zinco	0,980kg

MOTORES / ENGINES / MOTORI
Bravo I, II, III.



Ref.	R.O.		Peso Weight Peso
TEN00816	818298	Cinc / Zinc / Zinco	0,640kg

MOTORES / ENGINES / MOTORI
40 a V6 135 - 150 - 175 HP.
Verado.



Ref.	R.O.		Peso Weight Peso
TEN00817	806189	Cinc / Zinc / Zinco	0,120kg

MOTORES / ENGINES / MOTORI
Pistón Alpha
Piston Alpha
Pistone Alpha



Ref.	R.O.		Peso Weight Peso
TEN00818	806190	Cinc / Zinc / Zinco	0,340kg

MOTORES / ENGINES / MOTORI
Pistón Bravo
Piston Bravo
Pistone Bravo



Ref.	R.O.		Peso Weight Peso
TEN00819	806105	Cinc / Zinc / Zinco	0,230kg

MOTORES / ENGINES / MOTORI
Alpha One, Alpha Gen II.



Ref.	R.O.		Peso Weight Peso
TEN00820	76214-5	Cinc / Zinc / Zinco	0,340kg

MOTORES / ENGINES / MOTORI
Alpha.



Ref.	R.O.		Peso Weight Peso
TEN00821	89949	Cinc / Zinc / Zinco	1,180kg

MOTORES / ENGINES / MOTORI
150 - 200 HP.



Ref.	R.O.		Peso Weight Peso
TEN00822	825271	Cinc / Zinc / Zinco	0,290kg

MOTORES / ENGINES / MOTORI
30 - 40 HP.



Ref.	R.O.			Peso Weight Peso
TEN00823	823912	Ø 20 mm	Cinc / Zinc / Zinco	0,010kg
TEN00824	823913	Ø 24 mm	Cinc / Zinc / Zinco	0,020kg



Ref.	R.O.		Peso Weight Peso
TEN00825	826134	Cinc / Zinc / Zinco	0,240kg

MOTORES / ENGINES / MOTORI
75 HP - V6 40-50-115 EFI 4T / Strokes / Tempi



Ref.	R.O.		Peso Weight Peso
TEN00826	76214	Cinc / Zinc / Zinco	0,310kg

MOTORES / ENGINES / MOTORI
Verado - Bravo



Ref.	R.O.		Peso Weight Peso
TEN00827	17264	Cinc / Zinc / Zinco	0,510kg

MOTORES / ENGINES / MOTORI
Formula 60 HP.



Ref.	R.O.		Peso Weight Peso
TEN00828	806188	Cinc / Zinc / Zinco	0,170kg

MOTORES / ENGINES / MOTORI
Bravo I, III.



Ref.	R.O.		Peso Weight Peso
TEN00829	822157	Cinc / Zinc / Zinco	0,440kg

MOTORES / ENGINES / MOTORI
F25 - F50

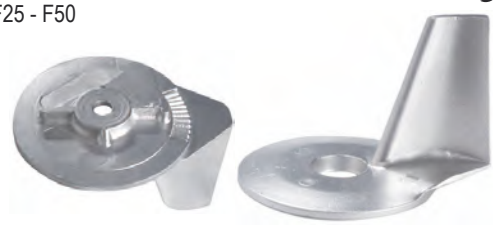

Ref.	R.O.		Peso Weight Peso
TEN00830	822777	Cinc / Zinc / Zinco	0,680kg

MOTORES / ENGINES / MOTORI
35 HP, V6 - MCM



Ref.	R.O.		Peso Weight Peso
TEN00831	826887M	Cinc / Zinc / Zinco	0,020kg

Ánodo motor.
Anode engine.
Anodo motore.



Ref.	R.O.		Peso Weight Peso
TEN00832	80653	Cinc / Zinc / Zinco	0,490kg

MOTORES / ENGINES / MOTORI
Verado 215- 275



Ref.	R.O.		Peso Weight Peso
TEN00833	893404	Cinc / Zinc / Zinco	0,110kg

MOTORES / ENGINES / MOTORI
Verado 215- 275



Ref.	R.O.		Peso Weight Peso
TEN00834	875208	Cinc / Zinc / Zinco	0,030kg

MOTORES / ENGINES / MOTORI
4T - 4 - 9.9 HP



Ref.	R.O.		Peso Weight Peso
TEN00835	76214-4	Cinc / Zinc / Zinco	0,260kg

Ánodo motor.
Anode engine.
Anodo motore.

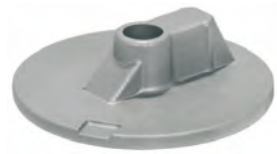

Ref.	R.O.		Peso Weight Peso
TEN00836	865182	Cinc / Zinc / Zinco	0,520kg

MOTORES / ENGINES / MOTORI
Bravo III



Ref.	R.O.		Peso Weight Peso
TEN00837	8M0012083	Cinc / Zinc / Zinco	0,330kg

MOTORES / ENGINES / MOTORI
Verado 350 CI - 6 Cil. 4T



Ref.	R.O.		Peso Weight Peso
TEN00838	847635001	Cinc / Zinc / Zinco	1,000kg

MOTORES / ENGINES / MOTORI
Verado 350 CI - 6 Cil. 4T



Ref.	R.O.		Peso Weight Peso
TEN00839	853762	Cinc / Zinc / Zinco	0,150kg

Ánodo motor.
Anode engine.
Anodo motore.



Ref.	R.O.		Peso Weight Peso
TEN00840	8239121	Cinc / Zinc / Zinco	0,510kg

Ánodo motor.
Anode engine.
Anodo motore.



Ref.	R.O.		Peso Weight Peso
TEN00841	804043	Cinc / Zinc / Zinco	0,040kg

Ánodo motor.
Anode engine.
Anodo motore.



TECNOSEAL save your dreams

Ref.	R.O.		Peso Weight Peso
TEN00842	8M0057772	Cinc / Zinc / Zinco	0,858kg

Ánodo motor.
Anode engine.
Anodo motore.



TECNOSEAL save your dreams

Ref.	R.O.		Peso Weight Peso
TEN00843AL	87915QA65	Aluminio / Aluminium / Alluminio	0,890kg

Ánodo motor.
Anode engine.
Anodo motore.



TECNOSEAL save your dreams

KIT ANODOS PARA FUERABORDAS
KIT ANODES FOR OUTBOARDS
KIT ANODI PER FUORIBORDO

Ref.	
CMVERADO6KITA	Aluminio / Aluminium / Alluminio
CMVERADO6KITM	Magnesio / Magnesium / Magnesio

MOTORES / ENGINES / MOTORI
Verado 6 cyl.



Ref.	
CMVERADO4KITA	Aluminio / Aluminium / Alluminio
CMVERADO4KITM	Magnesio / Magnesium / Magnesio

MOTORES / ENGINES / MOTORI
Verado 4 cyl. / Optimax.



MUELLE DE ARRANQUE
REWIND SPRING
MOLLA AVVIAMENTO

Ref.	R.O.
REC24-13421	24-29340A1-T1



Modelo HP HP Model Modello HP	series serial serie
Merc 4	2498136 - 4107219
Merc 4.5	4107220 +
Merc 6	1408611 - 2387383
Merc 7.5	2529895 +
Merc 9.8	Todos / All / Tutti
Mark (10) 10	Todos / All / Tutti
Merc 10	1290910 - 1455239
Mark (15) 15	Todos / All / Tutti
Merc 15	1288910 - 1349697
Merc 20	3537531 - 6443972
Merc 20	1292910 - 3537530
Mark (28) 22	Todos / All / Tutti
Merc 25	1467499 - 1499331
Merc 30	1271885 - 1356947
Merc 35	1217222 - 1271884
Merc 35	1356948 - 1448139
Merc 35 (*)	1571114 - 1960826
Mark (55) 40	831021 +.
Merc 40	1279685 - 1476509
Mark (58) 45	1139538 +
Merc 45	1476510 - 1531568
Merc 50	1421113 - 2116317
Mark (75) 60	Todos / All / Tutti
Merc 60	Todos / All / Tutti
Merc 65	1542745 - 1765043
Mark (78) 70	Todos / All / Tutti
Merc 70	Todos / All / Tutti

(*) Excepto 4 cyl. / Except 4 cyl. / Eccetto 4 cyl.

MOTORES DE ARRANQUE
STARTERS
MOTORINI AVVIAMENTO

Ref.	R.O.	Tiempos Strokes Tempi	Dientes Tooth Denti
PH130-0021	50-90983T1, 5090983A1, 50893889T, 8M0033984	2	10

MOTORES / ENGINES / MOTORI
6 - 25 HP (1977-06)



Ref.	R.O.	Tiempos Strokes Tempi	Dientes Tooth Denti
PH130-0061	50-803835T02	4	10

MOTORES / ENGINES / MOTORI
8, 9.9HP (209cc)



Ref.	R.O.	Tiempos Strokes Tempi	Dientes Tooth Denti
PH130-0014	50-825991A2	4	10

MOTORES / ENGINES / MOTORI

8, 9.9HP
(Bodensee, Inter.) 232 cc



Ref.	R.O.	Tiempos Strokes Tempi	Dientes Tooth Denti
PH130-0034	50-852570T, 50-859168, 50-859168T, 50-857065	4	9

MOTORES / ENGINES / MOTORI

8, 9.9, 13.5, 15 HP



Ref.	R.O.	Tiempos Strokes Tempi	Dientes Tooth Denti
PH130-0006	50-853805T03	4	9

MOTORES / ENGINES / MOTORI

10 Carb (2 cyl)
15 Carb (2 cyl) / JCI
20 Carb (2 cyl)
25 EFI (3 cyl)
25 Jet EFI (3 Cyl)
30 EFI (3 cyl)



Ref.	R.O.	Tiempos Strokes Tempi	Dientes Tooth Denti
PH130-0049	50-97693M, 50-96359M, 50-814980M	2	11

MOTORES / ENGINES / MOTORI

MARINER 20-40HP (1977-92)



Ref.	R.O.	Tiempos Strokes Tempi	Dientes Tooth Denti
PH130-0029	50-830308T, 50-859169T, 50-888151T, 50-893886T	4	9

MOTORES / ENGINES / MOTORI

25 HP (1998-06)



Ref.	R.O.	Tiempos Strokes Tempi	Dientes Tooth Denti
PH130-0028	50-854636T, 50-859170T, 50-884045T, 50-888160T, 50-893897T, 854636T 859170T, 893887T	4	9

MOTORES / ENGINES / MOTORI

30-40 HP (1999+)



Ref.	R.O.	Tiempos Strokes Tempi	Dientes Tooth Denti
PH130-0024	50-822462, 50-822462T1, 50-893890T, 822462T1, 893890T	2	10

MOTORES / ENGINES / MOTORI

30-60 HP (1994-10)



Ref.	R.O.	Tiempos Strokes Tempi	Dientes Tooth Denti
PH130-0072	50-41583, 50-41583T	2	10

MOTORES / ENGINES / MOTORI

35, 40 HP (1980-89)



Ref.	R.O.	Tiempos Strokes Tempi	Dientes Tooth Denti
PH130-0040	50-55601A, 50-55601A2, 50-30829, 50-32403, 50-37345, 50-38890, 50-38890A1	2	9

MOTORES / ENGINES / MOTORI

35, 50 HP (1980-89)



Ref.	R.O.	Tiempos Strokes Tempi	Dientes Tooth Denti
PH130-0033	50-859377T, 50-884044T, 50-888161T 50-893888T	4	9

MOTORES / ENGINES / MOTORI

40, 50, 60 HP (2001+) 4 Cyl



Ref.	R.O.	Tiempos Strokes Tempi	Dientes Tooth Denti
PH130-0062	50-814980M	2	11

MOTORES / ENGINES / MOTORI

40HP (Twin Carb) (1986-92)



Ref.	R.O.	Tiempos Strokes Tempi	Dientes Tooth Denti
PH130-0011	50-73521, 50-73521T 50-44369A1, 50-44369	2	10

MOTORES / ENGINES / MOTORI

40-60 HP (1976-06)



Ref.	R.O.	Tiempos Strokes Tempi	Dientes Tooth Denti
ARC5362	50-834749, 50-859171T, 50-898265001	4	9

MOTORES / ENGINES / MOTORI

40 HP
40 ITALY
45 BONDESEE
50
50 BigFoot



Ref.	R.O.	Tiempos Strokes Tempi	Dientes Tooth Denti
PH130-0041	50-65436, 50-44369A1, 50-57485, 50-60315, 50-66015, 50-66015-2, 50-88119, 50-893891T	2	10

MOTORES / ENGINES / MOTORI

40-100 HP (1979-10)



Ref.	R.O.	Tiempos Strokes Tempi	Dientes Tooth Denti
PH130-0015	50-44369A1, 50-73521	2	10

MOTORES / ENGINES / MOTORI

40-45-50-55-60 HP (1984-06)



Ref.	R.O.	Tiempos Strokes Tempi	Dientes Tooth Denti
PH130-0022	50-820193, 50-820193-1, 50-820193-T1	2	13

MOTORES / ENGINES / MOTORI

40-50 HP (1992-99)



Ref.	R.O.	Tiempos Strokes Tempi	Dientes Tooth Denti
PH130-0025	50-819271, 50-820193A1	2	13

MOTORES / ENGINES / MOTORI

40-50HP (1991-94)



Ref.	R.O.	Tiempos Strokes Tempi	Dientes Tooth Denti
PH130-0007	97072M, 81490M, 50-92669M	2	9

MOTORES / ENGINES / MOTORI

50-60HP (2 Cyl) (1977-87)



Ref.	R.O.	Tiempos Strokes Tempi	Dientes Tooth Denti
PH130-0010	50-673341, 50-87788, 50-55304A-1, 50-48643, 50-45822, 50-37274, 50-32411, 50-31976, 50-30842, 50-29105	2	10

MOTORES / ENGINES / MOTORI

65-125HP (2 Cyl) (1977-87)



Ref.	R.O.	Tiempos Strokes Tempi	Dientes Tooth Denti
PH130-0019	50-66015, 50-66015T1	2	8

MOTORES / ENGINES / MOTORI

65-125HP (1976-11)
JET DRIVE & Outboard
4 cyl. en línea / inline / in rete.



Ref.	R.O.	Tiempos Strokes Tempi	Dientes Tooth Denti
PH130-0042	50-60975, 50-72467, 50-57465A1, 50-58330	2	10

MOTORES / ENGINES / MOTORI

65-175HP, V115, V140



Ref.	R.O.	Tiempos Strokes Tempi	Dientes Tooth Denti
PH130-0047	480955, 490955, 50-819085, 50-819085-1, 50-819085-T1, 50-583869, 50-616955-1	2	9

MOTORES / ENGINES / MOTORI

70-150HP (1983-99)



Ref.	R.O.	Tiempos Strokes Tempi	Dientes Tooth Denti
PH130-0057	50-881368T, 50-881368T1, 50-881368T2	4	13

MOTORES / ENGINES / MOTORI

75/80/90/100/115HP (EFI)
(2001-06)



Ref.	R.O.	Tiempos Strokes Tempi	Dientes Tooth Denti
PH130-0055	50-804312T1	4	13

MOTORES / ENGINES / MOTORI

75, 90HP (2000-05)



Ref.	R.O.	Tiempos Strokes Tempi	Dientes Tooth Denti
REC86976	50-856996T, 50-86976	2	9

MOTORES / ENGINES / MOTORI

115-250 V6 (2000-03)
200-225 V6 (1978-88)
Con volante de 135 dientes.
With 135 tooth flywheel.
Per volano da 135 denti.



Ref.	R.O.	Tiempos Strokes Tempi	Dientes Tooth Denti
PH130-0066	50-892339T, 50-853329T,	2 / 4	14
	50-853329T01, 50-893892T		

MOTORES / ENGINES / MOTORI

75, 90, V135, V150, V175, V200, 2.5L DFI,
0T178500 +,
200HP, 250HP, 3.0L, 0T467442 +,
4 - 6 cyl. en línea / inline / 4 - 6 cil. in linea.
Verados.
Funcionan con solenoides Bendix.
Models with solenoid operated Bendix.
Funzionano con solenoidi Bendix.



Ref.	R.O.	Tiempos Strokes Tempi	Dientes Tooth Denti
PH130-0009	50-819968, 50-819968-1, 50-819968-2,	2	9
	50-819968-3, 50-819968-4, 50-819968T4,		
	50-853869, 50-853869-T		

MOTORES / ENGINES / MOTORI

90-135HP (1993-00) JET DRIVE & Outboard



Ref.	R.O.	Tiempos Strokes Tempi	Dientes Tooth Denti
PH130-0046	50-79472, 50-44415, 50-79472 1	2	8
	50-77141, 50-884238T		

MOTORES / ENGINES / MOTORI

100-250HP (1976-05)



Ref.	R.O.	Tiempos Strokes Tempi	Dientes Tooth Denti
PH130-0030	50-833153, 50-833153-1, 50-833153-2,	2	9
	50-833153-5		
	50-833153-3	4	9

MOTORES / ENGINES / MOTORI

V6 DFI, 135 - 150 DFI (2.5L), 200 - 225 DFI (1997-99)



Ref.	R.O.	Tiempos Strokes Tempi	Dientes Tooth Denti
PH130-0031	50-832997 1, 50-832997 2	2	8

MOTORES / ENGINES / MOTORI

MOTORES SPORT JET V6, 2.5L (1997-05)



Ref.	R.O.	Tiempos Strokes Tempi	Dientes Tooth Denti
PH130-0023	50-818445-2, 50-818445-3, 50-818445-5	2	8

MOTORES / ENGINES / MOTORI

225-250HP (1994-01)



Ref.	R.O.	Tiempos Strokes Tempi	Dientes Tooth Denti
PH130-0074	50-888333T, 50-888333T1	4	13

MOTORES / ENGINES / MOTORI

225 EFI (2003-06)



SOLENOIDES Y RELÉS
SOLENOID AND RELAYS
SOLENOIDI E RELÉ

Ref.	R.O.
PH375-0031	65057A1

(2T / 2 strokes / 2 Tempi)
Arranque solenoide
Starter solenoid
Avviamento solenoide



Ref.	R.O.
REC89-825096T01	89-825096T, 89-825096T01

MOTORES / ENGINES / MOTORI

(2& 4T / strokes / Tempi)



Ref.	R.O.
REC89-96054T	89-96054

MOTORES / ENGINES / MOTORI

15 - 200 HP
(2T / 2 strokes / 2 Tempi)



Ref.	R.O.
PHSEL-239	89-96158

MOTORES / ENGINES / MOTORI

35 - 300 HP
(2T / 2 strokes / 2 Tempi)



Ref.	R.O.
PH375-0011	25661-1

MOTORES / ENGINES / MOTORI

40 - 150 HP (1970-1985)
(2T / 2 strokes / 2 Tempi)
Arranque solenoide
Starter solenoid
Avviamento solenoide



Ref.	R.O.
PH375-0036	89-825842A1, 89-850188A1, 89-818999A1, A2

MOTORES / ENGINES / MOTORI
65 - 3.0L
(2T / 2 strokes / 2 Tempi)
(4T / 4 strokes / 4 Tempi)



Ref.	R.O.
PH375-0037	89-817109A1, 89-817109A2, 89-817109A3

MOTORES / ENGINES / MOTORI
65 - 250 HP
(2&4 T / 2&4 strokes / 2&4 Tempi)



Ref.	R.O.
REC54293A10	54293A10

MOTORES / ENGINES / MOTORI
75 HP (4 Cyl)
V-150 - V-200 HP (2T / 2 strokes / 2 Tempi)



Ref.	R.O.
PH375-0034	89-818997A1, 89-850187T1

MOTORES / ENGINES / MOTORI
30 - 225 HP (2T / 2 strokes / 2 Tempi)
25, 30, 40 HP (4T / 4 strokes / 4 Tempi)



Ref.	R.O.
PH375-0028	89-68258A4

MOTORES / ENGINES / MOTORI
100 - 250 HP (1976-1995)
(2T / 2 strokes / 2 Tempi)
Arranque
Starter
Avviamento



Ref.	R.O.
REC89-818864T	89-818864T

MOTORES / ENGINES / MOTORI
V-150 - V-200 HP
XR-4
(2T / 2 strokes / 2 Tempi)



Ref.	R.O.
REC87-18211	87-18211

12 Volt., 30 Amp.
35 - V-200 (2T / 2 strokes / 2 Tempi)

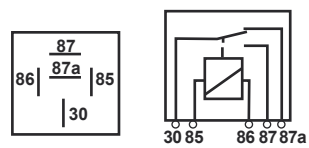



Ref.	R.O.
REC882751A1	882751A1, 828151, 828151A1, 882751A2

MOTORES / ENGINES / MOTORI
(2& 4T / strokes / Tempi)



GUÍA RELÉS
RELAY GUIDE
GUIDA RELE

HP	SERIE SERIAL SERIE	RELÉ ARRANQUE STARTER RELAY AVVIAMENTO RELÉ	RELÉ POWER TRIM POWER TRIM RELAY RELE POWER TRIM
9.9 (323cc)	OG760300 - OT979999	REC89-825096T01	
15 (323cc)	OG760300 - 1B727495	REC89-825096T01	
25 (4T/4 stroke / 4 tempi)	OG590000 +	PH375-0034	REC882751A1
30 (Carb)	OG760300 +		REC882751A1
30 (EFI)	OT409000 - 1B226999	REC89-825096T01	REC882751A1
40 (3 Cyl, Carb)	OG760300 +		REC882751A1
40 (3 Cyl, EFI)	OT40900 +	REC89-825096T01	REC882751A1
40 (4 Cyl, Carb)	OT228405 - OT598999	REC89-825096T01	REC882751A1
40 (4 Cyl, EFI)	OT409000 +	REC89-825096T01	REC882751A1
45 (Bondesee)	OG231123 - OG472132	REC89-825096T01	REC821509
45 (Bondesee)	OG472133 - OT178499	REC89-825096T01	REC882751A1
50 (4 Stroke)	OG231123 - OT178499	REC89-825096T01	REC821509
50 (4Cyl, Carb. 996cc)	OT178500 - OT598999	REC89-825096T01	REC882751A1
50 (4Cyl, EFI 996cc)	OT409000 +	REC89-825096T01	REC882751A1
60 (4Cyl, Carb. 996cc)	OT178500 - OT800999	REC89-825096T01	REC882751A1
60 (4Cyl, EFI 996cc)	OT409000 +	REC89-825096T01	REC882751A1
75 (Carb, 1596cc)	OG960500 - 1B226999	REC89-825096T01	
75 (EFI 1596cc)	1B366823 +	PH375-0036	
90 (Carb 1596cc)	OG960500 - 1B226999	REC89-825096T01	
90 (EFI 1731cc)	1B366823 +	REC89-825096T01	
115 (EFI w/ 2 relay Trim)	OT178500 - OT800999		REC882751A1
115 (EFI 1731cc)	OT809000 - 1B366822		REC882751A1
115 (EFI 1731cc)	1B366823 +	REC89-825096T01	
Verado 4 & 6yl. (Todos / Alls / Tutti)	Todos / Alls / Tutti	REC882751A04	REC882751A04

Ref.	R.O.
REC821509	821509

MOTORES / ENGINES / MOTORI
(2& 4T / strokes / Tempi)



Ref.	R.O.
REC882751A04	882751A04

MOTORES / ENGINES / MOTORI
Verado
(4T / 4 strokes / 4 Tempi)



TRIM & POWERTRIM

VÁLVULA DE ALIVIO
MANUAL RELEASE VALVE
VALVOLA DI SCARICO MANUALE

Ref.	R.O.
REC893929A01	893929A01, 813442A2, 813442A1, 811618A1, 811618, 812843A1, 99660A1



LATIGUILLOS TRIM
TRIM HOSES
TUBO TRIM

Ref.	R.O.
REC32-88005	32-88005
REC32-88006	32-88006

MOTORES / ENGINES / MOTORI
35 HP (2 cyl)
50, 60, 70 HP (3 cyl)
45, 50 HP (4 cyl)



TRIM COMPLETO
COMPLETE TRIM ASSEMBLY
MOTORINO TRIM COMPLETO

Ref.	R.O.
REC827675A1	827675A1

MOTORES / ENGINES / MOTORI
2 cables / 2 wires / 2 cavi
25 - 50 HP



Ref.	R.O.
PH200-T033	824051, 830250A6

MOTORES / ENGINES / MOTORI
3 cables / 3 wires / 3 cavi
65 & 80 JET, 75 & 90 (3 cyl)
100,115 & 125 (4 cyl)



Ref.	R.O.
PH200-T010	828708, 8782654A2, 828708T, 878265A4

MOTORES / ENGINES / MOTORI
Último modelo V6 / Late model V6 / Ultimo modello V6
135, 150XR6, 175, 200, 225, 250, (EFI / DFI)
300X (3.0L EFI)
MAGNUM III, 105-140 JET



Ref.	R.O.
REC826729A10	99186, 99186T, 99186-1, 826729A4, 826729A4/07, 826729A/08

MOTORES / ENGINES / MOTORI
Con sistema TRIM, Design I
With TRIM system, Design I
Con il sistema di TRIM, Design I
40 - 220HP O/B (1985-92)



Ref.	R.O.
PH200-T003	818903A1, 819762A4-A7, 819479A1, 809885A2, 819480A1, 81977A8-A9, 822870A1, 830250A3-T3, 832021A1-T4-A2-T2, 855654A1-T2, 19217A1-A5

MOTORES / ENGINES / MOTORI
2 cables / wires / cavi

30 JET & 4T / 4 strokes / 4 Tempi, 35,
40 2,3 y 4 cyl., 40 & 45 4T / 4 strokes / 4 Tempi, & BIGFOOT,
50 3 cyl., 4T / 4 strokes / 4 Tempi, & BIGFOOT,
55 3 cyl., 60 3 cyl. & BIGFOOT,
65 JET, 75 3 cyl. & 4T / 4 strokes / 4 Tempi,
80 JET,90 3 cyl. & 4T / 4 strokes / 4 Tempi,
100,115 & 125 4 cyl.



Ref.	R.O.
PH200-T008	823653A5/A9, 92459A4

MOTORES / ENGINES / MOTORI
225-250-275HP
V-3.4L



Ref.	R.O.
PH200-T015	17649A1/A02

MOTORES / ENGINES / MOTORI
V150 / V175 / V200 / V225 / V3.4L



Ref.	R.O.
REC878265A6	811628, 878265A6

MOTORES / ENGINES / MOTORI
Con sistema TRIM, Design II
With TRIM system, Design II
Con il sistema di TRIM, Design II
40 - 225HP (1985+)



ALTERNADOR
ALTERNATOR
ALTERNATORE

Ref.	R.O.
PH300-0048	892940T/T01

MOTORES / ENGINES / MOTORI

Verado (Todos / all / tutti) 135 HP+
(4 & 6 cyl)
12 Volt. 70 Amp



Ref.	R.O.
PH300-0030	881248T, 875285T1, 889955

MOTORES / ENGINES / MOTORI

2.5 L
12 Volt. 50 Amp

No reemplaza Nipponeso
4 Polea serpentín
Not replace Nipponeso
4 Groove Pulley
Non sostituisce Nipponeso
4 Puleggia a serpentina



Ref.	R.O.
PH300-0031	881247A1, 875286A1, 889956

MOTORES / ENGINES / MOTORI

3.0 L
12 Volt. 50 Amp

No reemplaza Nipponeso
4 Polea serpentín
Not replace Nipponeso
4 Groove Pulley
Non sostituisce Nipponeso
4 Puleggia a serpentina



Ref.	R.O.
PH300-0019	821663A1, 821663

MOTORES / ENGINES / MOTORI

3.0 L
200 / 225 Carb & EFi
12 Volt. 50 Amp



Ref.	R.O.
MES3164M	828506, 875286TA1, 881247A1
	889956

MOTORES / ENGINES / MOTORI

3.0 L
200 / 225 DFi
12 Volt. 50 Amp
4 Polea serpentín / Groove Pulley /
Puleggia a serpentina



Ref.	R.O.
PH300-0047	50-897755T, 8M0063970

MOTORES / ENGINES / MOTORI

75 / 80 / 90 / 100 / 115 HP EFi
(4T / Strokes / Tempi)
12 Volt. 50 Amp
4 Polea serpentín / Groove Pulley /
Puleggia a serpentina



REGULADORES Y RECTIFICADORES
REGULATOR AND RECTIFIERS
REGOLATORI E RADDRIZZATORI

Ref.	R.O.
PH350-0003	332-2910, 62351, 816770, 78614

MOTORES / ENGINES / MOTORI

7.5 - 200HP



Ref.	R.O.
PAF15-07060001	853811008

MOTORES / ENGINES / MOTORI

8, 9.9HP (209cc) 4T / 4 stroke / 4 tempi



Ref.	R.O.
REC664-81970-62	810937M, 810937T, 8M0091976

MOTORES / ENGINES / MOTORI

9.9C (682-) Series / serial / serie
15C (684-) Series / serial / serie
55 (663-) Series / serial / serie



Ref.	R.O.
REC893640T01	883072T2, 854515T2, 893640T01, T1

MOTORES / ENGINES / MOTORI

2, 3, 4, 6 cyl.
(Para 6 cyl. requiere 2 unidades
For 6 cyl. requiered 2 units
Per 6 cil. richiede 2 unità.)

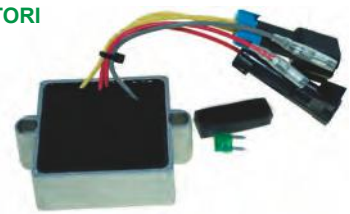

25HP- 2 cyl. (1999-05)
30-40 HP - 3 cyl. (2002-05)
40, 50, 60 HP - 4 cyl. (2002-07)
135, 140, 150, 175, 200, 240 HP - 6 cyl. (2000-05)
30/40/50/60 HP (EFI 4T / 4 stroke / 4 tempi)

Ref.	R.O.
REC67F-81960-12	804278T11, 804278T, 804278T1

MOTORES / ENGINES / MOTORI

Design I
75 HP (4T / 4 stroke / 4 tempi) (OG960500 - 1B226999)
90 HP (4T / 4 stroke / 4 tempi) (OG960500 - 1B226999)



Ref.	R.O.
REC881346T	881346T

MOTORES / ENGINES / MOTORI

75, 80, 90, 100, 115 HP
(EFI 4T / 4 stroke / 4 tempi)



Ref.	R.O.
REC883072T	81579-1-2-3-4-5, 815279T-2-4-5, 815279A1-2-3, 817411, 830179-2, 830179A1-2-3, 830179T, 854515, 854515T1, 883072T, 854515T1, 883072T

MOTORES / ENGINES / MOTORI

105HP, 225 HP (1989-91)
105 - 225HP (1992-05)

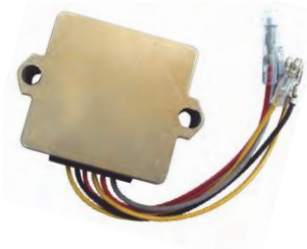

STARTOR
STARTOR
STARTORI

Ref.	R.O.
REC398-5454A17	398-5454A2, A5, A6, A7, A8, A9, A17, A18, A55

MOTORES / ENGINES / MOTORI

6 Cyl. (1978-88) 9 Amp



Ref.	R.O.
REC398-5454A35	398-5454A11-A15-A16-A30-A31-A32-A34-A35-A36-A61-A64-A66

MOTORES / ENGINES / MOTORI

16 Amp. 6 cyl.
(1980-88)



Ref.	R.O.
REC339-6120A1	339-5212A1, 339-5313A1, 339-5589A1, 339-5590A1, 339-6119A1, 339-6120A1

Sólo 2 bobinas
2 coils only
Solo 2 bobine

2 cyl.



Ref.	R.O.
REC86617A20	86617A2-A3-A5-A9-A11-A13-A17-A20

MOTORES / ENGINES / MOTORI

2 Cyl. Kit.
6 - 25 HP



Ref.	R.O.
REC398-852386T8	398-852386T8, 398-852386A4

MOTORES / ENGINES / MOTORI

25, 30, 40 HP (4T / Strokes / Tempi)
16 Amp
Arranque manual
Manual Start
Avviamento manual
(2 & 3 cyl)



Ref.	R.O.
REC398-852387T9	398-852387T9, 398-852387A4

MOTORES / ENGINES / MOTORI

25, 30, 40 HP (4T / Strokes / Tempi)
16 Amp
Arranque eléctrico
Electric Start
Avviamento elettrico
(2 & 3 cyl)



Ref.	R.O.
PH400-0002	398-832075A3-A4-A5-A6-A9-A12, 398-9873A22-A28

MOTORES / ENGINES / MOTORI

16 Amp. 2, 3, 4 cyl.

30 HP - 2 cyl. (1996-99)
3, 40, 50, 55, 65, 75, 90 HP - 3 cyl. (1997-07)
80, 115, 125 HP - 4 cyl. (1996-06)
100, 120 HP - 4 cyl. (1995-00)



Ref.	R.O.
REC398-832074A4	398-9710A11-12-14-15-22-23-25-28-30-31-33-34-36-38-39-43-45-46-47-48-49, 398-9873A9-17-19-24-25-28-29-32-33-35-38-39, 398-818535A17-18, F747095

MOTORES / ENGINES / MOTORI

16 Amp. 2, 3, 4 cyl.

40, 50, 55, 60, 65, 70, 75, 80, 90, 95 HP - 3 cyl. (1987-97)
30 Jet, 40, 80, 100, 115, 120, 125 HP - 4 cyl. (1989-97)
Se debe usar con regulador REC883072T.
Must be used with regulator REC883072T.
Bisogna utilizzarlo con regolatore REC883072T.



Ref.	R.O.
REC398-8778A29	398-8778A10-16-17-18-21-22-23-24-25-26-27-28-29, 398-818535A3-5-8-9-10-13-14-15, F749095

MOTORES / ENGINES / MOTORI

9 Amp. 2, 3, 4 ty .
Se puede usar tanto con regulador como con rectificador.
It can be used with either a voltage regulator or a rectifier.
Si più utilizzae sia con il regolatore che con il retificatore.

40 HP - 4 cyl. (1989-91)
70-80 HP (1987-89)
90 HP (1987-92)
90 HP- 3 cyl. (1993)
100 HP (1988-96)
115 HP (1989-93)
125 HP - 4 cyl. (1994-96)



Ref.	R.O.
REC398-5704A7	398-5704A2-A4-A5-A7,

MOTORES / ENGINES / MOTORI

9 Amp
50, 60 HP - 3 cyl. (1984-90)
65 HP- 3 cyl. (1976)
70 HP - 3 cyl. (1977-85)



Ref.	R.O.
REC398-9610A18	398-9610A18

MOTORES / ENGINES / MOTORI

Kit conversión de arranque.
Kit starter conversion.
Kit conversione Starter

40 Amp.
135-200 HP
V-models



Ref.	R.O.
REC398-9610A19	398-9610A3 / A5 / A6 / A9 / A 14 / A19 / A22 / A24 / A 33

MOTORES / ENGINES / MOTORI

135 HP +
40 Amp, 6 cyl



TRIGGERS

Ref.	R.O.
REC98450A10	98450A1-A3-A5-A10

MOTORES / ENGINES / MOTORI

6 - 25 HP - 2 Cyl.



Ref.	R.O.
REC96455A8	68162A3, 68162A6, 96455A1, 96455A8

MOTORES / ENGINES / MOTORI

3 Cyl.
50, 60 HP (1984-90)
65 HP (1976-79)
70 HP (1977-87)



Ref.	R.O.
REC99021A14	99021A14, 99021A11

MOTORES / ENGINES / MOTORI

30 - 40 HP - 2 Cyl. (1994-99)
Motores con módulos TPM.
Engines w/TPM Modules.
Motori con moduli TPM.



Ref.	R.O.
REC853960T	853960T, 855747A1

MOTORES / ENGINES / MOTORI

30 - 40 HP - 2 Cyl. (1998-05)



Ref.	R.O.
REC854512T	854512T, 834520T, 855745A12

MOTORES / ENGINES / MOTORI

30, 40, 50, 65, 75, 90 HP
(1996-05)



Ref.	R.O.
REC96452A4	73372A1, 73410A1, 76681A1, 770002, 96452A1-A4-A5

MOTORES / ENGINES / MOTORI

4 Cyl.
40, 45 HP (1989-97)
45 HP (1981-89)
50 HP (1976-85)
80 HP (1978-79)
85 HP (1976-77)



Ref.	R.O.
REC99021A16	99021A3, A5, A8, A13, A15, A16

MOTORES / ENGINES / MOTORI

70, 75, 80, 90 HP - 3 Cyl.



Ref.	R.O.
REC96455A9	681621, A5, A8, 96455A4, A6, A9

MOTORES / ENGINES / MOTORI

90 - V225 HP - 6 Cyl.
Jet, MagnumII, MagnumIII (105, 150 HP)
XR4, XR6 (150, 175 HP)
Promax, Super Magnum (150, 200, 225 HP)



Ref.	R.O.
REC854513T	834821T, 855748A2, 854513T

MOTORES / ENGINES / MOTORI

100 -115 -125 HP - 80JET- 4 Cyl.



Ref.	R.O.
REC99021A6	99021A2, A6, K2

MOTORES / ENGINES / MOTORI

Mariner 100, 115, 125 HP - 4 Cyl.
JET 80 HP



Ref.	R.O.
CDI134-6456-18	96455A18, 96455T18

MOTORES / ENGINES / MOTORI

135 - 240 HP - 6 Cyl. 6 PIN CONNECTOR
135, 150, 175, 200 - XR6 HP 2.5L, 240 HP
2T / 2 Strokes / 2 Tempi
(2000 - 2007)



CAJAS NEGRAS
POWER PACKS
CENTRALINE

Ref.	R.O.
REC803034T	823034T

MOTORES / ENGINES / MOTORI

2.5, 3.3, 3 HP - 1 Cyl.



Ref.	R.O.
REC16061T04	16061T04

MOTORES / ENGINES / MOTORI

4, 5 HP - 1 Cyl.
2 T / 2 Strokes / 2 Tempi



Ref.	R.O.
REC339-6222A10	339-5287, 339-6222A1-4-6-8-10, 339-778A1-3-5-6-9-12, 332-5524A1-2

MOTORES / ENGINES / MOTORI

4 - 20 HP - 2 Cyl.



Ref.	R.O.
REC855713A3	855713A3, 855713A4

MOTORES / ENGINES / MOTORI

6 - 25 HP - 2 Cyl.



Ref.	R.O.
REC696-85540-12	41305M

MOTORES / ENGINES / MOTORI

Mariner 6C/D, 8C, W-48/W-55



Ref.	R.O.
REC6G9-85540-29	825667, 825667T

MOTORES / ENGINES / MOTORI

8 Bodensee (4T / 4 Strokes / 4 Tempi) Inter.
USA (OH017100+)

9.9 (232 cc) (4T / 4 Strokes / 4 Tempi)
USA (OH000058-OH016909)



Ref.	R.O.
REC803704	803704T

MOTORES / ENGINES / MOTORI

Mercury 9.9, 15, 18 HP (Inter.) 2 Cyl.



Ref.	R.O.
REC695-85540-11	430775/M

MOTORES / ENGINES / MOTORI

Mariner 9.9C, 15C, 15K, W15, 20C, 25C

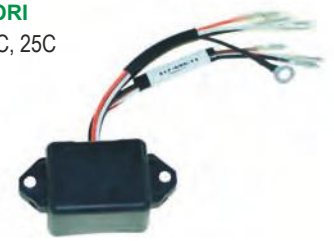

Ref.	R.O.
REC3G2-06060-2	803706A3, 8M0047313, 8M0071855

MOTORES / ENGINES / MOTORI

9.9, 15, 18 HP - 2 Cyl. (Inter.)



Ref.	R.O.
REC18495A30	18495A9, A14, A15, A20, A21, A25, A30

MOTORES / ENGINES / MOTORI

15 - 25 HP - 2 Cyl.



Ref.	R.O.
REC899883230	339-7452 A2, A3, 899883230

MOTORES / ENGINES / MOTORI

18 - 20 HP (1979-87) - 2 Cyl.



Ref.	R.O.
REC339-7452A19	339-7452A1, A2, A3, A7, A8, A9, A10, A11, A14, A15, A21

MOTORES / ENGINES / MOTORI

20 - 35 HP - 2 Cyl.



Ref.	R.O.
REC332-4911A8	332-4911A2-3-5-8, 338-4733A2

MOTORES / ENGINES / MOTORI

20 - 40 HP - 2 Cyl.

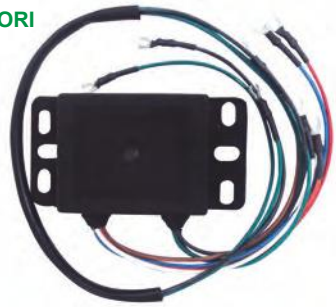

Ref.	R.O.
REC300-03107	332-5772A5, 332-5772A1, 332-5772A2, 332-5772A3, 332-5772A7

MOTORES / ENGINES / MOTORI

30 - 115 HP - 4 Cyl.



Ref.	R.O.
REC6F5-85540-22	11737T

MOTORES / ENGINES / MOTORI

Mariner K40 HP



Ref.	R.O.
REC18495A13	18495A4-5-6-8-13

MOTORES / ENGINES / MOTORI

40 - 50 HP - 2 Cyl.

No para / not for / Non per
A9-14-16-20-21-30



Ref.	R.O.
REC19052A8	19052A1, 2, 3, 4, 5, 6, 8

MOTORES / ENGINES / MOTORI

45 - 60 HP - 3 Cyl.



Ref.	R.O.
REC663-85540-15	3030T/M

MOTORES / ENGINES / MOTORI

MARINER 48 / 55 / W-48,
60 HP - 2 Cyl.



Ref.	R.O.
REC300-01852	332-5524,A1, 332-7778, A1, A3, A5, A6, A9, A12, A14

MOTORES / ENGINES / MOTORI

50 - 250 HP



Ref.	R.O.
REC18495A26	18495-A10-12-15-18-19-26

MOTORES / ENGINES / MOTORI

65 - 95 HP - 3 cyl.



Ref.	R.O.
REC332-2986A27	332-2986A22, 332-2986A21, 332-2986A25, 332-2986A27

MOTORES / ENGINES / MOTORI

65 - 150 HP - 4/6 Cyl.



GUÍA / APPLICATION / GUIDE

HP	Modelo Model Modello	Cyl.	Año Year Anno	Serie Serial Seriale	Caja Negra Switch Centraline	Startor	Trigger	Regulador Regulator Regolatore
2		1		OT884302 +	REC803034T			
2.5, 3.3		1		OP017000 +	REC803034T			
4	Gnat	2	1976-80	9075839-5595531	REC339-6222A10	REC339-6120A1		
	40	2	1980	5589202-5595531	REC339-6222A10	REC339-6120A1		
6		2	1986-96	A197112-OG289100	REC339-7452A19	REC86617A20	REC98450A10	
7.5	75	2	1974-86	3801458-A197111	REC339-6222A10	REC339-6120A1		PH350-0003
8		2	1986-96	A197112-OG289100	REC339-7452A19	REC86617A20	REC98450A10	
9.8	110	2	1974-78	3795659-5206549	REC339-6222A10	REC339-6120A1		PH350-0003
		2	1979-85	5206550-6620196	REC339-6222A10	REC339-6120A1		
9.9		2	1986-96	A197112-OG289100	REC339-7452A19	REC86617A20	REC98450A10	
10		2	1986-96	A197112-OG289100	REC339-7452A19	REC86617A20	REC98450A10	
15	S15	2	1988-93	B238464-OG044365	REC339-7452A19	REC86617A20	REC98450A10	
	XD/S15	2	1996-97	OG438000-OG760299	REC339-7452A19	REC86617A20	REC98450A10	PH350-0003
	Sea Pro	2	1996-97	OG438000-OG760299	REC339-7452A19	REC86617A20	REC98450A10	PH350-0003
	SEAPRO XD	2	1994-97	OG044027-437999	REC18495A30	REC86617A20	REC98450A10	PH350-0003
	SUPER	2	1994-97	OG044027-437999	REC18495A30	REC86617A20	REC98450A10	PH350-0003
18		2	1980-93	5837437-OG044026	REC899883230	REC86617A20	REC98450A10	
	XD	2	1979-87	5837437-B114230	REC899883230	REC86617A20	REC98450A10	
20	200	2	1973-77	3537531-4709592	REC332-4911A8			
		2	1977-81	4709593-5837436		REC339-6120A1		
	XD	2	1979-87	5837437-B114230	REC899883230	REC86617A20	REC98450A10	
		2	1980-87	5705532 - B238463	REC339-7452A19	REC86617A20	REC98450A10	
		2	1980-87	5705532 - B238463	REC899883230	REC86617A20	REC98450A10	
		2	1988-94	B238464-OG044026	REC339-7452A19	REC86617A20	REC98450A10	
	JET	2	1994-97	OG044027-437999	REC18495A30	REC86617A20	REC98450A10	PH350-0003
		2	1994-97	OG044027-437999	REC18495A30	REC86617A20	REC98450A10	PH350-0003
	Sea Pro	2	1996-97	OG438000-OG760299	REC339-7452A19	REC86617A20	REC98450A10	PH350-0003
		2	1997-98	OG438000-OG760299		REC86617A20	REC98450A10	PH350-0003
25	XD	2	1979-87	5837437-B114230	REC899883230	REC86617A20	REC98450A10	
		2	1979-87	5705532 - OB238463	REC899883230	REC86617A20	REC98450A10	
		2	1979-87	5705532 - OB238463	REC339-7452A19	REC86617A20	REC98450A10	
		2	1988-93	OB238464-OG044365	REC339-7452A19	REC86617A20	REC98450A10	
	Jet 20	2	1994-97	OG044027-OG437999		REC86617A20	REC98450A10	PH350-0003
	MARATHON		1994-97	OG044027-437999	REC18495A30	REC86617A20	REC98450A10	PH350-0003
	SEA PRO	2	1994-97	OG044027-437999	REC18495A30	REC86617A20	REC98450A10	PH350-0003
	Sea Pro	2	1996-97	OG438000-OG760299	REC339-7452A19	REC86617A20	REC98450A10	PH350-0003
	4T / 4 Stroke / 4 Tempi (Man. Start) 16 Amp	2		-0G960499		REC398-852386T8		REC883072T
	4T / 4 Stroke / 4 Tempi (Elect. Start) 16 Amp	2		-0G960499		REC398-852387T9		REC883072T
30	Man.-Elec.		1998-99	OG590000 -OG760299			REC853960T	
	Man.-Elec.		1999-06	OG760300 -OT979999			REC853960T	
	JET	4	1989-97	C159200-OG589999	REC300-03107	REC398-5704A7	REC96452A4	PH350-0003
	4T / 4 Stroke / 4 Tempi (Man. Start) 16 Amp	3		-0G960499		REC398-852386T8		REC883072T
	4T / 4 Stroke / 4 Tempi (Elect. Start) 16 Amp	3		-0G960499		REC398-852387T9		REC883072T
35		2	1984-89	6445653-B393190	REC899883230	REC86617A20	REC98450A10	PH350-0003
		2	1984-89	6445653-B393190	REC339-7452A19	REC86617A20	REC98450A10	
40	402 Elect. Start.	2	1975-77	4117710-4860102	REC332-4911A8			PH350-0003
	Man. Start	2	1975-81	4117710-5823917	REC332-4911A8			
	Elect. Start	2	1978-81	4860103 - 5823917	REC332-4911A8			PH350-0003
	Elect. Start	2	1981-84	5823918-6052942	REC899883230	REC86617A20		PH350-0003
	Elect. Start	2	1981-84	6052943-6999999	REC899883230	REC86617A20		PH350-0003
	Man. Start	2	1981-84	5823918-6999999	REC899883230	REC86617A20		
40	Elect. Start	4	1989-91	C159200 - D055047	REC300-03107	REC398-5704A7	REC96452A4	PH350-0003
	Man. Start	4	1989-91	C159200 - D055047	REC300-03107	REC398-5704A7	REC96452A4	
	Elect. Start	4	1991-96	D055048-OG291031	REC300-03107	REC398-832074A4	REC96452A4	REC883072T
	Man. -Elec.		1998-05	OG760300 -OT979999			REC853960T	
		3	1997-99	OG531301-OG760300		PH400-0002		
	JET	4	1989-97	C159200 - OG589999	REC300-03107	REC398-5704A7	REC96452A4	PH350-0003
	4T / 4 Stroke / 4 Tempi (Man. Start) 16 Amp	3		-0G960499		REC398-852386T8		REC883072T
	4T / 4 Stroke / 4 Tempi (Elect. Start) 16 Amp	3		-0G960499		REC398-852387T9		REC883072T
45	Elect. Start	4	1981-89	5531630-B393190	REC300-03107	REC398-5704A7	REC96452A4	PH350-0003
	Man. Start	4	1981-89	5531630-B393190	REC300-03107		REC96452A4	
	JET	3	1991-99	D000750-OG589999	REC19052A8	REC398-832074A4		REC883072T
50	Elect. Start	4	1976-79	4357640-5531629	REC300-03107	REC398-5704A7	REC96452A4	PH350-0003
	Man. Start	4	1976-79	4357640-5531629	REC300-03107		REC96452A4	
	Elect. Start	4	1980-85	5531630-6586624	REC300-03107	REC398-5704A7	REC96452A4	PH350-0003
	Man. Start	4	1980-85	5531630-6586624	REC300-03107		REC96452A4	
		3	1984-90	6428681-D000749	REC300-01852	REC398-5704A7	REC96455A8	PH350-0003
		3	1991-99	D000750-OG589999	REC19052A8	REC398-832074A4		REC883072T
	Man. Start	3	1997-99	OG531301-OG760300		PH400-0002		
	Elect. Start	3	1997-00	OG531301-OG760300		PH400-0002		

HP	Modelo Model Modello	Cyl.	Año Year Anno	Serie Serial Seriale	Caja Negra Switch Centraline	Startor	Trigger	Regulador Regulator Regolatore
		3	1991-99	D000750-OG589999	REC19052A8	REC398-832074A4		REC883072T
55	Elect. Start	3	1996-98	G290585-OG589999	REC19052A8	REC398-832074A4		
	Man. Start	3	1996-98	G290585-OG589999	REC19052A8			
60		3	1984-90	6428681-D000749	REC300-01852	REC398-5704A7	REC96455A8	PH350-0003
		3	1991-97	D000750-OG589999	REC19052A8	REC398-832074A4		PH350-0003
	650	4	1967	2119749-2309310	REC332-2986A27			PH350-0003
		4	1969-71	2503991-3293183	REC332-2986A27			PH350-0003
65		3	1976-79	4382057-4571651	REC300-01852	REC398-5704A7	REC96455A8	PH350-0003
	Jet Elect Start	3	1994-96	D283222-OG437999	REC18495A26	REC398-832074A4		REC883072T
	Jet Man Start	3	1994-96	D283222-OG437999	REC18495A26			
		3	1977-87	4571652-A730815	REC300-01852	REC398-5704A7	REC96455A8	PH350-0003
70	9 Amp	3	1987-93	A996142 - D283221	REC300-01852	REC398-8778A29		PH350-0003
	16 Amp	3	1987-93	A996142 - D283221	REC300-01852	REC398-832074A4		REC883072T
		4	1984-88	6432901-B279480	REC300-03107		REC96455A8	PH350-0003
	9 Amp	3	1987-93	A996142 - D283221	REC300-01852	REC398-8778A29	REC99021A16	PH350-0003
75	16 Amp	3	1987-93	A996142 - D283221	REC300-01852	REC398-832074A4	REC99021A16	REC883072T
	Elect. Start	3	1994-96	D283222-OG437999	REC18495A26	REC398-832074A4	REC99021A16	REC883072T
	Man. Start	3	1994-96	D283222-OG437999	REC18495A26		REC99021A16	
		3	1996-00	OG438000-OG760299		PH400-0002		
	800	4	1969	2559001-2991033	REC332-2986A27			PH350-0003
	800	4	1970	3052381-3059820	REC332-2986A27			PH350-0003
	800	4	1971-72	3307347-3493912	REC332-2986A27			PH350-0003
	9 Amp	3	1987-93	A996142-D283221	REC300-01852	REC398-8778A29	REC99021A16	PH350-0003
80	16 Amp	3	1987-93	A996142-D283221	REC300-01852	REC398-832074A4	REC99021A16	PH350-0003
	JET	4	1994-97	D283222-OG437999	REC300-03107	REC398-832074A4	REC99021A6	PH350-0003
	JET	4	1996-06	0G438000-IB000001			REC854513T	
	850	4	1973-75	3493913-4366801	REC332-2986A27			PH350-0003
	850	4	1976-77	4366802-4831998	REC300-03107		REC96452A4	PH350-0003
	Inline		1978-79	845301-5299505	REC332-2986A27			PH350-0003
	Inline	6	1979-86	5299506 - B110053	REC300-01852	REC398-5454A17	REC96455A9	PH350-0003
	Elect. Start	3	1987-92	A996142 - C221999	REC300-01852	REC398-8778A29	REC96455A8	PH350-0003
90	Elect. Start	3	1993-96	C222000-OG437999	REC18495A26	REC398-832074A4	REC99021A16	REC883072T
	Man. Start	3	1994-96	D283222-OG437999	REC18495A26		REC99021A16	
		3	1996-99	OG438000-OG760299		PH400-0002		
	Sport Jet	3	1995	E021000-E095087	REC300-01852	REC398-8778A29		REC883072T
	Sport Jet	3	1995-96	E080400-E145579	REC18495A26	REC398-8778A29		REC883072T
95	950	6	1966-67	2101743-2318585	REC332-2986A27			PH350-0003
	XRSprtJet	3	1995-97	E141089 - E315900	REC18495A26	REC398-832074A4		REC883072T
	1000 Inline	6	1967-69	2641855-3253111	REC332-2986A27			
100		4	1988-93	B209468 - D283221	REC300-03107	REC398-8778A29	REC99021A6	REC883072T
	9 Amp	4	1994-96	D283222-OG437999	REC300-03107	REC398-8778A29	REC99021A6	REC883072T
	16 Amp	4	1994-96	D283222-OG437999	REC300-03107	REC398-832074A4	REC99021A6	REC883072T
105	JET	6	1992-95	D082000-OG201874	REC300-01852	PH400-0002	REC96455A9	REC883072T
	JET	6	1996-00	OG303046-OG840500	REC300-01852	PH400-0002	REC96455A9	REC883072T
110	1100 Inline	6	1967	2113898-2314955	REC332-2986A27			PH350-0003
	150SSInlin	6	1970-79	2836019-5314655	REC332-2986A27			PH350-0003
	Inline	6	1979-80	5314656-5600966	REC300-01852	REC398-5454A17	REC96455A9	PH350-0003
115	Inline	6	1980-82	5600967-6051525	REC300-01852	REC398-5454A17	REC96455A9	PH350-0003
	Inline	6	1982-89	6051526-C10000	REC300-01852	REC398-5454A17	REC96455A9	PH350-0003
	9 Amp	4	1989-93	C100000-D252460	REC300-03107	REC398-8778A29	REC99021A6	REC883072T
	16 Amp	4	1989-97	C100000-OG437999	REC300-03107	REC398-832074A4	REC99021A6	REC883072T
120	XRSprtJet	4	1995-97	E141089 - E315900		PH400-0002		REC883072T
	1250 Inline	6	1968-69	2314956-3253111	REC332-2986A27			PH350-0003
125	9 Amp	4	1994-96	D283222-OG437999	REC300-03107	REC398-8778A29	REC99021A6	REC883072T
	16 Amp	4	1994-96	D283222-OG437999	REC300-03107	REC398-832074A4	REC99021A6	REC883072T
	1350 Inline	6	1970-71	2839369-3293233	REC332-2986A27			PH350-0003
	V-135	6	1985-88	A904646-C100860	REC300-01852	REC398-5454A17	REC96455A9	PH350-0003
	V-135	6	1989-90	C100861-C239552	REC300-01852	REC398-9610A19	REC96455A9	
135	V-135 16 Amp	6	1990-91	C239553-D081999	REC300-01852	REC398-832074A4	REC96455A9	PH350-0003
	V- 135 40 Amp	6	1990-91	C239553-D081999	REC300-01852	REC398-9610A19	REC96455A9	
	V-135 40 Amp	6	1992-95	D082000-OG201874	REC300-01852	REC398-9610A19	REC96455A9	REC883072T
	V-135 40 Amp	6	1996-00	G303046-G840500	REC300-01852	REC398-9610A19	REC96455A9	REC883072T
	V-135	6	1900-01	OG960500-OT178499			CDI134-6456-18	
	1400 Inline	6	1972	3293234-3502805	REC332-2986A27			PH350-0003
	Inline	6	1978-79	4855153-5314655	REC332-2986A27			PH350-0003
	Inline	6	1979	5327663-5625107	REC300-01852	REC398-5454A17	REC96455A9	PH350-0003
140	140	6	1980	5625108-5669999	REC300-01852	REC398-5454A17	REC96455A9	PH350-0003
	Jet	6	1992-95	D082000-OG201874	REC300-01852	REC398-9610A19	REC96455A9	REC883072T
	Jet	6	1996-99	OG303046-OG760300	REC300-01852	REC398-9610A19	REC96455A9	REC883072T
	Jet	6	2000-01	OG960500-OT178499			CDI134-6456-18	

HP	Modelo / Model / Modello	Cyl.	Año / Year / Anno	Serie / Serial / Seriale	Caja Negra / Switch / Centraline	Startor	Trigger	Regulador / Regulator / Regolatore
	1500 Inline	6	1973-77	3502806-4868997	REC332-2986A27			
	XR2 Mag	6	1978-86	4868998-OA904645	REC300-01852		REC96455A9	PH350-0003
	V-135	6	1985-88	A904646-C100860	REC300-01852	REC398-5454A17	REC96455A9	PH350-0003
	V-150	6	1989-90	C100861-C239552	REC300-01852	REC398-9610A19	REC96455A9	
150	V-150 16 Amp	6	1990-91	C239553-D081999	REC300-01852	REC398-5454A17	REC96455A9	PH350-0003
	V-150 40 Amp	6	1990-91	C239553-D081999	REC300-01852	REC398-9610A19	REC96455A9	
	V-150 40 Amp	6	1992-95	D082000-OG201874	REC300-01852	REC398-9610A19	REC96455A9	REC883072T
	V-150 40 Amp	6	1996-00	OG303046-OG840500	REC300-01852	REC398-9610A19	REC96455A9	REC883072T
	V-150 2T	6	2000-05	OG960500-OT178499			CDI134-6456-18	
	Black Max	6	1976-79	4301235-5393736	REC300-01852	REC398-5454A17	REC96455A9	PH350-0003
	Black Max	6	1979-84	5593737-6618750	REC300-01852	REC398-5454A17	REC96455A9	PH350-0003
	V-175 9 Amp	6	1985-88	6618751-C100860	REC300-01852	REC398-5454A17	REC96455A9	PH350-0003
	V-175 15 Amp	6	1985-88	6618751-C100860	REC300-01852	REC398-5454A35	REC96455A9	PH350-0003
	V-175 40 Amp	6	1989-90	C100861-C239552	REC300-01852	REC398-9610A19	REC96455A9	
175	V-175 16 Amp	6	1990-91	OC239553-OD081999	REC300-01852	REC398-5454A35	REC96455A9	PH350-0003
	V-175 40 Amp	6	1990-91	OC239553-OD081999	REC300-01852	REC398-9610A19	REC96455A9	
	XRi 40Amp	6	1992-95	OD082000-OG201874	REC300-01852	REC398-9610A19	REC96455A9	REC883072T
	XRi 40Amp	6	1996-00	OG303046-OG840500	REC300-01852	REC398-9610A19	REC96455A9	REC883072T
	XR2 SptJet	6	1997-99	OE151580 -OE345000	REC18495A26		REC96455A9	REC883072T
	V-175 EFI 2T	6	2000-01	OG960500-OT178499			CDI134-6456-18	
	Black Max	6	1978-79	4839034 - 5363917	REC300-01852	REC398-5454A17	REC96455A9	PH350-0003
	Black Max	6	1979-81	5363918-6073191	REC300-01852	REC398-5454A17	REC96455A9	PH350-0003
	V-200 15 Amp	6	1982-90	6073192-C239553	REC300-01852	REC398-5454A17	REC96455A9	PH350-0003
	V-200 16 Amp	6	1985-90	6625221-C239553	REC300-01852	REC398-5454A17	REC96455A9	PH350-0003
	V-200 16 Amp	6	1989-95	C100861-OG201874	REC300-01852	REC398-5454A17	REC96455A9	PH350-0003
200	V-200 Xri 40Amp	6	1989-91	C100861-OG303045	REC300-01852	PH400-0002	REC96455A9	
	V-200 16 Amp	6	1992-99	D082000-OG201874	REC300-01852	REC398-5454A17	REC96455A9	REC883072T
	V-200 40 Amp	6	1989-91	OG201875-OG30345	REC300-01852	REC398-9610A19	REC96455A9	
	V-200 2T	6	2000-05	OG960500-OT178499			CDI134-6456-18	
	EFI	6	1992-99	D082000-OG840500	REC300-01852	REC398-9610A19	REC96455A9	REC883072T
	EFI	6	2000-05	OG960500-OT178499			CDI134-6456-18	
	V-200	6	1987-88	B117316-C100860	REC300-01852	REC398-5454A17	REC96455A9	PH350-0003
225	V-225	6	1981-93	5628028-D280812	REC300-01852	REC398-5454A17	REC96455A9	PH350-0003
250	2.5L 16 Ap	6	1989-94	C101891-D280900	REC300-01852	REC398-5454A17		PH350-0003
	2.5L 40 Ap	6	1989-94	C101891-D280900	REC300-01852	REC398-9610A19		
275	16 Amp	6	1989-94	C101891-D280900	REC300-01852	REC398-5454A17		PH350-0003
	40 Amp	6	1989-94	C101891-D280900	REC300-01852	REC398-9610A19		
300	3.4L	6	1980-87	5611648-A996135	REC300-01852	REC398-5454A17		PH350-0003

BOBINAS
COILS
BOBINE

BOBINA DE IGNICIÓN
COIL IGNITION
BOBINE INIEZIONE

Ref.	R.O.	Tiempos / Strokes / Tempi
REC823033	823033	2

MOTORES / ENGINES / MOTORI
2.5, 3, 3.3 HP



Ref.	R.O.	Tiempos / Strokes / Tempi
REC6E7-85570-19	95188T	

MOTORES / ENGINES / MOTORI
MARINER 8K, K40 HP (2 cyl)



Ref.	R.O.	Tiempos / Strokes / Tempi
PAF15-07000600	855685T	4

MOTORES / ENGINES / MOTORI
8 HP (BONDENSE)
9.9 HP (323 cc)
13.5 HP (inter.)
15 HP (4 T / 4 Strokes / 4 Tempi)



Ref.	R.O.	Tiempos / Strokes / Tempi
REC803844T01	339-803844T01	4

MOTORES / ENGINES / MOTORI
8, 9.9 HP (209 cc)

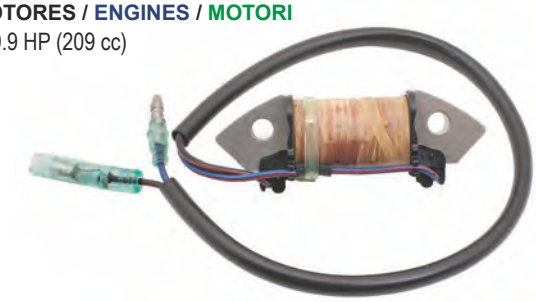

Ref.	R.O.	Tiempos / Strokes / Tempi
REC8M0071855	339-803706A1	2

MOTORES / ENGINES / MOTORI
9.9, 15, 18 HP (inter.) - 2 cyl



Ref.	R.O.	Tiempos / Strokes / Tempi
REC300-08309	339-7370A13	

MOTORES / ENGINES / MOTORI
10 - 220 hp
XR-4 / XR-6 / XR10



Ref.	R.O.	Tiempos / Strokes / Tempi
REC8M0047311	160643	2

MOTORES / ENGINES / MOTORI
25, 30 HP (inter) - 2 Cyl.



Ref.	R.O.	Tiempos / Strokes / Tempi
PAF25-05120000	339-859738T1	4

MOTORES / ENGINES / MOTORI
25 HP (2 cyl)
40, 50, 60 HP (4 cyl)



Ref.	R.O.	Tiempos / Strokes / Tempi
REC339-825101T	339-825101T	4

MOTORES / ENGINES / MOTORI
40 HP Italy
45 HP Bodensee
50 HP Bigfoot (4 T / 4 Strokes / 4 Tempi)



Ref.	R.O.	Tiempos / Strokes / Tempi
REC697-85570-00	97077M	

MOTORES / ENGINES / MOTORI
MARINER 55, 60, W48 (2 cyl)



Ref.	R.O.	Tiempos / Strokes / Tempi
REC398-173	398-173	2

MOTORES / ENGINES / MOTORI
60 - 250 HP



Ref.	R.O.	Tiempos / Strokes / Tempi
REC339-8M0077471	339-8M0077471, 339-879984A01, 339-879984T01, 339-879984T00	2



MOTORES / ENGINES / MOTORI

Modelo Model Modello	Series USA USA serial Serie USA	Series BEL BEL serial Serie BEL
75 DFI (3 Cyl) (1.5L)	0T980000 +	
80 Jet (3 Cyl) (1.5L)	1B586067 +	
90 DFI (3 Cyl) (1.5L)	0T801000 +	
115 DFI (3 Cyl) (1.5L)	0T801000 +	
115 Pro Xs (3 Cyl) (1.5L)	1B751825	
125 DFI (3 Cyl) (1.5L)	1B736885	
200 (DFI) 3.0L	1B504989 - 1B912785	
200 Pro Xs (DFI) 3.0L	1B504989 - 1B912785	
200 (DFI) 3.0L	1B504989 +	
200 (DFI) 3.0L	1B528615 +	
30 EFI (3 Cyl) (4 T / 4 Stroke / 4 Tempi)	0T409000 -1B226999 / 1C109093+	0P153500 - 0P400999
40 EFI (3 Cyl) (4 T / 4 Stroke / 4 Tempi)	0T409000 +	0PP153500 - 0PP515896
40 EFI (4 Cyl) (4 T / 4 Stroke / 4 Tempi)	0T409000 +	0P153500 +
50 EFI (4 Cyl) (4 T / 4 Stroke / 4 Tempi)	0T409000 +	0P153500 +
60 EFI (4 Cyl) (4 T / 4 Stroke / 4 Tempi)	0T409000 +	0P153500 +

Ref.	R.O.	Tiempos / Strokes / Tempi
REC339-880615T01	339-880615T01	4

MOTORES / ENGINES / MOTORI
75/80/90/100/115 HP EFI
135 - 400 Verado



Ref.	R.O.	Tiempos / Strokes / Tempi
REC339-8M0077473	339-8M0077473, 339-883778A01, 339-883778A02	2

MOTORES / ENGINES / MOTORI
110 Jet (2.5 L), 150 ProXS (2.5L) (1B690542+)
200 (3.0L DFI) DTS, 200 (DFI) 3.0L, 200 ProXS (DFI) 3.0L (1B504989+)
225 (3.0L DFI) DTS, 225 (DFI) 3.0L (1B504989+)
250 (DFI) 3.0L (1B528615+)



Ref.	R.O.	Tiempos / Strokes / Tempi
REC1463-9382	32193A2, 806529A1	2

MOTORES / ENGINES / MOTORI
Usar con resistencia externa.
Use external resistor.
Utilizzare con resistenza esterna.
800 (6 cyl)

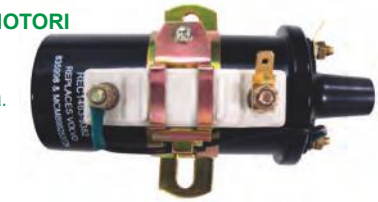

Ref.	R.O.	Tiempos / Strokes / Tempi
REC300-08310	339-85699A1	2

MOTORES / ENGINES / MOTORI

200 DFI, 225DFI, V135DFI (2.5L),
V150DFI (2.5L)
3.0 DFI



BOBINA DE CARGA
COIL CHARGER
BOBINE DI CARICA

Ref.	R.O.	Tiempos / Strokes / Tempi
REC803702	803702T	2

MOTORES / ENGINES / MOTORI

9.9, 15, 18, 25, 30 HP (intern) (2 cyl)



Ref.	R.O.	Tiempos / Strokes / Tempi
PAF8-05090000W	855944T01	4

MOTORES / ENGINES / MOTORI

8, 9.9HP (209cc)

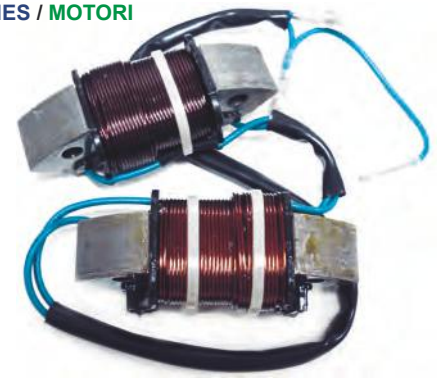

BOBINA DE EXCITACIÓN
COIL EXCITER
BOBINE LUCE

Ref.	R.O.	Tiempos / Strokes / Tempi
REC16058	16058T	2

MOTORES / ENGINES / MOTORI

4, 5 HP - 1cyl.



Ref.	R.O.	Tiempos / Strokes / Tempi
PAF8-05000300	803844T01	4

MOTORES / ENGINES / MOTORI

8, 9.9HP (209cc)



MÓDULOS Y LIMITADORES
MODULES & LIMITATORS
MODULI E LIMITATORI

MODULO ALARMA ACEITE
OIL WARNING MODULE
MODULO DI ALLARME OLIO

Ref.	R.O.
REC14857A16	14857A10, A16

MOTORES / ENGINES / MOTORI

30 Jet, 40, 45 Jet, 50, 55, 60 HP
(3 & 4 cyl)



MÓDULO CMD
CMD MODULE ASSY
MODULO CMD

Ref.	R.O.	Tiempos / Strokes / Tempi
REC827509A10	827509A10,T7	2

MOTORES / ENGINES / MOTORI

30 - 250 HP (1997+)
(3 & 4 cyl)



LIMITADOR R.P.M.
R.P.M. LIMITER
LIMITATORE R.P.M.

Ref.	R.O.
REC821889A50	821889A9, A22, A29, A34, A38, A40, A42, A46, A50, A51

MOTORES / ENGINES / MOTORI

5.200 r.p.m.



SENSORES
SENDERS
SENSORE

SENSOR DE PICADO
KNOCK SENDERS
SENSORE ANTIDETONAZIONE

Ref.	R.O.
REC8M6000623	

MOTORES / ENGINES / MOTORI

V-135 - V-175 DFI (2.5 L)
110 JET (2.5 L)
175 PRO XS (2.5 L)



SENSOR POSICIÓN CIGÜEÑAL
POSITION CRANCKSHAFT SENDER
SENSORE POSICIONE ALBERO

Ref.	R.O.	Tiempos / Strokes / Tempi
REC16066004	16066004	4

MOTORES / ENGINES / MOTORI
8 HP (209 cc)
9.9 HP (209 cc)

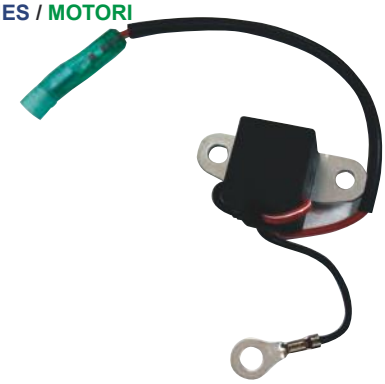

SENSOR PRESIÓN ACEITE
OIL PRESURE SENSOR
SENSORE PRESIONE OLIO

Ref.	R.O.	Tiempos / Strokes / Tempi
PAF15-07010100	87-803538	4

MOTORES / ENGINES / MOTORI
4-25 HP



SENSOR TEMPERATURA
TEMPERATURE SENDER
SENSORE TEMPERATURA

Ref.	R.O.	Rosca / Thread / Passo
REC12415	12415	1/8"-27NPT

MOTORES / ENGINES / MOTORI
30 Jet
40 / 100 / 115 (4 cyl)
40 / 50 / 60 /70 / 75 / 80 / 90 (3 cyl)
300 (3.4L)
v-50 Work / XR-2
V-135 - V-200



SENSOR MAP
MAP SENDERS
SENSORE MAP

Ref.	R.O.
REC854445	854445

MOTORES / ENGINES / MOTORI
100 EFI, 115 EFI, 90 EFI (4 T / 4 Strokes / 4 Tempi)
90, 115 DFI (3 Cyl.) 1.5 L
200 DFI (3 Cyl.) 1.5 L
200 (3.0 L DFI) (EFI) (DTS)
225 (3.0 L DFI) (EFI) (DTS) Seapro
250 (3.0 L EFI) (DFI)
40, 30 EFI (3 Cyl.) (4 T / 4 Strokes / 4 Tempi)
40, 50, 60 EFI (4 Cyl.) (4 T / 4 Strokes / 4 Tempi)
75 DFI (3 Cyl.) (1.5 L)
75, 80 EFI (4 T / 4 Strokes / 4 Tempi)
V-115 - V-175 DFI (2.5 L)
V-150 - V-200 EFI (2.5 L)



LLAVES DE ARRANQUE
IGNITION STARTER SWITCHES
CHIAVE DI AVVIAMENTO

Ref.	R.O. OEM	Terminales Terminals Terminali	Posiciones Positions Posizione	Envase Pack Qnt
MP41070	87-17009A2, 87-17009A5	6	3	1 x blister
MP41000	87-88107A5	6	3	1 x blister

MP41070
Llave de arranque de 3 posiciones con retroceso, Off-Contacto-Arranque (Choke). Fabricada en poliéster anticorrosión. Terminales: 6 cables.
3 positions, Off-Run-Start. 6 Wires.
Magneto
Chiave di avviamento a 3 posizioni con ritorno: Off-Contatto-Avviamento. In poliestere anticorrosione. Terminali: 6 cavi.



MP41000
Llave de arranque de 3 posiciones con retroceso, Off-Contacto-Arranque (Choke). Fabricada en poliéster anticorrosión. Terminales: 6 tornilllos.
3 positions, Off-Run-Start. 6 screws.
Magneto.
Chiave di avviamento a 3 posizioni con ritorno: Off-Contatto-Avviamento. In poliestere anticorrosione. Terminali: 6 viti.



INTERRUPTORES
CUT OFF SWITCHES
INTERRUTORI

DESCONECTADOR DE SEGURIDAD
IGNITION KILL SWITCH
INTERRUTTORE DI SICUREZZA

Ref.	R.O. OEM	Envase Pack Qnt
REC200		1 x blister
REC688-82575-01	87-97682M	1 x blister
REC6E9-82575-02	87-97757M	1 x blister
REC6A0-82550-01	87-93102M	1 x blister



REC200

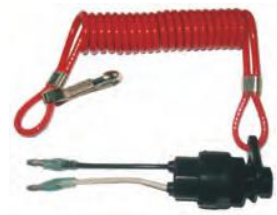

REC688-82575-01



REC6E9-82575-02



REC6A0-82550-01

Ref.	R.O. OEM	Envase Pack Qnt
REC87-823609A17	87-823609A17	1 x blister

MOTORES / ENGINES / MOTORI
6 - 25 HP



Ref.	Características / Features / Caractteristiche	Envase / Pack / Qnt
REC40970	Conjunto completo / Complete kit / Kit completo	1 x blister
REC40990	Cuerda tirador recambio / Spare / Corda tirante ricambio	1 x blister
GS11290	Conjunto completo / Complete kit / Kit completo	1 x blister
GS11291	Cuerda tirador recambio / Spare / Corda tirante ricambio	1 x blister
GS11292	Kit completo / Complete kit / Kit completo	1 x blister

Interruptor de encendido para todo tipo de motores fueraborda o intraborda.
Emergency and stop switch for inboard or outboards.
Interruttore di accensione per tutti i tipi di motori entrobordo e fuoribordo.

RECmar® GOLDENSHIP



REC40970- REC40990



GS11290 - GS11291



GOLDENSHIP
GS11292

KIT LLAVES
KILL SWITCH KEYS
KIT CHIAVI

Ref.	Envase / Pack / Qnt
GS11294	1 x blister

GOLDENSHIP
Kit de 8 llaves de recambio para:
Kit of 8 spare keys for:
Kit da 8 chiavi di ricambio per:
J/E - OMC - Mercury - Yamaha - Honda -Suzuki - Tohatsu.



PLATINOS Y CONDENSADORES
POINTS & CONDENSERS
PUNTINE E CONDENSATORE

PLATINOS
POINTS
PUNTINE

Ref.	R.O.
REC398-174	398-174

MOTORES / ENGINES / MOTORI
60 / 100 / 110 / 150 / 200 / 250



Ref.	R.O.
REC398-2202	398-2202

MOTORES / ENGINES / MOTORI
39, 40 HP (1 cyl)
60 / 75 / 110 / 350



Ref.	R.O.
REC394-1100A3	394-1100A3

MOTORES / ENGINES / MOTORI
300 / 350



CONDENSADORES
CONDENSER
CONDENSATORI

Ref.	R.O.
REC394-1130A1	394-1130A1

MOTORES / ENGINES / MOTORI
500



Ref.	R.O.
REC398-693	398-693

MOTORES / ENGINES / MOTORI
60 / 100 / 110 / 150 / 200 / 250



KITS

Ref.	Platino / Point / Puntino	Condensador / Condenser / Condensatore
REC18-5007	398-174	398-693
REC18-5012	394-1100A3	394-1130A1

JUNTAS DISTRIBUIDOR
DISTRIBUTOR GASKET
GUARNIZIONE DISTRIBUTORE

Ref.	R.O.
REC27-25725	27-25725

MOTORES / ENGINES / MOTORI
40-65 HP



Ref.	R.O.
REC27-47190	27-47190

MOTORES / ENGINES / MOTORI
500
650 (4 cyl) (1970-75)



Ref.	R.O.
REC27-46351	27-46351

MOTORES / ENGINES / MOTORI
650 (4 cyl)
950 (6 cyl)



BUJÍAS
SPARK
CANDELE

4 TIEMPOS STROKES — MERCURY

Modelo Model Modello	Tiempos Strokes Tempi	HP	Años Years Anni	Ref. NGK	Ref. NGK IRIDIUM	Ref. CHAMPION
2.5 HP 85cc 1 cyl	4	2.5	2006-11	NGKDCPR6E		CHARA8HC
3.5 HP 85cc 1cyl	4	3.5	2006-11	NGKDCPR6E	NGKDCPR6EIX	CHARA8HC
4 HP 123cc 1 cyl	4	4	2000-11	NGKDCPR6E	NGKDCPR6EIX	CHARA8HC
5 HP 123 cc 1 cyl	4	5	2000-11	NGKDCPR6E	NGKDCPR6EIX	CHARA8HC
6 HP 123cc 1 cyl	4	6	2000-11	NGKDCPR6E	NGKDCPR6EIX	CHARA8HC
8 HP 208cc 2 cyl	4	8	2005-11	NGKDCPR6E	NGKDCPR6EIX	CHARA8HC
9.9	4	9.9	1999-02	NGKDPR6EA-9		CHARA8HC
9.9	4	9.9	1995-98	NGKCR6HS		
9.9 HP, Bigfoot, Prockicker 2008cc 2cyl	4	9.9	2001-11	NGKDCPR6E	NGKDCPR6EIX	CHARA8HC
15 Bigfoot	4	15	1998-06	NGKDPR6EA-9		CHARA8HC
15 HP, Prokicker, Bigfoot 351cc 2cyl	4	15	2007-11	NGKDCPR6E	NGKDCPR6EIX	CHARA8HC
20HP 351cc 2 cyl	4	20	2008-11	NGKDCPR6E	NGKDCPR6EIX	CHARA8HC
25	4	25	1998-05	NGKDPR6EA-9		CHARA8HC
25 EFI 526cc 3cyl	4	25	2006-11	NGKDCPR6E	NGKDCPR6EIX	CHARA8HC
30, 30 EFI 526cc, 3 cyl	4	30	1999-11	NGKDPR6EA-9		CHARA8HC
40, Big Foot 4cyl	4	40	2001-06	NGKDPR6EA-9		CHARA8HC
40 EFI, Bigfoot 995cc 4 cyl	4	40	2007-11	NGKDCPR6E	NGKDCPR6EIX	CHARA8HC
45 Bodensee 4 cyl	4	45	1995-02	NGKDPR6EA-9		CHARA8HC
50, Bigfoot 4cyl	4	50	1995-00	NGKDPR6EA-9		CHARA8HC
50 EFI, Bigfoot 995cc 4cyl	4	50	2006-11	NGKDCPR6E	NGKDCPR6EIX	CHARA8HC
60 EFI, Bigfoot 995cc 4 cyl	4	60	2001-11	NGKDPR6EA-9		CHARA8HC
75 EFI 1.7L 4cyl	4	75	2000-11		NGKLFR5A-11	
90 EFI 1.7L 4 cyl	4	90	2000-11		NGKLFR5A-11	
150 Verado 1.7L 4cyl Supercharged	4	150	2006-11		NGKLFR5A-11	
250 Verado, Pro Four Stroke 2.6L Supercharged	4	250	2004-11		NGKLFR5A-11	
275 Verado 6 cyl Supercharged	4	275	2004-10		NGKLFR5A-11	
300 Verado, Pro FourStroke 2.6L 6cyl Supecharged	4	300	2008-11		NGKLFR5A-11	

2 TIEMPOS STROKES — MERCURY

Modelo Model Modello	Tiempos Strokes Tempi	HP	Años Years Anni	Ref. NGK	Ref. NGK IRIDIUM	Ref. CHAMPION
Classic 1 cyl	2	2.5	1993-05	NGKBP6HS		CHAL87YCC
2.5 EFI High Performance Engine	2	2.5	1994-97	NGKBUZHW		
3.0	2	3.0	1990-92	NGKBPR6HS-10		
3.3	2	3.3	1993-06	NGKBPR6HS-10		
3.5	2	3.5	1983-85	NGKBP6HS		CHAL87YCC
3.6	2	3.6	1980-82	NGKBP7HS-10		CHAL82YC
39	2	3.9	1967-68	NGKBR5HS		CHAL90C
39	2	3.9	1964-66	NGKBR6S		CHARJ8C
Classic 1 cyl	2	4	1988-05	NGKBPR7HS-10		CHARL82YC
4.0	2	4	1986-87	NGKBUZHW-2		
4.0	2	4	1980-82	NGKBPR7HS		CHARL82YC
40 Gnat	2	4	1976-79	NGKBR6HS		CHARL86C
40	2	4	1970-74	NGKBUZHW-2		
40	2	4	1969	NGKBR5HS		CHAL90C
4.5	2	4.5	1985-75	NGKBUZHW-2		
Classic 1 cyl	2	5	1988-06	NGKBPR7HS-10		CHARL82YC
6.0	2	6	1986-03	NGKBPZ8HN-10		CHAQL78YC
60	2	6	1967-68	NGKBR6HS		CHARL86C
60	2	6	1963-66	NGKBR6S		CHARJ8C
75	2	7.5	1979-85	NGKB9HS-10		CHAL77JC4
75	2	7.5	1975-78	NGKBUZHW-2		
75	2	7.5	1970-73	NGKBUZHW-2		
75	2	7.5	1974	NGKBUZHW		
75	2	7.5	1969	NGKBR6HS		CHARL86C
8.0	2	8	2001-06	NGKBPZ8HN-10		CHAQL78YC
8.0 Bodensee	2	8	1995-06	NGKCR6HS		
8.0	2	8	1986-00	NGKBP8HN-10		
9.8	2	9.8	1979-85	NGKB9HS-10		CHAL77JC4
110	2	9.8	1970-73	NGKBUZHW-2		
110	2	9.8	1967-69	NGKBR7HS		CHARL82C
100, 110	2	9.8	1960-66	NGKBR6S		CHARJ8C
110	2	9.8	1974	NGKBUZHW		
110	2	9.8	1975-78	NGKBUZHW-2		
9.9	2	9.9	2001-06			
9.9	2	9.9	1995-00	NGKBP8HS-15		
9.9	2	9.9	1986-94	NGKBP8HN-10		
10 Sea Pro 2 cyl	2	10	2001-02			
10, XR10, Sea Pro 2cyl	2	10	1991-00	NGKBP8HS-15		
15 Sea Pro	2	15	2001-06			
15 Sea Pro	2	15	1989-00	NGKBP8HS-15		
150	2	15	1960-61	NGKBR6S		CHARJ8C
18, XD	2	18	1981-85	NGKBP8HN-10		
20, Jet, Sea Pro 2 cyl	2	20	2001-06	NGKBPZ8HN-10		CHAQL78YC
20, Jet 2cyl	2	20	1986-00	NGKBP8HN-10		
20, 200	2	20	1970-80	NGKBUZHW-2		
200	2	20	1967-69	NGKBR7HS		CHARL82C
200	2	20	1960-66	NGKBR6S		CHARJ8C
25	2	25	2001-06	NGKBPZ8HN-10		CHAQL78YC
25, XD, Sea Pro	2	25	1980-00	NGKBP8HN-10		
250	2	25	1962	NGKBR6S		CHARJ8C
30, Sea Pro, Jet 2cyl	2	30	2001-02	NGKBPZ8HN-10		CHAQL78YC
30, Sea Pro, Jet 2cyl	2	30	1995-00	NGKBP8HN-10		
30 3cyl	2	30	1995-97	NGKBUZHW-2		
300 4cyl	2	30	1960	NGKBR6S		CHARJ8C
35	2	35	1984-91	NGKBUZHW		
350	2	35	1967-69	NGKBR7HS		CHARL82C
350	2	35	1961-6			CHAJ6C
40, Sea Pro 2 cyl	2	40	2001-06	NGKBPZ8HN-10		CHAQL78YC
40 3 cyl	2	40	2001-02	NGKBPZ8HN-10		CHAQL78YC
40 3 cyl	2	40	1998-00	NGKBP8HN-10		
40, Sea Pro 2 cyl	2	40	1995-00	NGKBP8HN-10		
40 4cyl	2	40	1988-97	NGKBUZHW-2		
40, 400, 402 2 cyl	2	40	1970-83	NGKBUZHW		
400	2	40	1960-61	NGKBR6S		CHARJ8C
40HP, EFI 747cc 3cyl	2	40	2003-11	NGKDPR6EA-9		CHARA8HC
45 Jet 3 cyl	2	45	2001-02	NGKBPZ8HN-10		CHAQL78YC
45 Jet 3 cyl	2	45	1995-00	NGKBP8HN-10		

Modelo Model Modello	Tiempos Strokes Tempi	HP	Años Years Anni	Ref. NGK	Ref. NGK IRIDIUM	Ref. CHAMPION
45	2	45	1986-89	NGKBUZHW-2		
450	2	45	1962	NGKBR6S		CHARJ8C
50 3cyl	2	50	2001-06	NGKBPZ8HN-10		CHAQL78YC
50 3cyl	2	50	1991-00	NGKBP8HN-10		
50 3cyl	2	50	1986-90	NGKBUZHW		
50, 500	2	50	1978-85	NGKBUZHW-2		
500, 500SS	2	50	1967-77	NGKBUZHW		
500	2	50	1961-66			CHAJ6C
500M, 500S	2	50	1967	NGKBR7HS		CHARL82C
55, Sea Pro, 3cyl	2	55	2001-06	NGKBPZ8HN-10		CHAQL78YC
55, Sea Pro, 3cyl	2	55	1992-00	NGKBP8HN-10		
60, Sea Pro, 3cyl	2	60	2001-06	NGKBPZ8HN-10		CHAQL78YC
60, Sea Pro, Bigfoot, 3cyl	2	60	1991-00	NGKBP8HN-10		
60	2	60	1984-90	NGKBUZHW		
600 6 cyl	2	60	1960-61	NGKBR6S		CHARJ8C
65 Jet 3cyl	2	65	2001-02	NGKBUZHW-2		
65 Jet 3cyl	2	65	1995-00	NGKBUZHW-2		
650	2	65	1972-76	NGKBUZHW		
650S	2	65	1968-71	NGKBUZHW		
650	2	65	1963-66			CHAJ6C
650S	2	65	1967-68	NGKBR7HS		CHARL82C
70	2	70	1987-89	NGKBUZHW-2		
70	2	70	1979-83	NGKBUZHW		
700	2	70	1977-78	NGKBUZHW		
700 6cyl	2	70	1960-61	NGKBR6S		CHARJ8C
Walleye L4N4 Engine	2	75	2007	NGKLFR4AE		
75 3cyl	2	75	2001-06	NGKBUZHW-2		
75, Sea Pro 3cyl	2	75	1987-00	NGKBUZHW-2		
75XD 4cyl	2	75	1984-86	NGKBUZHW-2		
75 Jet 3cyl	2	75	2001-02	NGKBUZHW-2		
80 Jet 4cyl	2	80	1995-00	NGKBP8HN-10		
80 3cyl	2	80	1987-89	NGKBUZHW-2		
80 4cyl	2	80	1979-83	NGKBUZHW-2		
800	2	80	1970-72	NGKBUZHW		
800 6cyl	2	80	1960-61			CHAJ6C
80 Jet 4cyl	2	80	2001	NGKBPZ8HN-10		CHAQL78YC
800	2	80	1978	NGKBUZHW-2		
800	2	80	1969	NGKBUZHW		
850	2	85	1973-77	NGKBUZHW		
850 6cyl	2	85	1962-64			CHAJ6C
Walleye L4N4 Engine	2	90	2007	NGKLFR4AE		
90 3cyl	2	90	1999-06	NGKBUZHW-2		
90	2	90	1987-98	NGKBUZHW-2		
90, 900 6cyl	2	90	1978-86	NGKBUZHW		
900	2	90	1965			CHAJ6C
950SS	2	95	1966-67	NGKBUZHW		
950	2	95	1966	NGKBR7HS		CHARL82C
100	2	100	1988-99	NGKBP8HN-10		
1000BP, 1000SS	2	100	1968-69	NGKBUZHW		
1000	2	100	1962-64			CHAJ6C
105 Jet	2	105	1995-98	NGKBU8H		CHAQL6VC
1100SS	2	110	1966-67	NGKBUZHW		
1100	2	110	1966	NGKBR7HS		CHARL82C
Walleye L4N4 Engine	2	115	2007	NGKLFR4AE		
115 4cyl	2	115	2001-06	NGKBPZ8HN-10		CHAQL78YC
115 4cyl	2	115	1989-00	NGKBP8HN-10		
115, 1150	2	115	1970-88	NGKBUZHW		
125 4cyl	2	125	2001-06	NGKBPZ8HN-10		CHAQL78YC
125 4cyl	2	125	1994-00	NGKBP8HN-10		
1250 BP, SS	2	125	1968-69	NGKBUZHW		

Modelo Model Modello	Tiempos Strokes Tempi	HP	Años Years Anni	Ref. NGK	Ref. NGK IRIDIUM	Ref. CHAMPION
135 6 cyl	2	135	2000-02	NGKBPZ8HS-10		CHAQL78YC
135	2	135	1986-99	NGKBU8H		CHAQL6VC
1350	2	135	1970-71	NGKBUZHW		
140 Jet	2	140	1995-99	NGKBU8H		CHAQL6VC
140	2	140	1979-80	NGKBUZHW		
1400	2	140	1972-78	NGKBUZHW		
1400	2	140	1970-73	NGKBUZHW		
150, EFI, XRI, XR-2, XR-4 6cyl	2	150	2000-06	NGKBPZ8HS-10		CHAQL78YC
150, 1500	2	150	1978-02	NGKBU8H		CHAQL6VC
1500	2	150	1973-77	NGKBUZHW		
175 Xri	2	175	1991-02	NGKBU8H		CHAQL6VC
175, EFI MFI 6 cyl	2	175	2000-01	NGKBPZ8HS-10		CHAQL78YC
175, EFI	2	175	1979-99	NGKBU8H		CHAQL6VC
1750	2	175	1976-78	NGKBUZHW		
200, EFI, MFI, 6 cyl	2	200	2000-06	NGKBPZ8HS-10		CHAQL78YC
200 Xri	2	200	1989-02	NGKBUZ8H		CHAQL6VC
200, EFI	2	200	1979-99	NGKBU8H		CHAQL6VC
200 EFI 6 cyl	2	200	2006	NGKBR8HS		CHAQL78C
Duece High EFI 2.0L	2	200	1997	NGKBUZ8H		CHAQL6VC
F1 EFI 2.0L	2	200	1997	NGKBUZHW		
200 SST, EFI, SS, XR2 2.0L	2	200	1997	NGKBUZHW		
2000	2	200	1978	NGKBUZHW		
V-220 Laser	2	220	1987-88	NGKBUZ8H		CHAQL6VC
225 EFI, Sea Pro, Xri, Work 6 cyl	2	225	1995-06	NGKBR8HS	NGKBR8HIX	CHAQL78C
225, Work 3.0l V-6	2	225	1994-97	NGKBPZ8HN-10		CHAQL78YC
225	2	225	1980-81	NGKBU8H		CHAQL6VC
2.5L	2	245	1995-96	NGKBU8H		CHAQL6VC
250 Xri EFI 6 cyl	2	250	1995-06	NGKBR8HS	NGKBR8HIX	CHAQL78C
250 3.4L	2	250	1989-90	NGKBU8H		CHAQL6VC
2.5L Offshore	2	260	1995-97	NGKBU8H		CHAQL6VC
2.5L SS Drag EFI	2	265	1997	NGKBU8H		CHAQL6VC
275	2	275	1989-94	NGKBU8H		CHAQL6VC
EFI Sport, SS, Offshore 2.5L	2	280	2002	NGKBZ7HS-10		
3.4L	2	300	1984-88	NGKBU8H		CHAQL6VC
300 4cyl	2	300	1981-83	NGKBU8H		CHAQL6VC
2.5L S3000 EFI	2	300	1997	NGKBU8H		CHAQL6VC
2.5L Carb High Performance	2		1991-93	NGKBUZHW		
21.9 cu in 25SS Racing	2			NGKBUZHW		
49.9 cu in 650X Racing	2			NGKBUZHW		
99.9 cu in Twister 11-x Racing	2			NGKBUZHW		
10X High Performance	2			NGKBP8HS-10		
150 Magnum Pro Max Super	2			NGKBUZHW		
2.0L F1 Carb/EFI High Performance	2			NGKBUZHW		
2.4L Bass High Performance	2			NGKBUZHW		
2.4L EFI High Performance	2			NGKBUZHW		
2.4L Mod VP High Performance	2			NGKBUZHW		
200 Magnum EFI Pro Max Super	2			NGKBUZHW		
225 Magnum EFI Pro Max Super	2			NGKBUZHW		
25SS High Performance	2			NGKBUZHW-2		
25XS High Performance	2			NGKBUZHW		
44XS High Performance	2			NGKBUZHW-2		
SST 140 High Performance	2			NGKBUZHW		
XR-2 Magnum High Performance	2			NGKBUZHW		

4 TIEMPOS STROKES — MARINER

Modelo Model Modello	Tiempos Strokes Tempi	HP	Años Years Anni	Ref. NGK	Ref. NGK IRIDIUM	Ref. CHAMPION
2.5 Carb	4	2.5		NGKDCPR6E	NGKDCPR6EIX	
3.5 Carb	4	3.5		NGKDCPR6E	NGKDCPR6EIX	
4.0	4	4	1999-02	NGKDCPR6E	NGKDCPR6EIX	
5.0	4	5	1999-02	NGKDCPR6E	NGKDCPR6EIX	CHARA8HC
6.0	4	6	2000-02	NGKDCPR6E	NGKDCPR6EIX	CHARA8HC
8.0 209cc	4	8		NGKDCPR6E	NGKDCPR6EIX	CHARA8HC
9.9	4	9.9	1999-02	NGKDPR6EA-9		
9.9 Big Foot, Sail Power	4	9.9	1995-02	NGKCR6HS		
9.9 209cc	4	9.9		NGKDCPR6E	NGKDCPR6EIX	
15	4	15	1998-02	NGKDPR6EA-9		
15 Carb 2 Cyl	4	15		NGKDCPR6E	NGKDCPR6EIX	CHARA8HC
20 Carb 2 Cyl	4	20		NGKDCPR6E	NGKDCPR6EIX	CHARA8HC
25	4	25	1998-02	NGKDPR6EA-9		
25 EFI 3Cyl	4	25		NGKDCPR6E	NGKDCPR6EIX	CHARA8HC
30 2 Cyl	4	30	1999-02	NGKDPR6EA-9		
40 3 Cyl	4	40	1998-01	NGKCPR6EA-9		
50 4 Cyl	4	50	1995-01	NGKDPR6EA-9		
75	4	75	2000		NGKLFR5A-11	
90	4	90	2000		NGKLFR5A-11	
225 Super Magnum EFI		225	1997-99	NGKBU8H		CHAQL6VC

2 TIEMPOS STROKES — MARINER

Modelo Model Modello	Tiempos Strokes Tempi	HP	Años Years Anni	Ref. NGK	Ref. NGK IRIDIUM	Ref. CHAMPION
2A 646	2	2		NGKBR6HS		CHARL86C
2B 6A1 (M011600+)	2	2		NGKBR6HS		CHARL86C
2B 6A1 (-M011600)	2	2		NGKBR6HS		CHARL86C
2.5	2	2.5	1990-02	NGKBPR6HS-10		
3.3	2	3.3	1993-02	NGKBPR6HS-10		
3.5 642 (-M23740)	2	3.5		NGKBR7HS		
3.5 642 (M23741+)	2	3.5		NGKBR6HS		
3.5 642 (ML41691+)	2	3.5		NGKBR6HS		
3.5 642 (-ML41690)	2	3.5		NGKBR7HS		
4.0	2	4	1990-02	NGKBPR7HS-10		CHARL82YC
4A 6E0	2	4		NGKBR7HS		CHARL82C
5.0	2	5	1990-02	NGKBPR7HS-10		CHARL82YC
5A 661	2	5		NGKBR7HS		CHARL82C
5C 6E3	2	5		NGKBR7HS		CHARL82C
6.0	2	6	1992-02	NGKBP8HN-10		CHARL82YC
6B 678	2	6		NGKBR5HS		CHAL90C
6C 6H8	2	6		NGKB7HS-10		CHAL82C
6D 6H6	2	6		NGKB7HS-10		CHAL82C
8.0	2	8	1993-02	NGKBP8HN-10		CHARA8HC
K8 680	2	8	1991-00	NGKBR6HS		CHARL86C
8.0 Bondensee	2	8	1995-99	NGKCR6HS		CHARL86C
8	2	8	1987-92	NGKBP8HS-10		
8A 647 / 655	2	8		NGKBR6HS		CHARL86C
8B 677	2	8		NGKBR7HS		CHARL82C
8C 6G1	2	8		NGKB7HS-10		CHAL82C
8 Marathon / W8 / 8 677	2	8		NGKBR7HS		CHARL82C
9.9	2	9.9	1995-00	NGKBP8HS-15		
9.9	2	9.9	1987-94	NGKBP8HS-10		
9.9C 682 CDI	2	9.9		NGKB7HS-10		
9.9C 682	2	9.9		NGKBR7HS		
10 Marathon	2	10	1991-02	NGKBP8HS-15		
10 Magnum	2	10	1991-98	NGKBP8HS-15		
15 Marathon	2	15	1997-02	NGKBP8HS-15		
15 2Cyl	2	15	1989-02	NGKBP8HS-15		
15 K15 6K4	2	15	1984-00	NGKB7HS-10		CHAL82C
15 Marathon	2	15	1992-96	NGKBP8HN-10		
15 Marathon 684 CDI	2	15		NGKB7HS-10		CHARL82C
15 Marathon 684	2	15		NGKBR7HS		
15A 651	2	15		NGKBR7HS		
15C 684 CDI	2	15		NGKB7HS-10		
15C 684	2	15		NGKBR7HS		
K15 669	2	15		NGKBR6HS		
K15 6M7	2	15		NGKB7HS-10		CHAL82C
W15 662	2	15		NGKBR7HS		
W15 684	2	15		NGKB7HS-10		CHARL82C
20 Jet	2	20	1995-01	NGKBP8HN-10		
20A 653	2	20		NGKBR6HS		CHARL86C
20C 6A9	2	20		NGKBR7HS		CHARL82C
25 Marathon	2	25	1993-02	NGKBP8HN-10		
25	2	25	1985-01	NGKBP8HN-10		
K25 6A4	2	25	1997-00	NGKBR7HS		CHARL82C
25 Marathon 648, 694, 695	2	25		NGKBR7HS		CHARL82C
25A, 25B, 25C	2	25		NGKBR7HS		
W25, WS25	2	25		NGKBR7HS		
25	2	25	1992	NGKBU8H		CHAQL6VC
28 664	2	28		NGKBR7HS		CHARL82C
30 Marathon	2	30	1995-02	NGKBP8HN-10		
30 Jet 3 Cyl	2	30	1998-01	NGKBP8HN-10		
30	2	30	1995-00	NGKBP8HN-10		
30 Jet 3 Cyl	2	30	1995-97	NGKBUZHW-2		
30A 689	2	30	1992-94	NGKBR7HS		
W30 689A	2	30	1992-93	NGKBR7HS		
W30 698B	2	30	1992-93	NGKBR7HS		
30 Marathon 698B	2	30		NGKBR7HS		CHARL82C
40 Marathon, 2 Cyl.	2	40	1995-02	NGKBP8HN-10		
40 2, 3 Cyl	2	40	1998-01	NGKBP8HN-10		
K40 6F5 2 Cyl	2	40	1984-00	NGKBR7HS		
40, 2 Cyl	2	40	1989-97	NGKBUZHW-2		
40 Marathon 6F6	2	40	1985-94	NGKBR7HS		
40C 6E9, 40A 676A, 40B 675B, W40 676B	2	40	1981-94	NGKBR8HS	NGKBR8HIX	CHAQL78C
W40 6F6	2	40		NGKBR7HS		
45 Jet 3 Cyl	2	45	1995-01	NGKBP8HN-10		
45 Bodensee 4 Cyl	2	45	1995-98	NGKDPR6EA-9		
45 4 Cyl	2	45	1986-89	NGKBUZHW-2		
48 670	2	48		NGKBR7HS		
W48 670	2	48		NGKBR7HS		
50	2	50	1991-01	NGKBP8HN-10		
50 4 Cyl	2	50	1986-90	NGKBUZHW		
50 4 Cyl	2	50	1980-85	NGKBUZHW-2		
55 Marathon	2	55	1991-02	NGKBP8HN-10		
M55 663 (E004041+ / EL315379+)	2	55		NGKB8HS-10		CHAL78C
M55 663 (-E004040 / -EL315378)	2	55		NGKBR8HS		CHAQL78C
Marathon 55 663 / W55 663	2	55		NGKBR8HS	NGKBR8HIX	CHAQL78C
60 Marathon	2	60	1995-02			
60	2	60	1991-01			
60 Big Foot	2	60	1995-99	NGKBP8HN-10		
60 3 Cyl. 849cc	2	60	1984-90	NGKBUZHW		
675 (S000781+ / L302051+)	2	60		NGKB8HS-10		CHAL78C
60 6F0	2	60		NGKB8HS-10		
60 675 (-L302050 / -L000780)	2	60		NGKBR8HS	NGKBR8HIX	CHAQL78C
65 Jet	2	65	1995-01	NGKBUZHW-2		
70 3 Cyl.	2	70		NGKBUZHW		
75 Marathon	2	75	1987-91	NGKBUZHW-2		
75	2	75	1987-01	NGKBUZHW-2		
75 4 Cyl	2	75		NGKBUZHW-2		
80 Jet	2	80	1995-01	NGKBP8HN-10		
80 4 Cyl	2	80		NGKBUZHW-2		
85	2	85		NGKBUZHW-2		
90	2	90	1987-01	NGKBUZHW-2		
90	2	90		NGKBUZHW		
100	2	100	1988-99	NGKBP8HN-10		
105 Jet, 6 Cyl	2	105	1995-99	NGKBU8H		CHAQL6VC
115 4Cyl	2	115	1989-02	NGKBP8HN-10		
115	2	115	1977-88	NGKBUZHW		
EFI, 4 Cyl (1B366823+)	2	115		NGKLFR6A-11		
125	2	125	1994-04	NGKBP8HN-10		
135	2	135	2000-01	NGKBPZ8HS-10		CHAQL78YC
135	2	135	1986-99	NGKBU8H		
135 Marathon	2	135	1986-99	NGKBU8H		
135 Work	2	135	1986-93	NGKBU8H		CHAQL6VC
140 Jet	2	140	1995-99	NGKBU8H		CHAQL6VC
140 6 Cyl	2	140		NGKBUZHW		

Modelo / Model / Modello	Tiempos / Strokes / Tempi	HP	Años / Years / Anni	Ref. NGK	Ref. NGK IRIDIUM	Ref. CHAMPION
150	2	150	2000-01	NGKBPZ8HS-10		
150 EFI	2	150	2000-01	NGKBPZ8HS-10		CHAQL78YC
150 EFI	2	150	1997-99	NGKBU8H		CHAQL6VC
150	2	150	1979-99	NGKBU8H		
150 Magnum EFI	2	150	1993-97	NGKBU8H		CHAQL6VC
150 Magnum III	2	150	1992-97	NGKBU8H		
150 Magnum II	2	150	1988-91	NGKBU8H		
150 Magnum	2	150		NGKBU8H		
150 Work	2	150		NGKBU8H		
175 EFI	2	175	1998-99	NGKBU8H		
175	2	175	1978-98	NGKBU8H		
175 Magnum EFI	2	175	1991-97	NGKBU8H		CHAQL6VC
175 SKI	2	175	1989-94	NGKBU8H		CHAQL78YC
175 EFI	2	175	2000-01	NGKBPZ8HS-10		
200 EFI	2	200	1998-99	NGKBU8H		
200	2	200	1979-99	NGKBU8H		
200 Magnum EFI	2	200	1989-97	NGKBU8H		CHAQL6VC
200	2	200	2000	NGKBPZ8HS-10		
200 EFI	2	200	2000	NGKBPZ8HS-10		CHAQL78YC
200 Super Magnum EFI	2	200	1997	NGKBU8H		CHAQL6VC
200 Magnum EFI	2	220	1987-88	NGKBU8H		
3.0L Marathon	2	225	1994-01	NGKBU8H	NGKBR8HIX	
225 EFI/Carb	2	225	1995-04	NGKBU8H	NGKBR8HIX	
Magnum EFI	2	250	1996-01	NGKBR8HS	NGKBR8HIX	CHAQL78C
250 3.4L	2	250	1989-90	NGKBU8H		CHAQL6VC
2.5L EFI	2	260	1995-98	NGKBU8H		
2.5L EFI	2	265	1997	NGKBU8H		CHAQL6VC
275 3.4L	2	275	1991-94	NGKBU8H		CHAQL6VC
2.5L Drag EFI V6	2	300	1997-98	NGKBUZHW		

JUEGOS DE CABLES, ALTO RENDIMIENTO
HD SPARK PLUG WIRE SET
KIT CAVI CANDELE, ALTE PRESTAZIONI

Núcleo del cable de Kevlar de 8 mm antimagnético. Funda de silicona amarilla. Terminales bujías con muelle de acero inox. Terminal del distribuidor de cobre. Terminales bobina. Silicona resistente a altas temperaturas. Garantía de 5 años.
Antimagnetic Kevlar core. Yellow silicone boot & jacket. SS snaplock. Brass distributor terminal. Coil terminals. High resistant silicone. 5 year warranty.
Nucleo del cavo di Kevlar da 8 mm antimagnetico. Copertura di silicone gialla. Terminali candele con molle di acciaio inox. Terminale lato spinterogeno in rame. Terminale Bobine. Silicone resistente alle alte temperature. Garanzia di 5 anni.



Ref.	R.O.		
REC15-201		5”	12,7 cm
REC15-202		7”	17,78 cm
REC15-203	84-813715A1	9”	22,86 cm
REC15-204		12”	30,48 cm



Ref.	R.O.
REC84-813715A8	84-813715A8

MOTORES / ENGINES / MOTORI
100, 115, 125 & 80 JET(4 Cyl)



Ref.	R.O.	Cables / Wires / Cavi	Motor / Engine / Motore
REC84-881908T3	84-881908T	3	Mercury 30-40- EFI 3 cyl
REC84-881908T4	84-881908T	4	Mercury 40-60- EFI 4 cyl

MOTORES / ENGINES / MOTORI
4 Tiempo / Stroke / Tempi



KIT CABLES / CABLE KIT / KIT CAVI

Ref.	R.O.
REC84-813706A26	84-99215A26, 84-813706A26



PIPA PARA BUJÍAS
SPARK PLUG PIPE
GOMITO PER CANDELE

Ref.	R.O.
CHAPROSU	

Pipa de silicona para bujía con resistor. Conexión a prueba de agua.
Silicone pipe with resistor. Waterproof conection.
Gomito in silicone per candele. Connessione a prova di acqua.



SILEMBLOCKS

Ref.	R.O.	Arandelas / Washer / Rondella
REC78249	78249	3/4”

MOTORES / ENGINES / MOTORI
105-140 JET
MAGNUM II, III
V-135 - V-225
XR4 & XR6



Ref.	R.O.
PAF8-02000100	853771004
PAF8-00000002	803775006
PAF8-00000100	895167001

MOTORES / ENGINES / MOTORI
8, 9.8 HP (4T / 4 Strokes / 4 Tempi)
(209 cc)



DESPIECE MOTOR
ENGINE PARTS
PARTI DEL MOTORI

4 TIEMPOS 4 STROKES

8 (BODENSEE) (INT.)
9.9 (232 CC)
(SERIES OH000058+, OH017100-->OH017265)

Ref.	R.O.
REC6G8-W0001-A3	27-825847A95



Kit de juntas
Gasket set
Kit de guarnizione

Nº	Ref.	R.O. OEM	Descripción	Description	Descrizione	Cantidad Quanty Quantità
1	**PAF15-07000001**	17-825689	PIN	PIN	SPINOTTO	2
2	**REC6G8-41112-02**	27-825693	JUNTA	GASKET	GUARNIZIONE	2
3	**PAT15-04000010**	825212T02	TERMOSTATO	THERMOSTAT	TERMOSTATO	1
4	**PAF15-07010006**	8830591	PIPA	UNION TUBE 2	TUBO	1
5	**REC6G8-12414-A0**	27-825701	JUNTA TAPA TERMOSTATO	GASKET	GUARNIZIONE COPERCHIO TERMOSTATO	1
6		53-825038	CIERRE	LOCK	FERMO	4
7	**REC6G8-11181-A1**	27-8254821	JUNTA CULATA	HEAD CYLINDER GASKET 1	GUARNIZIONE TESTATA	1
8	**PAF15-04000005**	22-83326M	PIPA	HOSE NIPLE	TUBO	2
9	**CM6G8-11325-00**	825435	ÁNODO	ANODE	ANODO	1
10	**PAF15-07050004**	859578A1	TAPÓN ACEITE	OIL PLUG	TAPPO OLIO	1
11	**PAJASOF40431-025**	25-8M0052669	TÓRICA	O-RING	O-RING	1
12	**NGKCR6HS**	33-827859	BUJÍA	SPARK PLUG	CANDELA	2
13	**REC6G8-11351-A0**	27-825847	JUNTA BASE MOTOR	GASKET ENGINE	GUARNIZIONE MOTORE	1

8 / 9.9 HP (209CC) (P32500+)

Ref.	R.O.
REC3V1-87121-0	27-835427A04

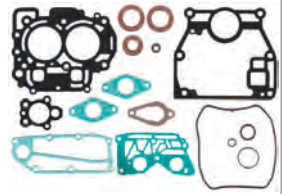

Kit de juntas
Gasket set
Kit de guarnizione

Nº	Ref.	R.O. OEM	Descripción	Description	Descrizione	Cantidad Quanty Quantità
1	**PAF8-05010002**	22-822644001	RACORD	NIPPLE	RACCORDO	1
2	**PAF8-05010004**	27-834952001	JUNTA ESCAPE	GASKET, EXHAUST COVER	GUARNIZIONE SCARICO	1
3	**PAF8-05010005**	27-853702005	JUNTA TERMOSTATO	GASKET, THERMOSTAT COVER	GUARNIZIONE TERMOSTATO	1
4	**PAF8-05000024**	35-851848003	TUBO	WATER PIPE	TUBO	1
5	**PAF8-00000200**	803512001	MEDIDOR NIVEL ACEITE	OIL LEVEL GAUGE	MISURATORE LIVELLO OLIO	1
6	**PAF8-05000800**	35-895152002	FILTRO ACEITE	OIL STRAINER	FILTRO OLIO	1
7	**PAF8-05000017**	32-895153	MANGUERA	HOSE	TUBO	1
8	**PAF8-05000025**	54-816311T	CLIP	HOOP	CLIP	2
9	**PAF8-00000004**	27-835427003	JUNTA BASE MOTOR	GASKET, ENGINE BASEMENT	GUARNIZIONE BASE MOTORE	1
10	**PAF8-00000003**	10-89514001	TORNILLO M8x35	BOLT M8x35	VITE M8x35	6
11	**PAF8-05010000**	878-815013T06	BLOQUE COMPLETO	CRANKCASSE ASSY	BLOCCO MOTORE	1
12	**RM855676002**	855676002	TERMOSTATO	THERMOSTAT	TERMOSTATO	1

8 / 9.9 HP (209CC) (P32500+)

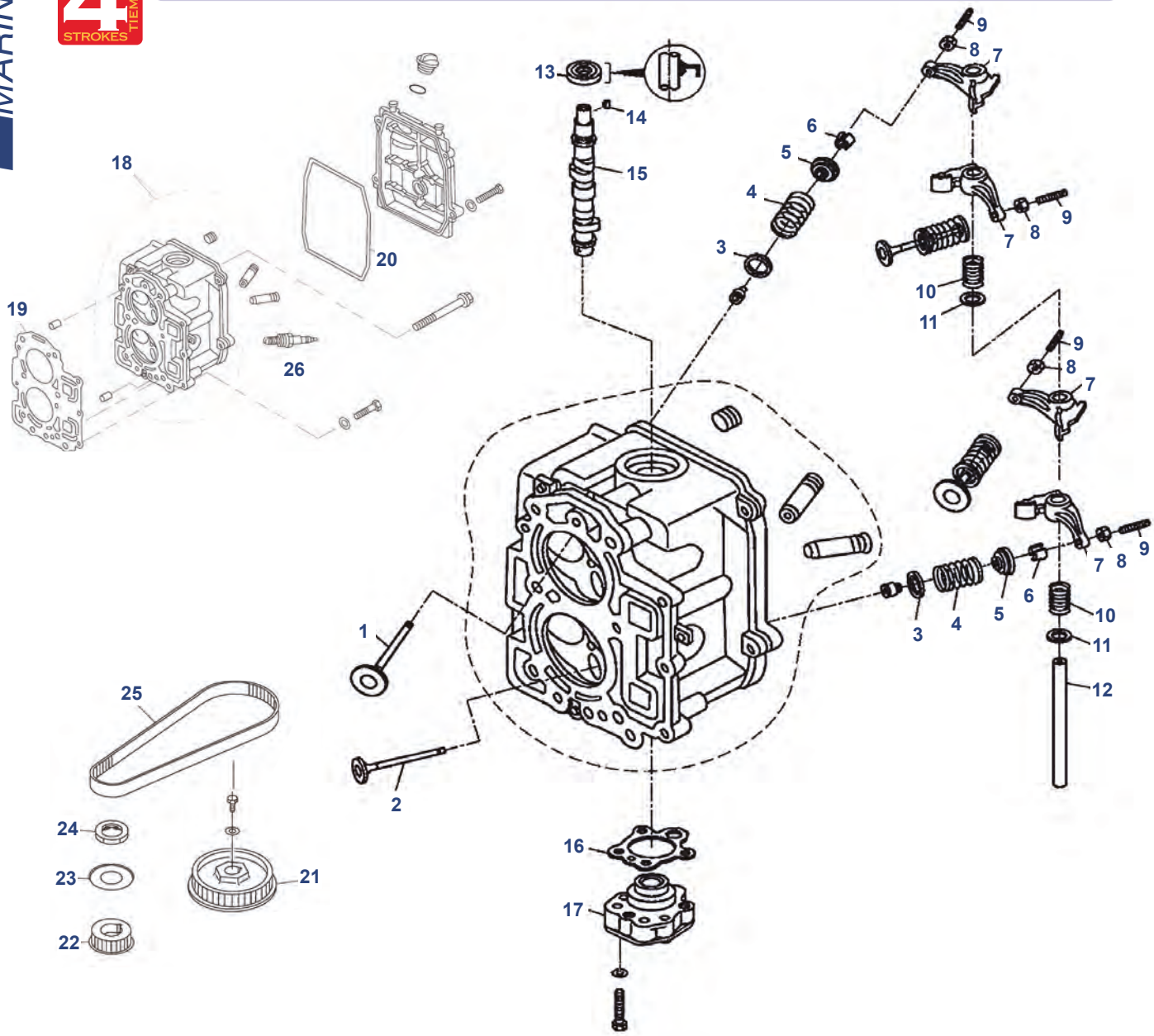

Nº	Ref.	R.O. OEM	Descripción	Description	Descrizione	Cantidad Quanty Quantità
1	**PAF8-05030001**	850838T01	VÁLVULA ADMISIÓN	VALVE INTAKE	VALVOLA ASPIRAZIONE	2
2	**PAF8-05030002**	850839T01	VÁLVULA ESCAPE	VALVE EXHAUST	VALVOLA SCARICO	2
3	**PAF8-05030004**	855959001	ASIENTO MUELLE	SEAL, VALVE SPRING	SIGILLO MOLLA	4
4	**PAF8-05030005**	24-803554005	MUELLE VÁLVULA	SPRING VALVE	VALVOLA MOLLA	4
5	**PAF8-05030006**	822650001	RESORTE VÁLVULA	RETAINER, VALVE SPRINGER	MOLLA VALVOLA	4
6	**PAF8-05030007**	28-803556	SEGURO	COTTER, VALVE	CHIUSURA DI SICUREZZA	8
7	**PAF8-05030200**	850841002	BALANCÍN	ROCKER	BILANCERE	4
8	**PAF15-07040304**	11-826150001	TUERCA	LOCK NUT	GHIERA	4
9	**PAF15-07040303**	10-825046001	TORNILLO AJUSTE	SCREW, VALVE ADJUSTING	VITE	4
10	**PAF8-05030009**	24-825452001	MUELLE	SPRING ROCKER	MOLLA	2
11	**PAF8-05030015**	12-895118001	ARANDELA	BUSHER, ROCKER SPRING	RONDELLA	2
12	**PAF8-005030010**	850842001	EJE	SHAFT ROCKER	ASSE	1
13	**PAF8-05030011**	26-825455001	RETÉN ACEITE	OIL SEAL 18x35x7.8 mm	PARAOLIO	1
14	**PAT3.6-04000006**	28-95229	CHAVETA	KEY	CHIAVETTA	1
15	**PAF8-05030008**	834956005	ÁRBOL DE LEVAS	CRAMSHAFT	ALBERO MOTORE	1
16	**PAF8-05030012**	27-853523001	JUNTA BOMBA ACEITE	OIL PUMP GASKET	GUARNIZIONE POMPA OLIO	1
17	**PAF8-05030300**	834967Y03	BOMBA ACEITE	OIL PUMP	POMPA OLIO	1
18	**PAF8-05030100**	900-835430T03	CULATA	CYLINDER HEAD ASSY	TESTATA	1
19	**PAF8-05000100**	27-850836001	JUNTA CULATA	CYLINDER HEAD GASKET	GUARNIZIONE TESTATA	1
20	**PAF8-05000002**	27-803508017	JUNTA TAPA CULATA	CYLINDER HEAD COVER GASKET	GUARNIZIONE COPERCHIO TESTATA	1
21	**PAF8-05030400**	43-834973001	POLEA	DRIVER PULLEY	PULEGGIA	1
22	**PAF8-05010014**	43-834955001	POLEA	DRIVER PULLEY	PULEGGIA	1
23	**PAF8-05010015**	895119	ARANDELA	BELT GUIDER	RONDELLA	1
24	**PAF8-05010016**	11-855679001	TUERCA	NUT	DADO	1
25	**PAF8-05000004**	57-895120	CORREA	TIMING BELT	CINGHIA DI DISTRIBUZIONE	1
26	**NGKDCPR6E**	33-803507	BUJÍA	SPARK PLUG	CANDELA	1

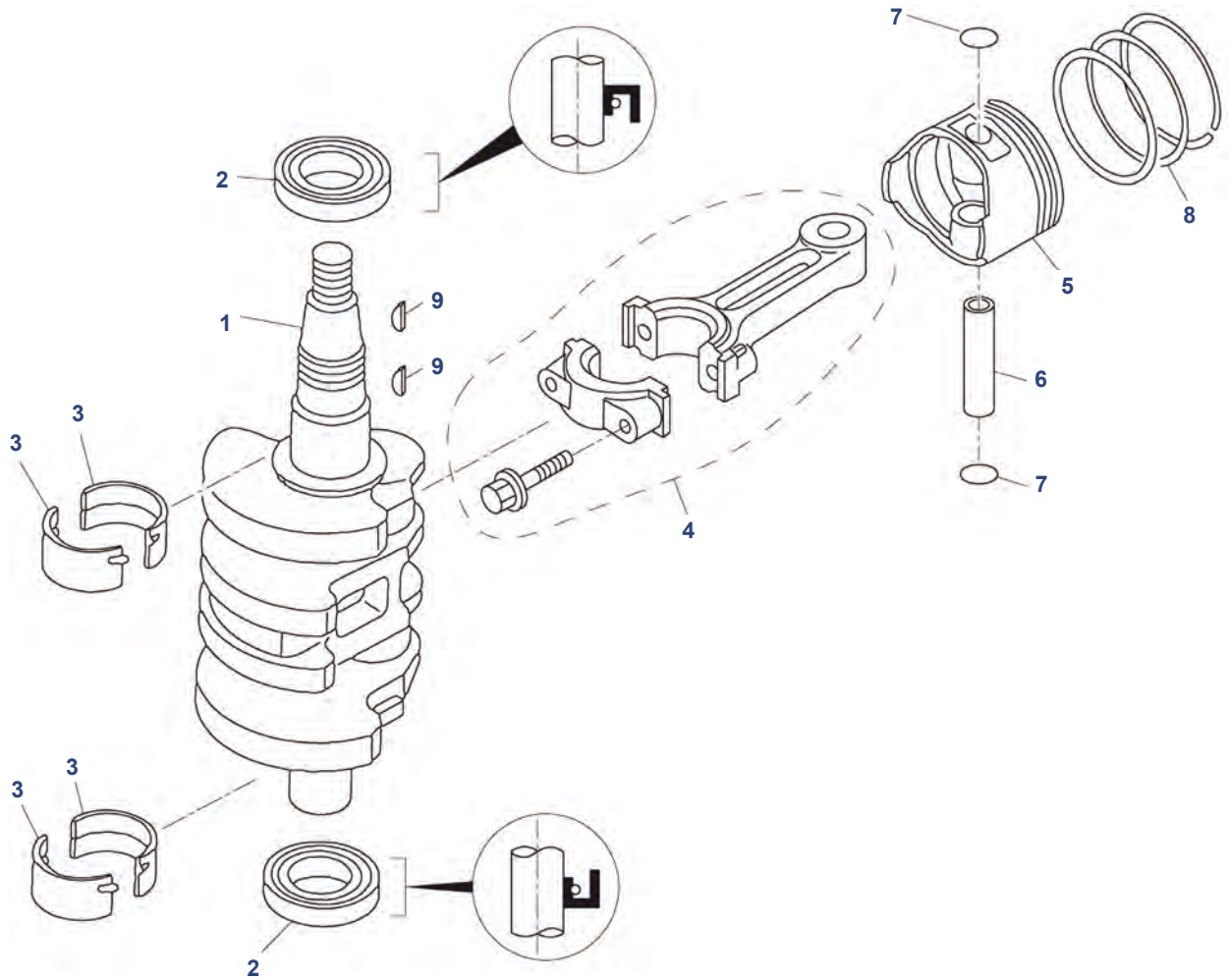

Nº	Ref.	R.O. OEM	Descripción	Description	Descrizione	Cantidad Quanty Quantità
1	**PAF8-05020001**	400-834957T01	CIGÜEÑAL	CRANK	ALBERO MOTORE	1
2	**PAF8-05010012**	26-855681001	RETÉN ACEITE	OIL SEAL	PARAOLIO	2
3	**PAF8-05010009**	31-834960T08	COJINETE	BUSH	BRONZINA	4
4	**PAF8-05020200**	600-834961002	BIELA	CONNENCTING ROD	BIELLA	2
5	**PAF8-05020101**	700-834963A02	PISTÓN	PISTON	PISTONE	2
6	**PAF8-05020105**	41-825713001	PIN	PIN, PISTON	SPINOTTO	2
7	**PAF15-07020005**	53-16057	CLIP	CIRCLIP	CLIP	4
8	**PAF8-05020102**	39-8M0055809	KIT AROS	RING SET	KIT FASCE	1
9	**PAF4-04000019**	28-825666001	CHAVETA	KEY	CHIAVETTA	2

8 (BONDESEE) (INT.) (OP086824 --> OP4000999)
9.9 (323 CC) (OP075166 --> OP400999)
13.5 (INT.) (OP134638+)
15 (9973100+)

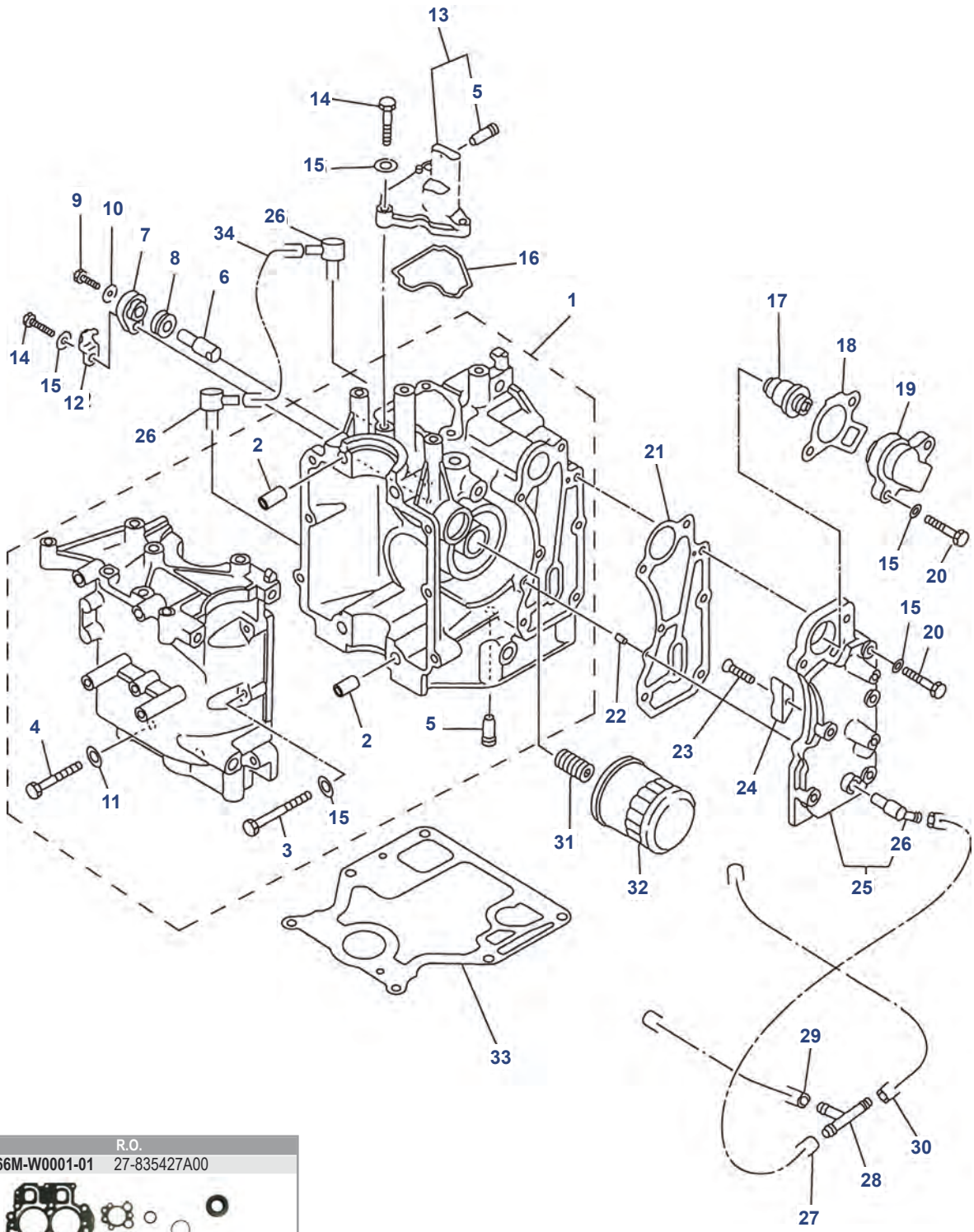

Ref.	R.O.
REC66M-W0001-01	27-835427A00

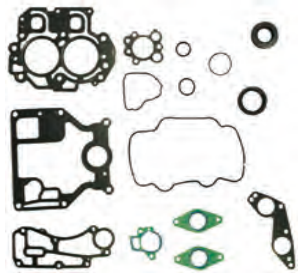

Kit juntas de motor
Power head gasket kit
Kit guarnizione motore

Nº	Ref.	R.O. OEM	Descripción	Description	Descrizione	Cantidad Quanty Quantità
1	**PAF15-07010000**	8M0055024	BLOQUE MOTOR	CRANKCASE ASSY	BLOCCO MOTORE	1
2	**PAF15-07000001**	17-825689	PIN	PIN, HOLLOW	SPINOTTO	2
3	**PAGB/T5783-2000**	10-43092M	TORNILLO	BOLT, HEXAGON	VITE	6
4	**PAGB/T5783-2000**	10-41884M	TORNILLO	BOLT, HEXAGON	VITE	4
5	**PAF15-07010006**	22-822644	PIPA	PIPE, JOINT	TUBO	2
6	**PAF15-07010008**	855678	ÁNODO	ANODE	ANODO	1
7	**PAF15-07010011**	855776	TAPA ÁNODO	COVER, ANODE	COPERTURA ANODO	1
8	**PAF15-07010009**	27-825040	ALOJAMIENTO ÁNODO	GROMMET, ANODE	ALLOGGIAMENTO ANODO	1
9	**PAGB/T5783-2000**	10-855778	TORNILLO	SCREW, PAN HEAD	VITE	1
10	**PAGB/T97.1-8**		ARANDELA	WASHER 5	RONDELLA	1
11	**PAGB/T97.1-8**		ARANDELA	WASHER 8	RONDELLA	4
12	**PAF15-07010012**	855779	PLACA ÁNODO	PLATE, ANODE	PIASTRA ANODO	1
13		834974	TAPA	COVER, BREATHER	COPERCHIO	1
14	**PAGB/T5783-2000**	10-8257021	TORNILLO	BOLT	VITE	4
15	**PAGB/T97.1-8**		ARANDELA	WASHER 6	RONDELLA	17
16	**PAF15-07010014**	26-850850	JUNTA TAPA	BREATHER GASKET	GUARNIZIONE COPERCHIO	1
17	**PAF15-07000031**	855676003	TERMOSTATO	THERMOSTAT	TERMOSTATO	1
18	**PAF15-07010022**	27-824853	JUNTA TERMOSTATO	GASKET, THERMOSTAT	GUARNIZIONE TERMOSTATO	1
19	**PAF15-07010021**	8250311	TAPA TERMOSTATO	COVER, THERMOSTAT	COPERCHIO TERMOSTATO	1
20	**PAGB/T5783-2000**	10-82500930	TORNILLO	BOLT	VITE	7
21	**PAF15-07010018**	27-834952002	JUNTA	GASKET, EXHAUST OUTER COVER	GUARNIZIONE	1
22	**PAF15-07000013**		PIN	O-RING	SPINOTTO	2
23	**PAGB/T5783-2000**		TORNILLO	SCREW	VITE	1
24	**PAF15-07010026**		ÁNODO	ANODE	ANODO	1
25	**PAF15-07010019**	834953T02	TAPA	OUTTER COVER, EXHAUST	COPERCHIO	1
26	**PAF15-04000005**	22-83326M	PIPA	WATER NIPPLE	TUBO	3
27	**PAF15-05000012**		TUBO	HOSE A	TUBO	1
28	**PAF15-05000011**		CONECTOR	THREE-WAY PIPE	CONNETTORE	1
29	**PAF15-05000013**		TUBO	HOSE B	TUBO	1
30	**PAF15-05000014**		TUBO	HOSE C	TUBO	1
31	**PAF15-07010003**	822625	TORNILLO	BOLT UNION	VITE	1
32	**REC35-822626Q03**	35-822626Q03	FILTRO ACEITE	OIL CLEANER	FILTRO DELL'OLIO	1
33	**PAF15-00000014**	27-8354272	JUNTA BASE MOTOR	GASKET, ENGINE	GUARNIZIONE BASE MOTORE	1
34	**PAF15-07010007**		TUBO	HOSE, RETURN OIL	TUBO	1

8 (BONDESEE) (INT.) (OP086824 --> OP4000999)
9.9 (323 CC) (OP075166 --> OP400999)
13.5 (INT.) (OP134638+)
15 (9973100+)

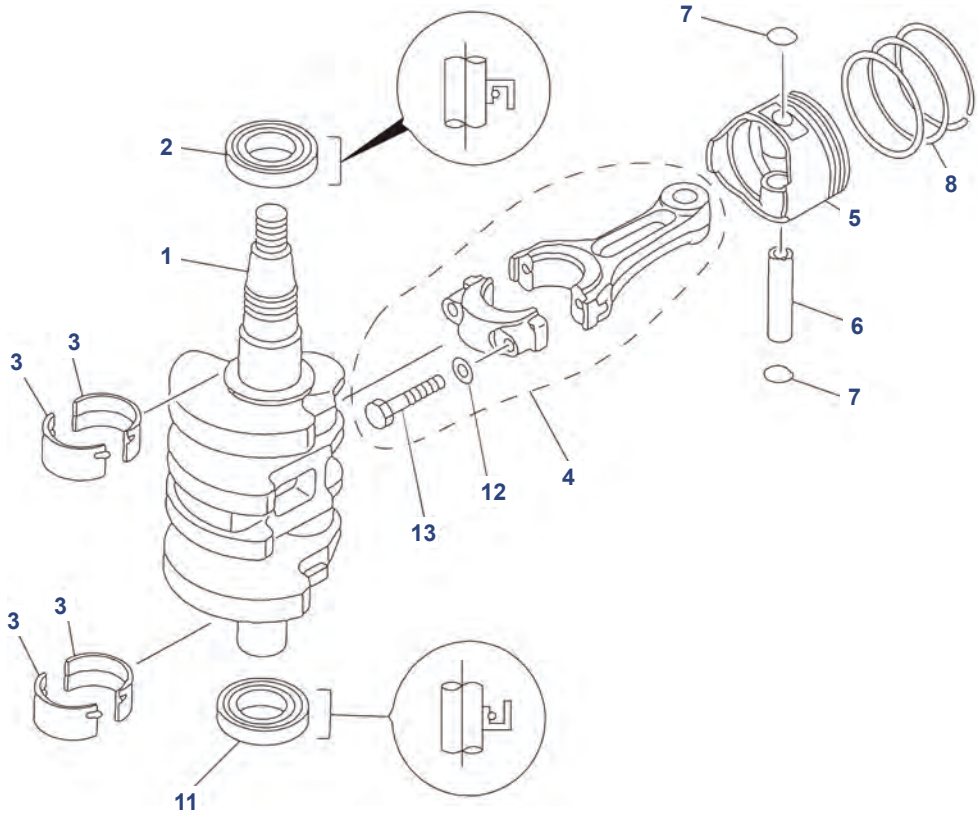

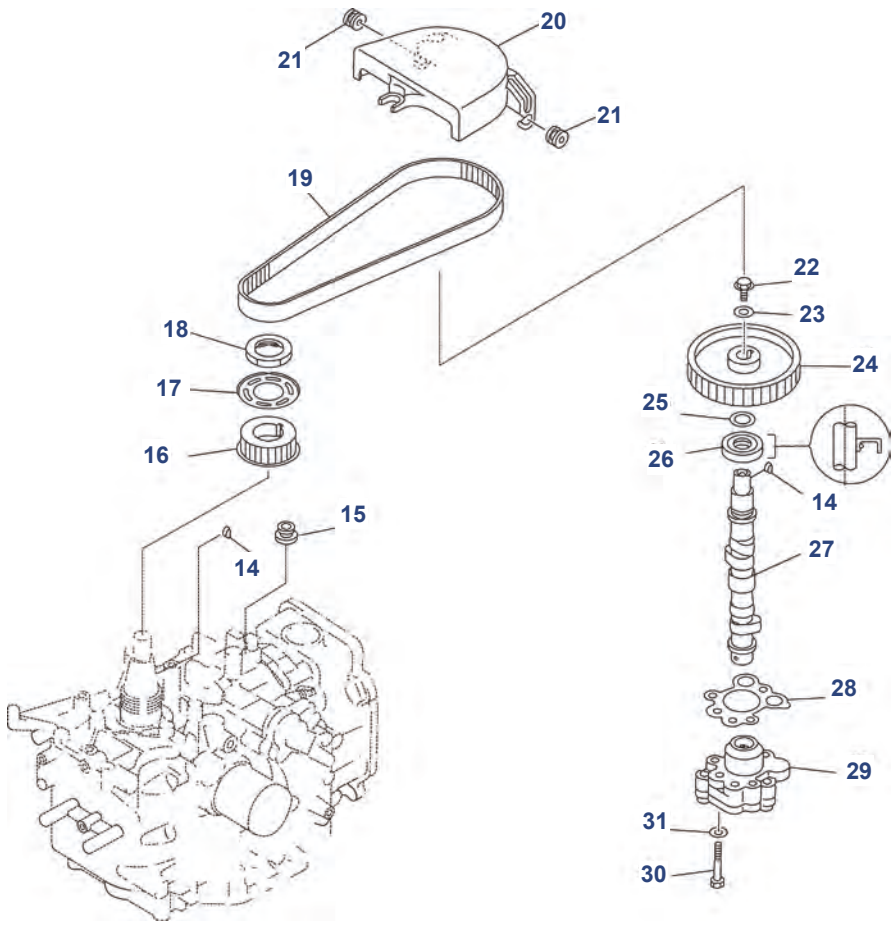

Nº	Ref.	R.O. OEM	Descripción	Description	Descrizione	Cantidad Quanty Quantità
1	**PAF15-07030000**	400-834957	CIGÜEÑAL	CRANK ASSY	ALBERO MOTORE	1
2	**PAF15-07030006**	26-855680	RETÉN	OIL SEAL A	PARAOLIO	1
3	**PAF15-07010024**	31-834960	COJINETE BANCADA	MAIN BEARING	CUSCINETTO	4
4	**PAF15-07020100**	600-834961A1	BIELA	ROD, CONNECTING	BIELLA	2
5	**PAF15-07020001**	700-834963	PISTÓN	PISTON	PISTONE	2
6	**PAF15-07020006**	41-825713	BULÓN	PIN, PISTON	BULLONE	2
7	**PAF15-07020005**	53-82343M	CLIP	CIRCLIP	CLIP	4
11	**PAF15-07030007**	26-855681	RETÉN	OIL SEAL B	PARAOLIO	1
12		12-855682	ARANDELA	WASHER, PLATE	RONDELLA	4
13		10-850844	TORNILLO	BOLT CONNECTING ROD	VITE	4
14	**PAGB/T1099-1979**	28-825666	CHAVETA	KEY, WOODRUFF	CHIAVETTA	1
15	**PAF15-07010027**	25-855690	GOMA	RUBBER RING B	GOMMINO	1
16	**PAF15-07030003**	43-834955	POLEA DENTADA	BELT PULLEY, TIMING	PULEGGIA	1
17	**PAF15-07030004**	12-850843	ARANDELA	WASHER	RONDELLA	1
18	**PAF15-07030005**	1-855679	TUERCA	NUT	GHIERA	1
19	**PAF15-07000002**	835392	CORREA DISTRIBUCIÓN	BELT TIMING	CINGHIA DISTRIBUZIONE	1
20	**PAF15-07000024**	855691	TAPA	COVER, DUST	COPERCHIO	1
21	**PAF15-07050003**	25-8527681	GOMA	RING RUBBER A	GOMMINO	2
22	**PAGB/T5783-2000**	10-826957M	TORNILLO	BOLT	VITE	1
23	**PAGB/T5287-6**	12-825498	ARANDELA	BIG WASHER	RONDELLA	1
24	**PAF15-07040018**	43-834973	POLEA	BELT PULLEY, DRIVEN	PULEGGIA	1
25	**PAF15-07040017**	12-82710M	ARANDELA	WASHER	RONDELLA	1
26	**PAF15-07040008**	26-825455	RETÉN	OIL SEAL	PARAOLIO	1
27	**PAF15-07040200**	834956	ÁRBOL DE LEVAS	CAMSHAFT ASSY	ALBERO MOTORE	2
28	**PAF15-07040016**	27-853523	JUNTA	MAT, AIRPROOF	GUARNIZIONE	1
29	**PAF15-07040500**	834967A1	BOMBA ACEITE	OIL PUMP ASSY	POMPA DELL'OLIO	1
30	**PAGB/T5783-2000**	10-850879	TORNILLO	BOLT	VITE	3
31	**PAGB/T97.1-8**		ARANDELA	WASHER	RONDELLA	3

8 (BONDESEE) (INT.) (OP086824 --> OP4000999)
9.9 (323 CC) (OP075166 --> OP400999)
13.5 (INT.) (OP134638+)
15 (9973100+)

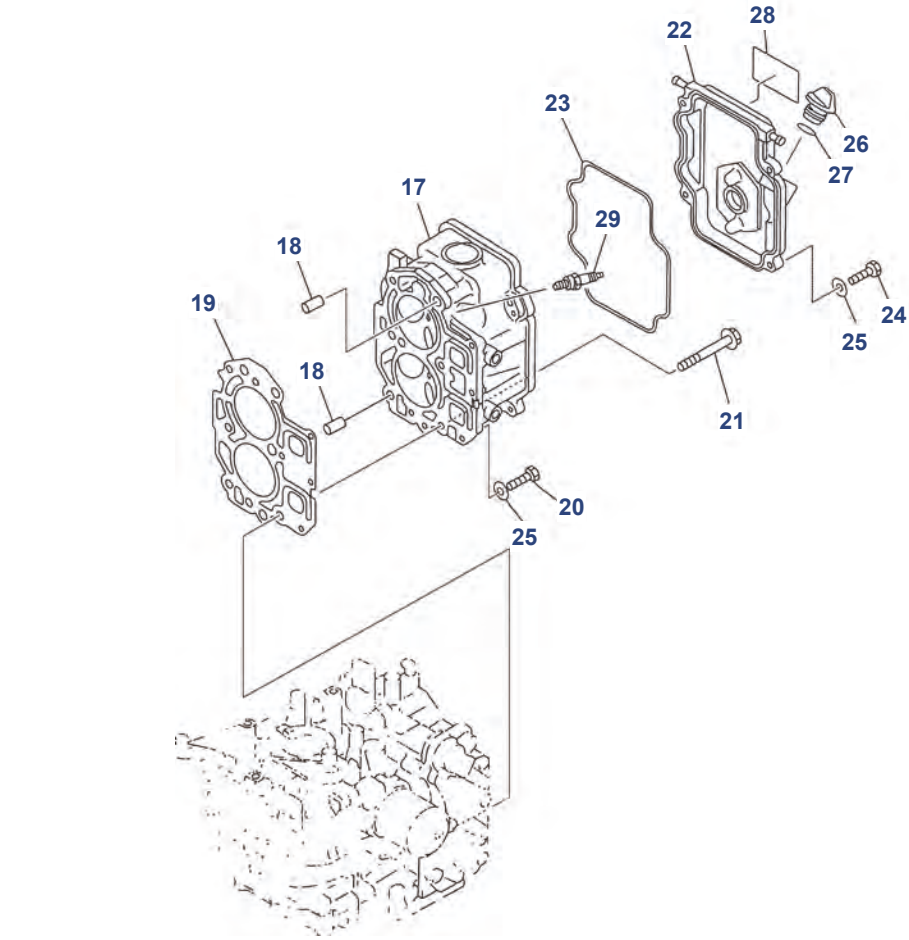

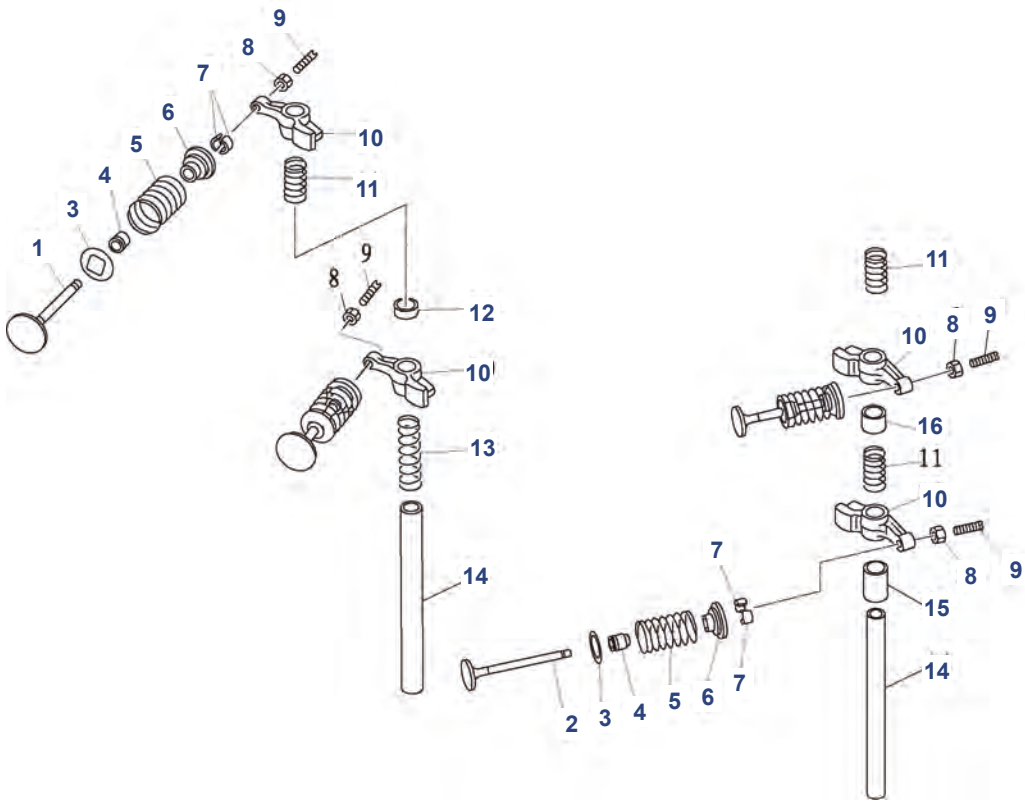

Nº	Ref.	R.O. OEM	Descripción	Description	Descrizione	Cantidad Quanty Quantità
1	**PAF15-07040001**	850838	VÁLVULA ADMISIÓN	VALVE, INTAKE	VALVOLA ASPIRAZIONE	2
2	**PAF15-07040002**	850839	VÁLVULA ESCAPE	VALVE, EXHAUST	VALVOLA SCARICO	2
3	**PAF15-07040004**	855959	ASIENTO MUELLE	SEAL, VALVE SPRING	MOLLA VALVOLA	4
4	**PAPS2700.04.03**	26-822647	RETÉN	SEAL, VALVESTEM	GUARNIZIONE	4
5	**PAF15-07040005**	24-850840	MUELLE	SPRING, VALVE	MOLLA	4
6	**PAF15-07050006**	822650	RESORTE	RETAINER, VALVE SPRING	FERMA VALVOLA	4
7	**PAF15-07040007**	28-822651	SEGURO VÁLVULA	COTTER, VALVE	VALVOLA DI SICUREZZA	8
8	**PAF15-07040304**	11-826150	TUERCA	LOCK NUT	GHIERA	4
9	**PAF15-07040303**	10-825046	REGULADOR	SCREW, VALVE ADJUSTING	REGOLATORE	4
10	**PAF15-07040301**	825451	BALANCÍN	ROCKER	BILANCERE	4
11	**PAF15-07040014**	24-825452	MUELLE	SPRING, ROCKER B	MOLLA	3
12	**PAF15-07040009**	880135	ALOJAMIENTO	BUSHER, VALVE INTAKE	GOMMINO VALVOLA	1
13	**PAF15-07040013**	24-825453	MUELLE	SPRING, ROCKER A	MOLLA	1
14	**PAF15-07040015**	850842	EJE	SHAFT, ROCKER	ASSE	2
15	**PAF15-07040012**	825451	CASQUILLO	BUSHER, VALVE EXHAUST B	COPERCHIO	1
16	**PAF15-07040011**	880134	CASQUILLO	BUSHER, VALVE EXHAUST A	COPERCHIO	1
17	**PAF15-07040000**	900-835430A1	CULATA	CYLINDER HEAD ASSY	TESTATA	1
18	**PAF15-07000001**	17-825689	PIN	HOLLOW PIN	SPINOTTO	2
19	**PAF15-07000100**	27-850836	JUNTA CULATA	GASKET, CYLINDER HEAD	GUARNIZIONE TESTATA	1
20	**PAGB/T5783-M6X25**	10-82500925	TORNILLO	BOLT, HEXAGON	VITE	3
21	**PAF15-07000028**	10-855677	TORNILLO	BOLT, FLANGE	VITE	6
22	**PAF15-07050001**	834954	TAPA BALANCINES	COVER, CYLINDER HEAD	COPERCHIO BILANCERE	1
23	**PAF15-07050002**	850837	JUNTA TAPA	SEAL, CYLINDER COVER	GUARNIZIONE TAPPO	1
24	**PAGB/T5783-M6X20**	825702	TORNILLO	BOLT, HEXAGON	VITE	4
25	**PAGB/T5783-2000**		ARANDELA	WASHER, PLATE	RONDELLA	7
26	**PAF15-07050004**	825490	TAPÓN ACEITE	PLUG, OIL	TAPPO OLIO	1
27	**PAF4-04000008**	25-825492	TÓRICA	O-RING	O-RING	1
28	**PAF15-10030001**		ADHESIVO	MARK 4	ADESIVO	1
29	**NGKDPR6EA-9**	33-827858	BUJÍA	SPARK PLUG	CANDELA	2
30	**POWERHEAD9.9-15**	802733A98	MOTOR	POWER HEAD COMPLETE	MOTORE	15

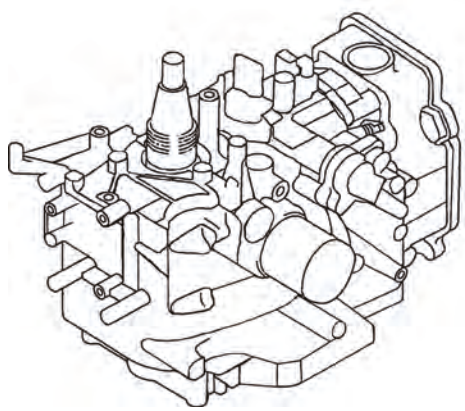

Nº 30

25 (9973100+)

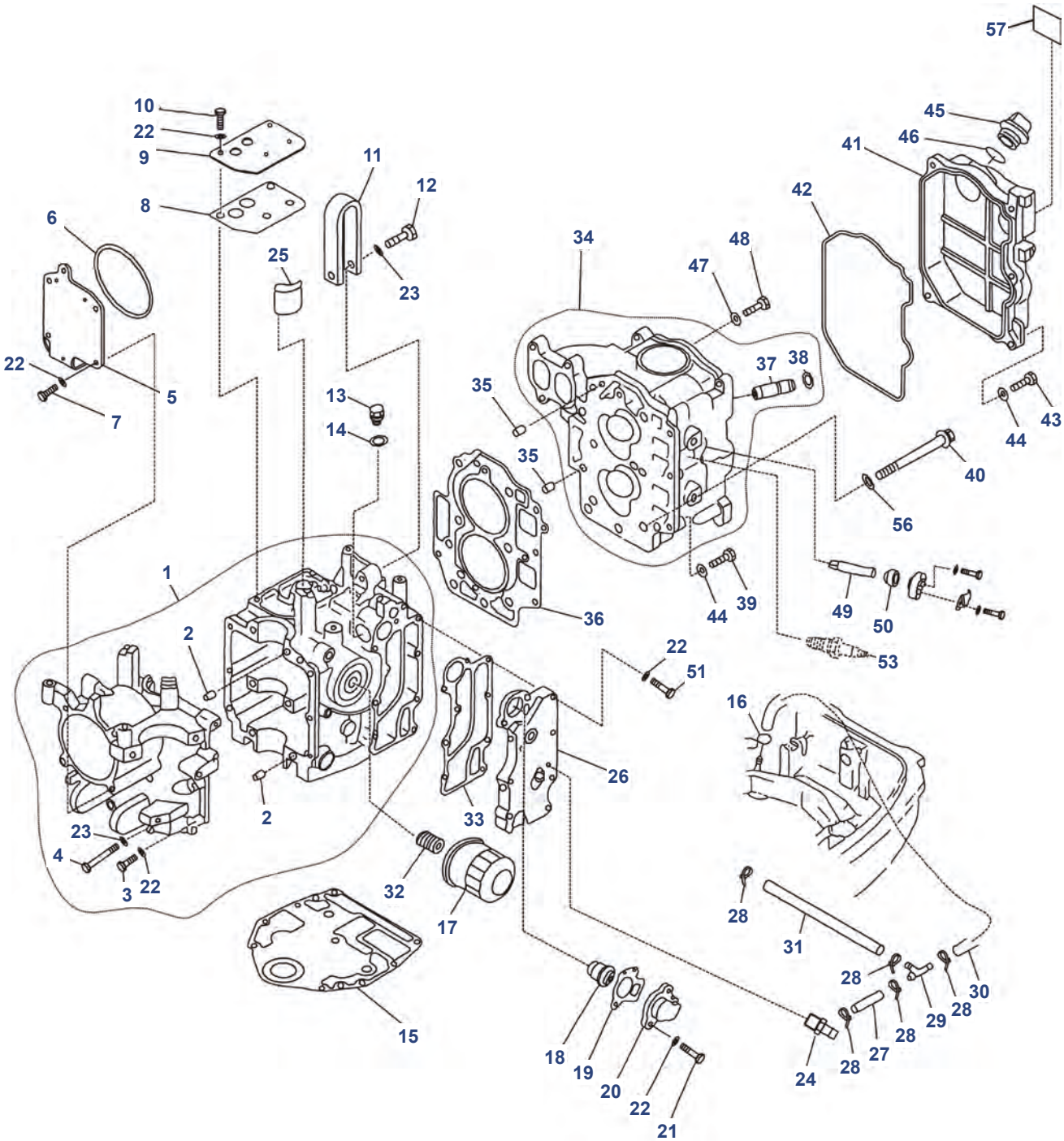

Ref.	R.O.
REC65W-W0001-00	27-830270A98

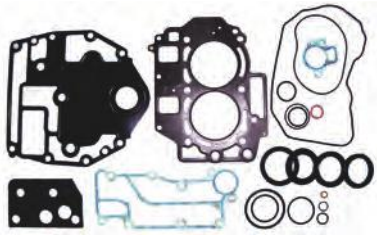

Kit juntas de motor
Power head gasket kit
Kit guarnizione motore

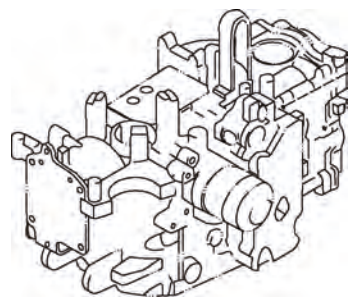

Nº	Ref.	R.O. OEM	Descripción	Description	Descrizione	Cantidad Quanty Quantità
1	**PAF25-05010000**	2806-830267T3	BLOQUE	CRANKCASE ASSY	BLOCCO	1
2	**PAF25-00000014**	17-825010	PIN	PIN, DOWEL	SPINOTTO	2
3	**PAGB/T5782-M6X35**	10-88348935	TORNILLO	BOLT, HEXAGON	VITE	6
4	**PAGB/T5782-M8X80**	10-82506182	TORNILLO	BOLT, HEXAGON	VITE	6
5	**PAF25-05000007**	8556692	TAPA	CRANKCASE	COPERCHIO	1
6	**PAGBT3452.1-97.5X1.8**	25-854722	JUNTA	SEAL	GUARNIZIONE	1
7	**PAGB/T5783-M6X20**	10-40011128	TORNILLO	BOLT, HEXAGON	VITE	4
8	**PAF25-05010108**	27-8547801	JUNTA	GASKET, BREATHERCOVER	GUARNIZIONE	1
9	**PAF25-05010109**	832734A2	TAPA	COVER, BREATHER	TAPPO	1
10	**PAGB/T5783-M6X20**	10-40011128	TORNILLO	BOLT, HEXAGON	VITE	4
11	**PAF25-05010106**	8525601	SOPORTE	HANGER, ENGINE	SUPPORTO	1
12	**PAGB/T5782-M8X35**	10-857139	TORNILLO	BOLT, HEXAGON	VITE	1
13	**PAF15-04000002**	22-479452	TORNILLO DRENAJE	BOLT, OIL DRAIN	VITE DRENAGGIO	1
14	**PAF15-04000003**		ARANDELA	WASHER	RONDELLA	1
15	**PAF25-00000013**	27-8252310	JUNTA BASE MOTOR	GASKET, ENGINE	GUARNIZIONE BASE MOTORE	1
16	**PAF4-04000030**		MUELLE	SPRING, FUEL PIPE “B”	MOLLA	1
17	**REC35-822626Q04**	35-822626Q04	FILTRO ACEITE	OIL CLEANER	FILTRO OLIO	1
18	**PAF15-07000031**	825212	TERMOSTATO	THERMOSTAT	TERMOSTATO	1
19	**PAF15-07010022**	27-824853	JUNTA TERMOSTATO	GASKET, THERMOSTAT	GUARNIZIONE TERMOSTATO	1
20	**PAF15-07010021**	8250311	TAPA TERMOSTATO	COVER, TEHRMOSTAT	TAPPO TERMOSTATO	1
21	**PAGB/T5783-M6X25**	10-88348935	TORNILLO	BOLT	VITE	2
22	**PAGB/T97.1-8**		ARANDELA	WASHER 6	RONDELLA	17
23	**PAGB/T97.1-8**		ARANDELA	WASHER 8	RONDELLA	7
24	**PAF25-05010113**	22-996642	PIPA	NIPPLE, HOSE	TUBO	1
25	**PAF25-05010107**	35-8548091	FILTRO	CLEANER	FILTRO	1
26	**PAF25-05010112**	883336T1	TAPA	OUTTER COVER, EXHAUST	TAPPO	1
27	**PAF25-03000008**		TUBO	HOSE	TUBO	1
28	**PAHT-2.5x60**		BRIDA	CLAMP	FLANGIA	5
29	**PAF15-05000011**		CONECTOR	THREE-WAY PIPE	CONNETTORE	1
30	**PAF25-03000011**		TUBO	HOSE	TUBO	1
31	**PAF25-03000009**		TUBO	HOSE	TUBO	1
32	**PAF15-07010003**	822625	TORNILLO	BOLT, UNION	VITE	1
33	**PAF25-05010111**	27-830298	JUNTA	GASKET, EXHAUST OUTER COVER	GUARNIZIONE	1
34	**PAF25-05050100**	830271T2	CULATA	CYLINDER ASSY	TESTATA	1
35	**PAF25-00000014**	17-825010	PIN	PIN, DOWEL	SPINOTTO	2
36	**PAF25-05040000**	27-830270	JUNTA CULATA	GASKET, CYLINDER HEAD	GUARNIZIONE TESTATA	1
37		825037	GUÍA VÁLVULA	VALVE GUIDE BUSH	GUIDA VALVOLA	4
38		53-825038	CLIP	CIRCLIP, GUIDEBUSH	CLIP	4
39	**PAGB/T5783-M6X25**	10-82500925	TORNILLO	BOLT, HEXAGON	VITE	6
40	**PAF25-05000002**	10-82503395	TORNILLO	BOLT, FLANGE	VITE	9
41	**PAF25-05000005**	830272A1	TAPA BALANCINES	COVER, CLYLINDER HEAD	TAPPO BILANCERE	1
42	**PAF25-05000004**	25-833103	JUNTA TAPA	SEAL,CYLINDER COVER	GUARNIZIONE TAPPO	1
43	**PAGB/T5783-M6X20**	10-40011128	TORNILLO	BOLT, HEXAGON	VITE	5
44	**PAGB/T97.1-8**		ARANDELA	WASHER, PLATE	RONDELLA	10
45	**PAF15-07050004**	825490	TAPÓN ACEITE	PLUG, OIL	TAPPO OLIO	1
46	**PAJASOF40431-025**	25-825492	TÓRICA	O-RING	O-RING	1
47	**PAF25-05050007**	27-827610	JUNTA	GASKET	GUARNIZIONE	1
48	**PAF25-05050006**	10-827607	TORNILLO	BOLT	VITE	1
49	**CM826887M**	826887M	ÁNODO	ANODE	ANODO	2
50	**PAF15-07010009**	25-825040	ALOJAMIENTO	GROMMET, ANODE	ANELLO TENUTA	2
51	**PAGB/T5783-M6X35**	10-88348935	TORNILLO	BOLT	VITE	7
52	**POWERHEAD20-25**		MOTOR	COMPLETE, POWER	MOTORE	1
53	**NGKDPR6EA-9**	33-827858	BUJÍA	SPARK-PLUG	CANDELA	2

25 (9973100+)

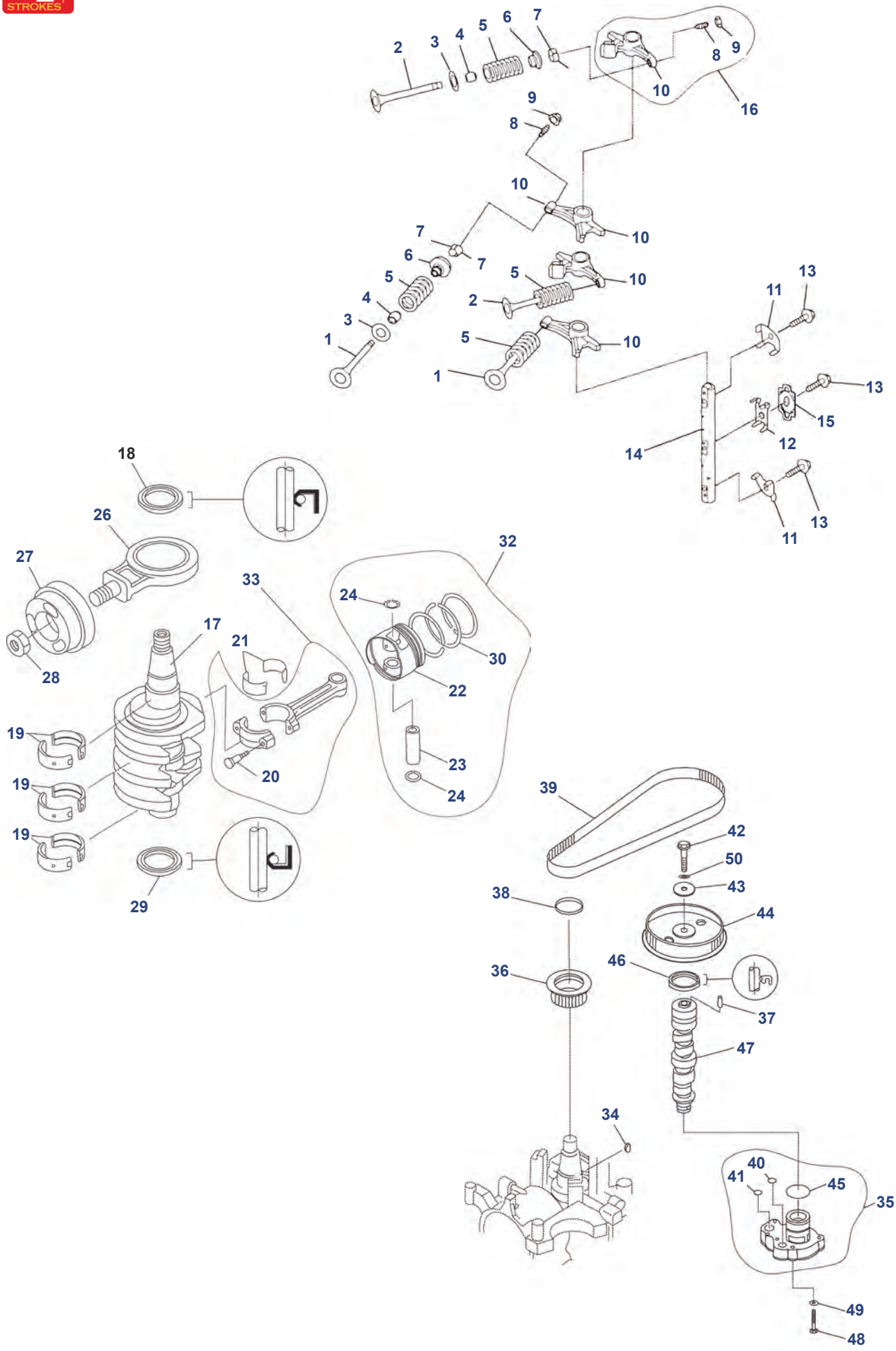
1
2
3
4
5
6
7
8
9
10
11
12
13
14
15
16
17
18
19
20
21
22
23
24
26
27
28
29
30
32
33
34
35
36
37
38
39
40
41
42
43
44
45
46
47
48
49
50

Nº	Ref.	R.O. OEM	Descripción	Description	Descrizione	Cantidad Quanty Quantità
1	**PAF25-05050001**	822649	VÁLVULA ADMISIÓN	VALVE, INTAKE	VALVOLA ASPIRAZIONE	2
2	**PAF25-05050002**	832990	VÁLVULA ESCAPE	VALVE, EXHAUST	VALVOLA SCARICO	2
3	**PAF25-05050003**	12-825044	ASIENTO MUELLE	SEAL, VALVE SPRING	MOLLA VALVOLA	4
4	**PAPS2700.04.03**	26-822647	RETÉN VÁLVULA	SEAL, VALVE STEM	GOMMINO VALVOLA	4
5	**PAF25-05050005**	24-823678	MUELLE	SPRING, VALVE	MOLLA	4
6	**PAF15-07040006**	822650	RESORTE	RETAINER, VALVE SPRING	FERMA VALVOLA	4
7	**PAF15-07040007**	28-822651	SEGURO VÁLVULA	COTTER, VALVE	VALVOLA SICUREZZA	8
8	**PAF15-07040303**	10-825046	TORNILLO	SCREW, VALVE ADJUSTING	VITE	1
9	**PAF15-07040304**	11-826150	TUERCA	NUT	GHIERA	1
10	**PAF25-05050301**	825045A2	BALANCÍN	ROCKET	BILANCERE	1
11	**PAF25-05050009**	825050	PLETINA	PLATE, BOLT STOPPER	PIASTRINA	2
12	**PAF25-05050011**	24-825052	MUELLE	SPRING	MOLLA	1
13	**PAF25-05050019**	10-82641030	TORNILLO	BOLT	VITE	3
14	**PAF25-05050008**	830274	EJE	SHAFT, ROCKET	ASSE	1
15	**PAF25-05050012**	24-825052	PLETINA	PLATE B, BOLT STOPPER	PIASTRINA	1
16	**PAF25-05050300**		BALANCÍN COMPLETO	ROCKET ASSY	BILANCERE COMPLETO	4
17	**PAF25-05020001**	2418-830269A1	CIGÜEÑAL	CRANK SHAFT	ALBERO MOTORE	1
18	**PAF25-05020003**	26-825027	RETÉN	OIL SEAL B	PARAOLIO	1
19	**PAF25-05010302-1**	23-825024	COJINETE BANCADA	MAIN BEARING	CUSCINETTI BANCO	6
19	**PAF25-05010302-2**	23-8250241	COJINETE BANCADA	MAIN BEARING	CUSCINETTI BANCO	6
20	**PAF25-05020204**	10-825010	TORNILLO	BOLT, CONNECTING ROD	VITE	2
21	**PAF25-05020203-1**	23-825021	COJINETE BIELA	PLANE BEARING, CONNECTING ROD	CUSCINETTI BIELLA	2
21	**PAF25-05020203-2**	23-8250212	COJINETE BIELA	PLANE BEARING, CONNECTING ROD	CUSCINETTI BIELLA	2
22	**PAF25-05020101**	702-833098A1	PISTÓN	PISTON	PISTONE	2
23	**PAF25-05020105**	41-825016	BULÓN	PIN, PISTON	BULLONE	2
24	**PAF25-05020106**	40-825017	CLIP	CIRCLIP	CLIP	4
26	**PAF25-05020310**	652-831876A1	BIELA	CON-ROD ASSY, BALANCE	BIELLA	1
27	**PAF25-05020301**	701-8318751	PISTÓN BALANCE	PISTON, BALANCE	CONTRO PISTONE	1
28	**PAF25-05000026**	11-81773M	TUERCA	NUT	GHIERA	1
29	**PAF25-05020002**	26-832013	RETÉN	OIL-SEAL A	GUARNIZIONE	1
31	**REC67C-11603-00**		ARO PISTÓN KIT	PISTON RING KIT	FASCIA PISTONE KIT	2
32	**PAF25-05020100**		PISTÓN COMPLETO	PISTON ASSY	PISTONE COMPLETO	2
33	**PAF25-05020200**	650-825018A1	BIELA	ROD, CONNECTING	BIELLAA	2
34	**PAF4-04000019**	28-18856M	CHAVETA	KEY, WOODRUF	CHIAVETTA	1
35	**PAF25-05050400**	852388A1	BOMBA ACEITE	OIL PUMP ASSY	POMPA OLIO	1
36	**PAF25-05000021**	833102	POLEA	BELT PULLEY, TIMING	PULEGGIA	1
37	**PAF25-05050016**	17-825956	PIN	PIN, DOWELL	SPINOTTO	1
38	**PAF25-05000022**		MUELLE	BUSH, SPRING	MOLLA	1
39	**PAF25-05000023**	831294	CORREA DISTRIBUCIÓN	BELT, TIMING	CINGHIA DISTRIBUZIONE	1
40	**PAF25-05050013**	25-826153	TÓRICA	O-RING A	O-RING	1
41	**PAF25-05050014**	25-826154	TÓRICA	O-RING B	O-RING	1
42		10-82761140	TORNILLO	BOLT	VITE	1
43	**PAF25-05050018**	12-4002319	ARANDELA	WASHER, PLATE	RONDELLA	1
44	**PAF25-05050017**	833104	POLEA DENTADA	BELT PULLEY, DRIVEN	PULEGGIA DENTATA	1
45	**PAF25-05050015**	25-826152	TÓRICA	O-RING C	O-RING	1
46	**PAF25-05050021**	26-825048	RETÉN	OIL SEAL	PARAOLIO	1
47	**PAF25-05050200**	2419-82500935	ÁRBOL DE LEVAS	CAMSHAFT ASSY	ALBERO MOTORE	1
48	**PAGB/T5782-M6X125**		TORNILLO	BOLT	VITE	4
49	**PAGB/T97.1-8**		ARANDELA	WASHER, PLATE	RONDELLA	4
50	**PAGB/T97.1-8**		ARANDELA	WASHER, PLATE	RONDELLA	1

30 CARB, EFI
40 CARB, EFI

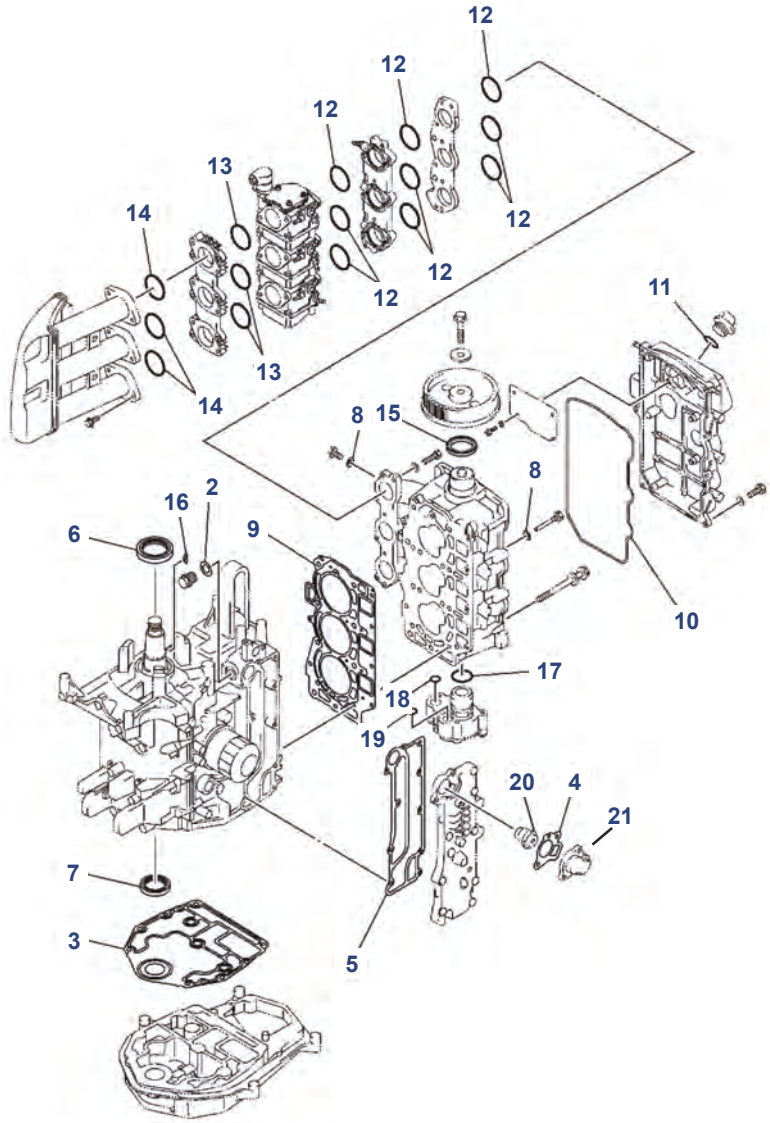

Ref.	R.O.
REC67C-W0001-01	27-825231A99

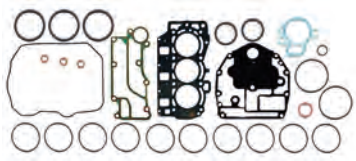

Kit juntas de motor
Power head gasket kit
Kit guarnizione motore

Nº	Ref.	R.O. OEM	Descripción	Description	Descrizione	Cantidad Quanty Quantità
1	**REC67C-W0001-01**	27-825231A99	KIT JUNTAS	POWER HEAD GASKET KIT	KIT GUARNIZIONI	1
2	**PAF15-04000003**		JUNTA	GASKET	GUARNIZIONE	1
3	**REC67C-11351-00**	27-825231	JUNTA BASE MOTOR	GASKET, CYLINDER	GUARNIZIONE BASE MOTORE	1
4	**PAF4-04000011**	27-824853	JUNTA TERMOSTATO	GASKET, COVER	GUARNIZIONE TERMOSTATO	1
5	**REC67C-41114-00**	27-8347751	JUNTA	GASKET, EXHAUST COVER	GUARNIZIONE	1
6	**PAF25-05020003**	26-825027	RETÉN	OIL SEAL	PARAOLIO	1
7	**PAF25-05020002**	26-832013	RETÉN	OIL SEAL	PARAOLIO	1
8	**PAF25-05010111**	27-827610	JUNTA	GASKET	GUARNIZIONE	4
9	**REC67C-11181-01**	27-834777	JUNTA CULATA	GASKET, CYLINDER HEAD	GUARNIZIONE TESTATA	1
10	**REC67C-11356-00**	25-854341	JUNTA	SEAL, CYLINDER	GUARNIZIONE	1
11	**PAJASOF40431-025**		TÓRICA	O-RING	O-RING	2
12		25-825057	TÓRICA	O-RING	O-RING	9
13		25-856525	TÓRICA	O-RING	O-RING	3
14			TÓRICA	O-RING	O-RING	3
15	**PAF25-05050021**	26-825048	RETÉN	OIL SEAL	PARAOLIO	1
16	**PAF25-05000024**	28-91800	CHAVETA	KEY, WOODRUFF	CHIAVETTA	1
17	**PAF25-05050015**	25-826152	TÓRICA	O-RING	O-RING	1
18	**PAF25-05050013**	25-826154	TÓRICA	O-RING	O-RING	1
19	**PAF25-05050014**	25-826153	TÓRICA	O-RING	O-RING	1
20	**REC825212T02**	825212	TERMOSTATO	THERMOSTAT	TERMOSTATO	1
21	**PAF15-07010021**	8250311	TAPA TERMOSTATO	THERMOSTAT CUP	COPERCHIO TERMOSTATO	1

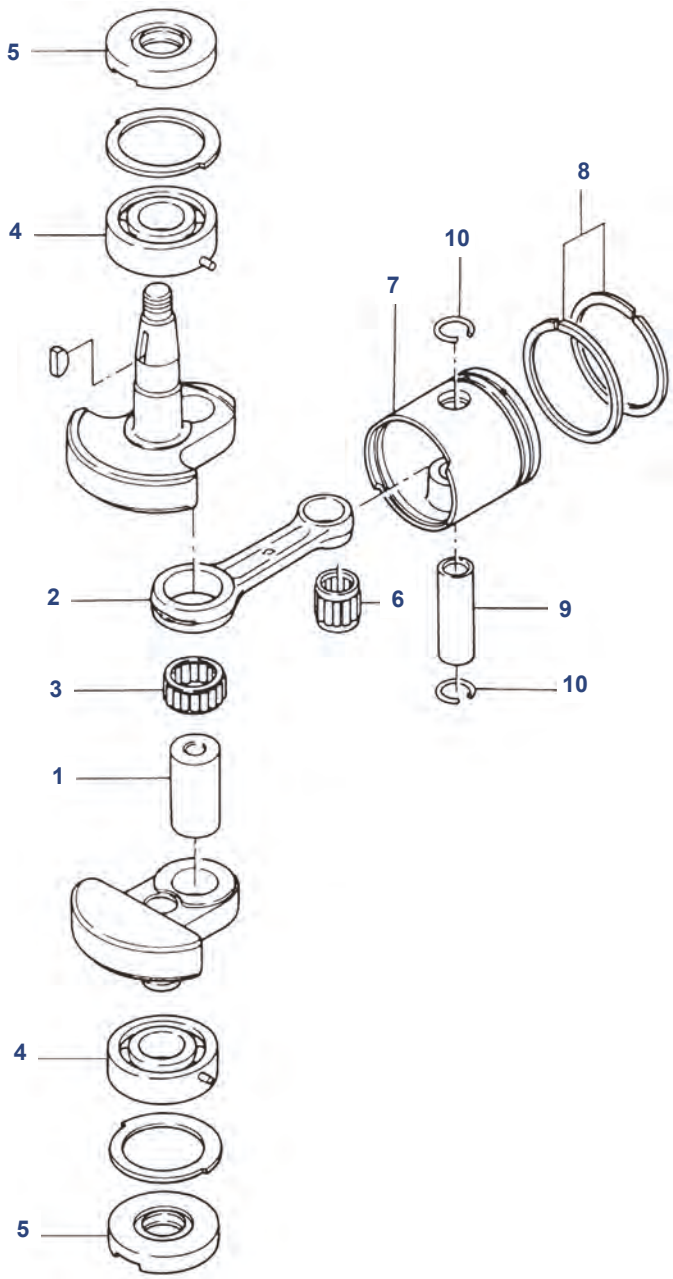

Nº	Ref.	R.O. OEM	Descripción	Description	Descrizione	Cantidad Quanty Quantità
1	**REC813046002**	813046002	PIN	CRANK PIN	SPINOTTO	1
2		629-813047	BIELA	CONNECTING ROD	BIELLA	1
3	**REC31-813048**	31-813048	COJINETE DE AGUJA	NEEDLE BEARING	CUSCINETTO	1
4	**REC30-16049**	30-16049	RODAMIENTO	BALL BEARING	CUSCINETTO	2
5	**REC26-16051**	26-16051	RETÉN ACEITE	OIL SEAL	PARAOLIO	2
6	**REC31-16052**	31-16052	COJINETE DE AGUJA	NEEDLE BEARING	CUSCINETTO	1
7	**REC779-9615T**	779-9615T	PISTÓN STD	PISTON STD	PISTONE STD	1
8	**REC8M0080357**	8M0080357	AROS	PISTON RING	FASCE	2
9	**REC41-16056**	41-16056	PIN	PISTON PIN	SPINOTTO	1
10	**REC53-16057**	53-16057	CLIP	CLIP	CLIP	2

MARINER 4A
(6EO-001011+ (M), (6EO-300101+ (ML)

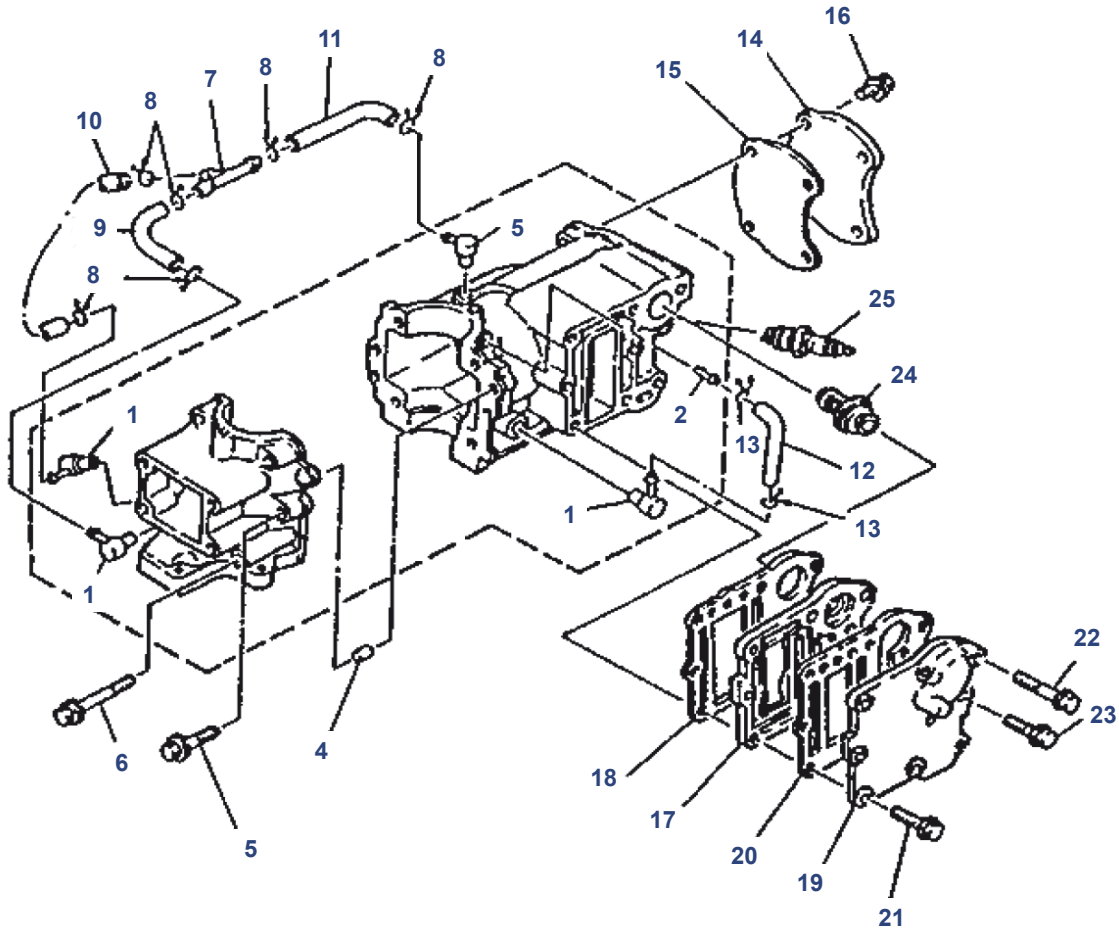

Nº	Ref.	R.O. OEM	Descripción	Description	Descrizione	Cantidad Quanty Quantità
1	**REC650-11370-00**	21-80727M	VÁLVULA	CHECK VALVE ASSY	VALVOLA	3
2		22-80122M	JUNTA	PIPE, JOINT	GUARNIZIONE	1
3		22-99988M	RACORD TUBO	NIPPLE, HOSE	RACCORDO TUBO	1
4	**PAF15-00000006**	18842M	PIN CENTRADOR	PIN, DOWEL	SPINOTTO CENTRAGGIO	2
5		10-91681M	TORNILLO	BOLT, FLANGE	VITE	4
6		10-91710M	TORNILLO	BOLT, FLANGE	VITE	2
7		22-99989M	JUNTA	PIPE, JOINT 4	GUARNIZIONE	1
8		27-99991M	CLIP ABRAZADERA	CLIP	CLIP FASCETTA	5
9		32-83088M	TUBO	HOSE (L100)	TUBO	1
10		32-91709M	TUBO	HOSE (L70)	TUBO	1
11		32-99990M	TUBO	HOSE (L120)	TUBO	1
12		32-91709M	TUBO	HOSE (L70)	TUBO	1
13		54-82046M	CLIP ABRAZADERA	CLIP	CLIP FASCETTA	2
14		99992M	TAPA	COVER, CYLINDER HEAD	COPERCHIO	1
15	**REC6E0-11193-A1**	27-99991M	JUNTA TAPA	GASKET, HEAD COVER	GUARNIZIONE TAPPO	1
16		10-91686M	TORNILLO	BOLT, FLANGE	VITE	4
17		99994M	PLACA	INNER COVER, EXHAUST	PIASTRA	1
18	**REC6E0-41112-A1**	27-99995M	JUNTA ESCAPE	GASKET, EXHA COVER	GUARNIZIONE SCARICO	1
19		11920M	TAPA ESCAPE	OUTER COVER, EXHAUST	COPERCHIO SCARICO	1
20	**REC6E0-41114-A1**	27-99993M	JUNTA ESCAPE	GASKET, EX COVER	GUARNIZIONE SCARICO	1
21		10-11945M	TORNILLO	BOLT, FLANGE	VITE	7
22		10-91666M	TORNILLO	BOLT, FLANGE	VITE	1
23		10-91681M	TORNILLO	BOLT, FLANGE	VITE	1
24	**REC6E5-12411-02**	83282M	TERMOSTATO	THERMOSTAT	TERMOSTATO	1
25	**NGKBR7HS**	33-53098	BUJÍA	SPARKPLUG	CANDELA	1

MARINER 4A
(6EO-001011+ (M), (6EO-300101+ (ML)

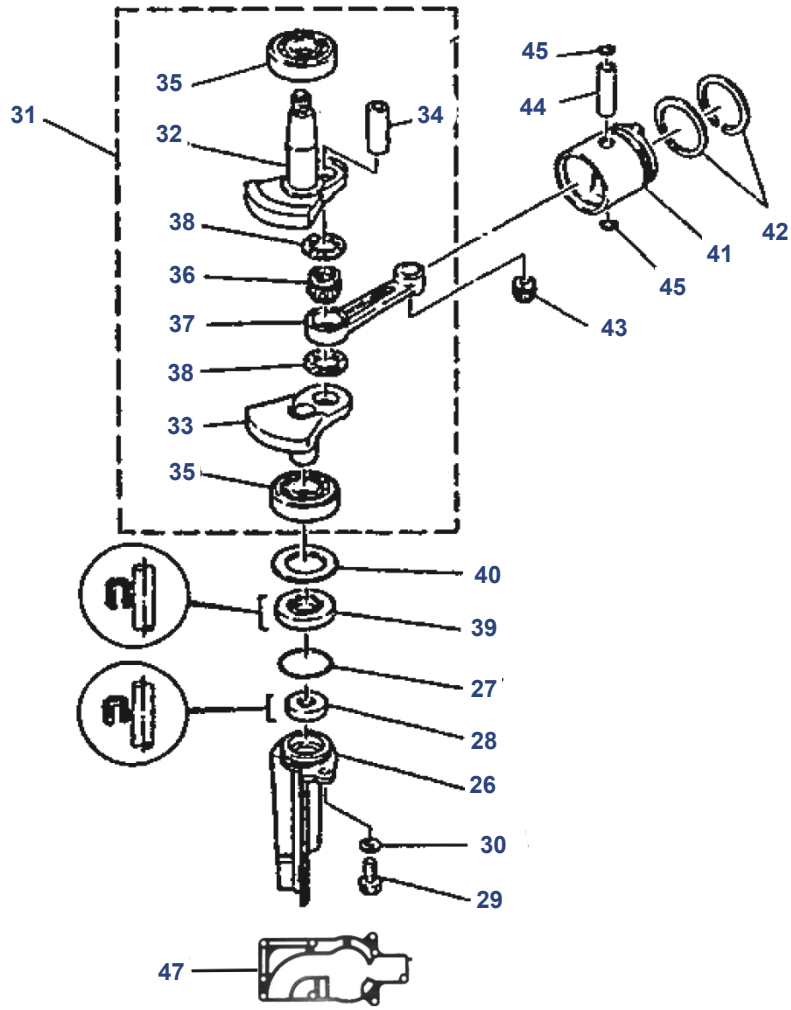

Nº	Ref.	R.O. OEM	Descripción	Description	Descrizione	Cantidad Quanty Quantità
26		814455M	CUERPO RETÉN	HOUSING, OIL SEAL	GUARNIZIONE CORPO	1
27		25-91727M	ARO TÓRICO	O-RING	O-RING	1
28	**REC93101-10M25**	26-95472M	RETÉN	OIL SEAL	PARAOLIO	1
29		10-91725	TORNILLO	BOLT	VITE	1
30		12-82214M	ARANDELA	WASHER	RONDELLA	1
31		463-8255M	CIGÜEÑAL COMPLETO	CRANKSHAFT	ALBERO MOTORE COMPLETO	1
32			PARTE 1 CIGÜEÑAL	CRANK 1	ALBERO MOTORE PARTE 1	1
33			PARTE 2 CIGÜEÑAL	CRANK 2	ALBERO MOTORE PARTE 2	1
34	**REC6G1-11681-00**		PASADOR	PIN, CRANK 1	SPINOTTO	1
35	**REC93306-204U0**	30-18859M	RODAMIENTO	BEARNIG	CUSCINETTO	2
36	**REC93310-418V1**		RODAMIENTO	BEARING	CUSCINETTO	1
37	**REC6E0-11651-01**		BIELA	ROD, CONNECTING	BIELLA	1
38	**REC90209-18112**		ARANDELA	WASHER	RONDELLA	2
39	**REC93101-20M29**	26-18843M	RETÉN	OIL SEAL	PARAOLIO	1
40		12-91723M	ARANDELA	WASHER, PLATE	RONDELLA	1
41	**REC6E0-11631-00-98K**	761-8256M	PISTÓN	PISTON (STD)	PISTONE	1
42	**REC6G1-11610-00**	39-11462M	SEGMENTOS PISTÓN	PISTON RING (STD)	FASCE PISTONE	1
	REC6J1-11610-00	39-14197M	SEGMENTOS PISTÓN	PISTON RING (STD) (5C ENGINES)	FASCE PISTONE	1
43	**REC93310-112V0**	31-91721M	RODAMIENTO	BEARING	CUSCINETTO	1
44	**REC6G1-11633-00**	41-95601M	BULÓN	PIN, PISTÓN	SPINOTTO	1
45	**REC93450-13022**	53-82342M	CIERRE	CIRCLIP	CLIP CHIUSURA	2
47	**REC6E0-45113-A1**	27-91780	JUNTA BASE	GASKET, UPPER CASING	GUARNIZIONE BASE	1

6HP / 8HP / 9.8HP
(2CYL- INTERNATIONAL)

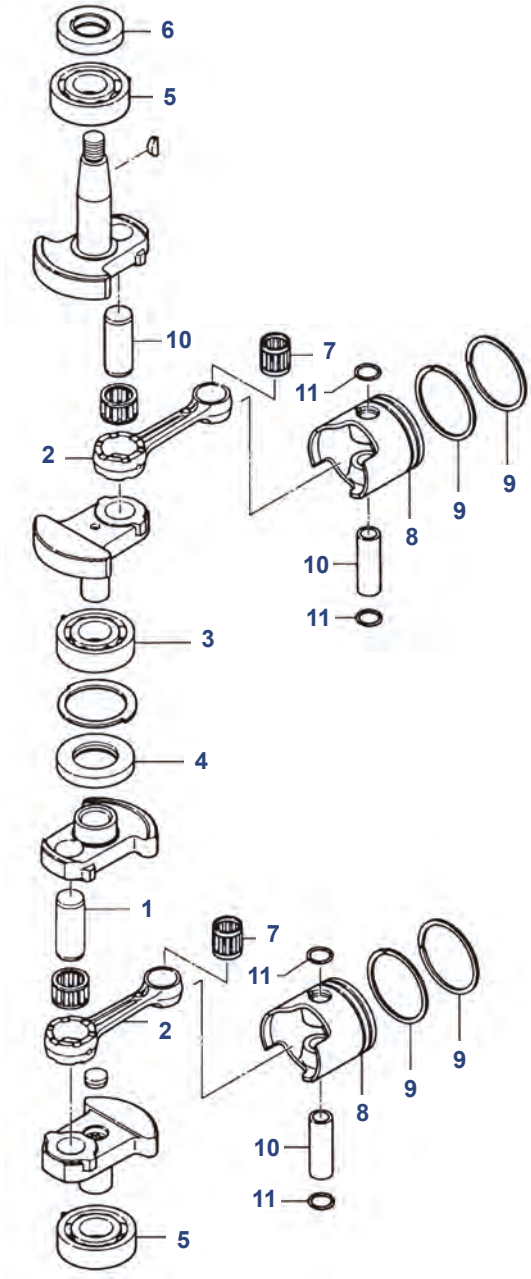

Nº	Ref.	R.O. OEM	Descripción	Description	Descrizione	Cantidad Quanty Quantità
1		803671	PIN	CRANK PIN	SPINOTTO	2
2	**REC629-8036741**	629-8036741	BIELA	CONNECTING ROD	BIELLA	2
3	**REC30-16049**	30-16049	RODAMIENTO	BALL BEARING	CUSCINETTO	1
4	**REC26-85370711**	26-85370711	RETÉN ACEITE	OIL SEAL	PARALIO	1
5	**REC30-16049**	30-16049	RODAMIENTO	BALL BEARING	CUSCINETTO	2
6	**REC26-803514**	25-803514	RETÉN ACEITE	OIL SEAL	PARALIO	1
7	**REC31-8036752**	31-8036752	COJINETE DE AGUJA	NEEDLE BEARING	CUSCINETTO	2
8	**REC779-804886**	779-804886	PISTÓN STD	PISTON STD	PISTONE STD	2
9	**REC39-803678A3**	39-803678A3	AROS STD	PISTON RING STD	O-RING STD	4
10	**REC41-8036801**	41-8036801	PIN	PISTON PIN	SPINOTTO	2
11	**REC53-16057**	53-16057	CLIP	CLIP	CLIP	2

2 TIEMPOS 2 STROKES

MARINER 6C/D, 8C

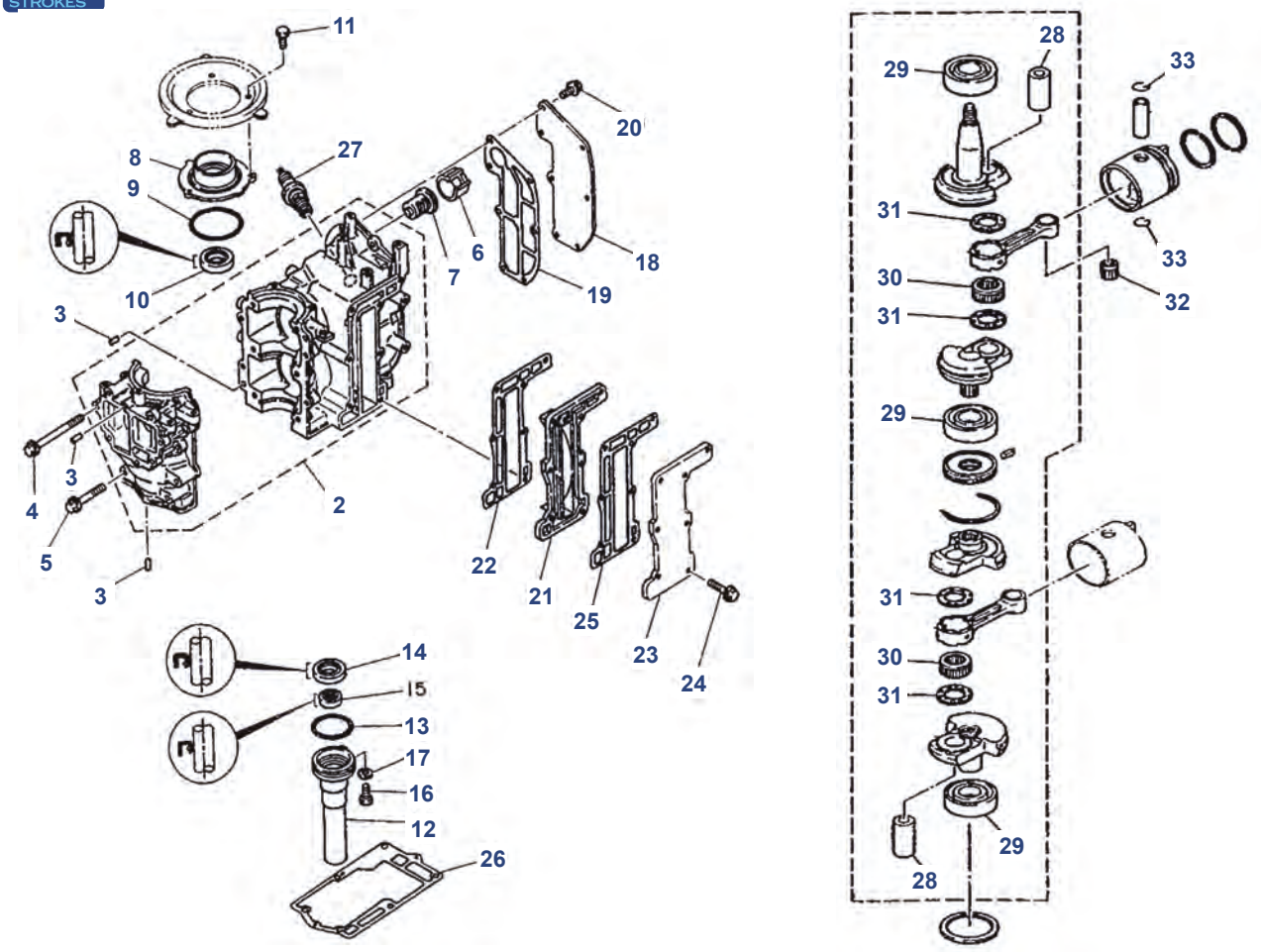

Nº	Ref.	R.O. OEM	Descripción	Description	Descrizione	Cantidad Quanty Quantità
3		17-82354M	PIN CENTRADOR	PIN, DOWEL	SPINOTTO CENTRAGGIO	4
4		10-11448M	TORNILLO	BOLT, FLANGE	VITE	6
5		10-11449M	TORNILLO	BOLT, FLANGE	VITE	4
6		11452M	CASQUILLO	COLLAR	COPERCHIO	1
7	**REC6E5-12411-02**	11919M	TERMOSTATO	THERMOSTAT	TERMOSTATO	1
8		14201M	CUERPO RETÉN	HOUSING, OIL SEAL	CORPO GUARNIZIONE	1
9	**REC93210-54M54**	25-11451M	ARO TÓRICO	O-RING	O-RING	1
10	**REC93102-20M25**	26-14195M	RETÉN	OIL SEAL	PARAOLIO	1
11		10-84247M	TORNILLO	BOLT	VITE	3
12		11463M	CUERPO RETÉN	HOUSING, OIL SEAL	CORPO GUARNIZIONE	1
13	**REC93210-42159**	26-94663M	ARO TÓRICO	O-RING	O-RING	1
14	**REC93101-20M34**	23-81841M	RETÉN	OIL SEAL	PARAOLIO	1
16		10-91725M	TORNILLO	BOLT	VITE	1
17		12-82214M	ARANDELA	WASHER	RONDELLA	1
18		11453M	TAPA	COVER CYLINDER HEAD	COPERCHIO	1
19	**REC6G1-11193-A1**	27-11454M	JUNTA TAPA TERMOSTATO	GASKET THERMOSTAT COVER	GUARN. COPERCHIO TERMOSTATO	1
20		10-91686M	TORNILLO	BOLT, FLANGE	VITE	7
21		11455M	PLACA	INNER COVER, EXHAUST	PIASTRA	1
22	**REC6G1-41112-A1**	27-11456M	JUNTA ESCAPE	GASKET, EXHAUST INNER COVER	GUARNIZIONE SCARICO	1
23		11457M	TAPA	OUTER COVER, EXHAUST	COPERCHIO	1
24		10-11945M	TORNILLO	BOLT, FLANGE	VITE	7
25	**REC6G1-41114-A0**	27-11456M	JUNTA ESCAPE	GASKET, EXHAUST OUTER COVER	GUARNIZIONE SCARICO	1
26	**REC6G1-45113-A1**	27-11560M	JUNTA BASE	GASKET, UPPER CASING	GUARNIZIONE BASE	1
27	**NGKBR7HS-10**	33-41263M	BUJÍA	PLUG, SPARK (NGK BR7HS-10)	CANDELA	2
27	**NGKBR6HS-10**	33-11458M	BUJÍA	PLUG, SPARK (NGK BR6HS-10) (6C ENGINES)	CANDELA	2
28	**REC6G1-11681-00**		BULÓN	PIN, CRANK 1	SPINOTO	2
29	**REC93306-204U0**	30-82299M	RODAMIENTO	BEARING	CUSCINETTO	3
30	**REC93310-418V1**		RODAMIENTO	BEARING	CUSCINETTO	2
31	**REC90209-18112**		ARANDELA	WASHER	RONDELLA	4
32	**REC93310-112V0**	31-91721M	RODAMIENTO	BEARING	CUSCINETTO	2
33	**REC93450-13022**	53-82342M	CLIP	CIRCLIP	CLIP CHIUSURA	4

8K (K-LONG / K-SHORT)
W8 (W/MARATHON

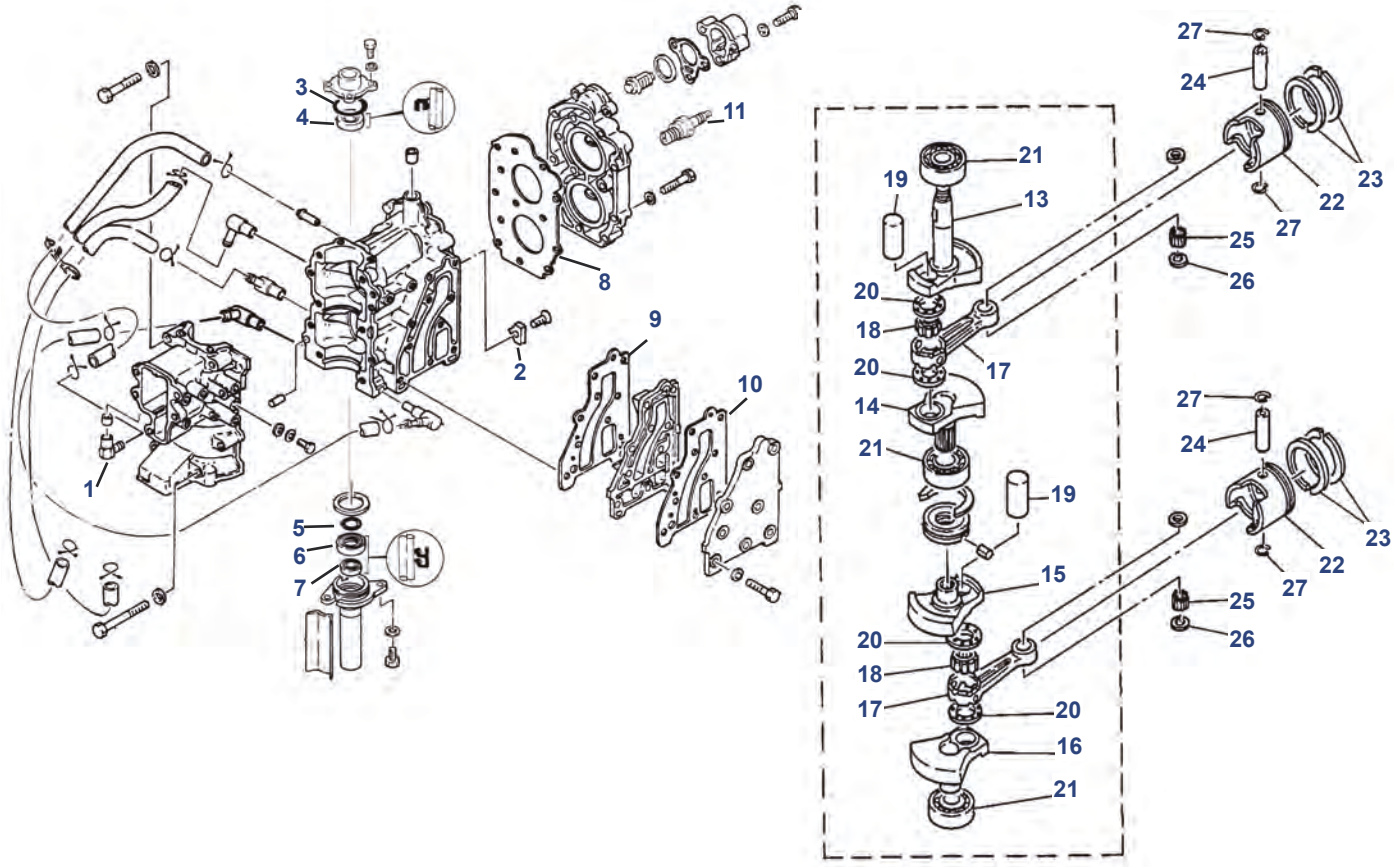

Nº	Ref.	R.O. OEM	Descripción	Description	Descrizione	Cantidad Quanty Quantità
1	**REC650-11370-00**	21-80727M	VÁLVULA DE CONTROL COMPL.	CHECK VALVE ASSY	VALVOLA DI CONTROLLO COMPL.	1
2	**TEN01121**	84732M	ÁNODO	ANODE	ANODO	1
3	**REC93210-42159**	25-82276M	ANILLO	O-RING	O-RING	1
4	**REC93102-20M25**	26-14195M	RETÉN ACEITE	OIL SEAL	PARAOLIO	1
5	**REC93210-42M70**	25-95602M	ANILLO	O RING	O-RING	1
6	**REC93101-20M29**	26-18843M	RETÉN ACEITE	OIL SEAL	PARAOLIO	1
7	**REC93101-14M01**	26-82165M	RETÉN ACEITE	OIL SEAL	PARAOLIO	1
8	**REC677-11181-A0**	27-95595M	JUNTA DE CULATA 1	GASKET, CYLINDER HEAD	GUARNIZIONE TESTATA 1	1
9	**REC677-41112-A0**	27-95597M	JUNTA	GASKET, EXHAUST INNER COVER	COPERCHIO	1
10	**REC677-41112-A0**	27-95597M	JUNTA	GASKET, EXHAUST OUTER COVER	COPERCHIO	1
11	**NGKB7HS-10**	33-82370M	BUJÍA (NGK B7HS-10)	PLUG, SPARK (NGK B7HS-10)	CANDELA (NGK B7HS-10)	2
12		463-9327M	CIGÜEÑAL COMPLETO	CRANKSHAFT COMPLETE	ALBERO MOTORE COMPLETO	1
13	**REC677-11412-02**		CIGÜEÑAL 1	CRANK 1	LEVA 1	1
14	**REC677-11422-02**		CIGÜEÑAL 2	CRANK 2	LEVA 2	1
15	**REC677-11432-02**		CIGÜEÑAL 3	CRANK 3	LEVA 3	1
16	**REC677-11442-02**		CIGÜEÑAL 4	CRANK 4	LEVA 4	1
17	**REC6E0-11651-01**	629-9492M	BIELA	ROD, CONNECTING	BIELLA	2
18	**REC93310-418U0**	31-94769M	RODAMIENTO	BEARING	GABBIA A RULLI	2
19	**REC6G1-11681-00**	17-14193M	PIN	PIN	SPINOTTO	2
20	**REC90209-18112**	12-84620M	ARANDELA	WASHER	RONDELLA	4
21	**REC93306-204U0**	30-18859M	RODAMIENTO	BEARING	CUSCINETTO	3
22	**REC677-11631-00K**	761-8224M	PISTÓN (STD)	PISTON (STD)	PISTONE (STD)	2
	REC677-11635-00K	761-8225M	PISTÓN (0.25mm O/S)	PISTON (0.25mm O/S)	PISTONE (0.25mm O/S)	2
	REC677-11636-00K	761-8226M	PISTÓN (0.50mm O/S)	PISTON (0.50mm O/S)	PISTONE (0.50mm O/S)	2
23	**REC647-11610-00**	39-80422M	KIT AROS PISTÓN (STD)	PISTON RING SET (STD)	KIT FASCE (STD)	2
	REC647-11610-10	39-80423M	KIT AROS PISTÓN (0.25mm O/S)	PISTON RING SET (0.25mm O/S)	KIT FASCE (0.25mm O/S)	2
	REC647-11610-20	39-80424M	KIT AROS PISTON (0.50mm O/S)	PISTON RING SET (0.50mm O/S)	KIT FASCE (0.50mm O/S)	2
24	**REC6G1-11633-00**	41-95601M	PIN, PISTON	PIN, PISTON	SPINOTTO, PISTONE	2
25	**REC93602-14118**	29-82350M	RODAMIENTOS	BEARING	CUSCINETTO	56
26	**REC90201-12565**	12-81816M	ARANDELA	WASHER, PLATE	RONDELLA PIANA	4
27	**REC93450-13022**	53-82342M	CIRCLIP	CIRCLIP	CLIP CHIUSURA	4

9.9 HP / 15 HP / 18 HP (2CYL - INTER.)

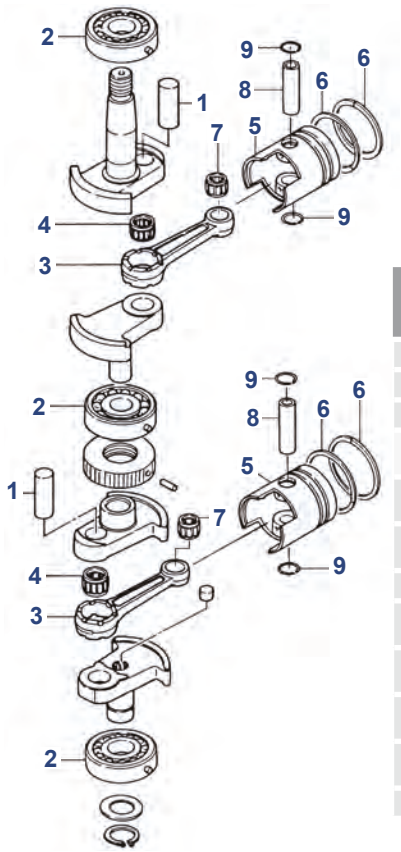

Nº	Ref.	R.O. OEM	Descripción	Description	Descrizione	Cantidad Quanty Quantità
1	**REC803673**	803673	PIN	CRANK PIN	SPINOTTO	2
2	**REC30-160494**	30-160494	RODAMIENTO	BALL BEARING	CUSCINETTO	3
3	**REC629-803674**	629-803674	BIELA	CONNECTING ROD	BIELLA	2
4		31-803675	COJINETE DE AGUJA	NEEDLE BEARING	CUSCINETTO	2
5	**REC779-803677**	779-803677	PISTÓN STD, 18 HP	PISTON STD	PISTONE STD	2
	REC779-803677T02	779-803677T02	PISTÓN STD, 9.9 / 15 HP	PISTON STD	PISTONE STD	2
6	**REC39-803678A1**	39-803678A1	AROS, 18 HP	PISTON RING	FASCE	2
	REC8M0080357	8M0080357	AROS, 9.9 / 15 HP	PISTON RING	FASCE	2
7	**REC31-16052**	31-16052	COJINETE DE AGUJA	NEEDLE BEARING	CUSCINETTO	1
8	**REC41-803680002 18 HP**	41-803680002	PIN	PISTON PIN	SPINOTTO	2
	REC41-825713002 9.9 / 15 HP	41-825713002	PIN	PISTON PIN	SPINOTTO	2
9	**REC53-16057**	53-16057	CLIP	CLIP	CLIP	4

25 HP / 30 HP (2CYL - INTER.)

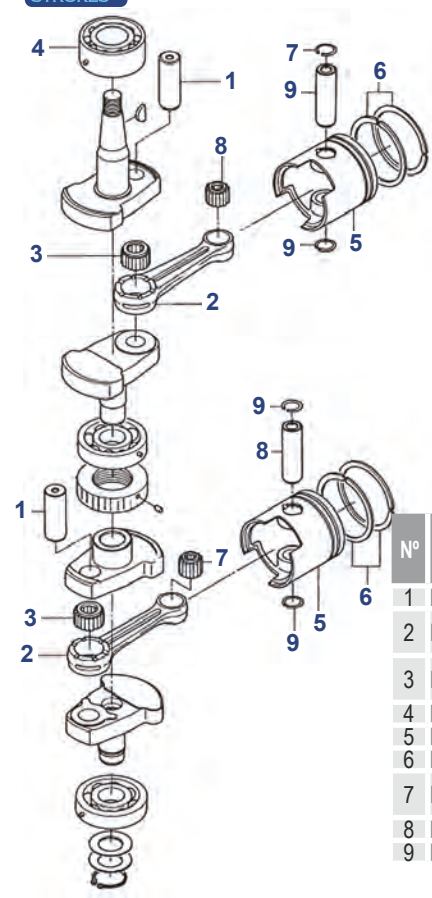

Nº	Ref.	R.O. OEM	Descripción	Description	Descrizione	Cantidad Quanty Quantità
1	**REC8130461**	8130461	PIN	CRANK PIN	SPINOTTO	2
2	**REC629-813047T01**	629-813047T01	BIELA	CONNECTING ROD	BIELLA	2
3	**REC31-8130482**	31-8130482	COJINETE DE AGUJA	NEEDLE BEARING	CUSCINETTO	2
4	**REC30-16049T01**	30-16049T01	RODAMIENTO	BALL BEARING	CUSCINETTO	1
5	**REC779-879194T01**	779-879194T01	PISTÓN STD	PISTON STD	PISTONE STD	2
6	**REC39-16054A5**	39-16054A5	AROS	PISTON RING	FASCE	4
7	**REC345-00042-0**	345-00042-0	COJINETE DE AGUJA	NEEDLE BEARING	CUSCINETTO	1
8	**REC41-803680003**	41-803680003	PIN	PISTON PIN	SPINOTTO	2
9	**REC53-16057**	53-16057	CLIP	CLIP	CLIP	4

40K W40(W/MARATHON)

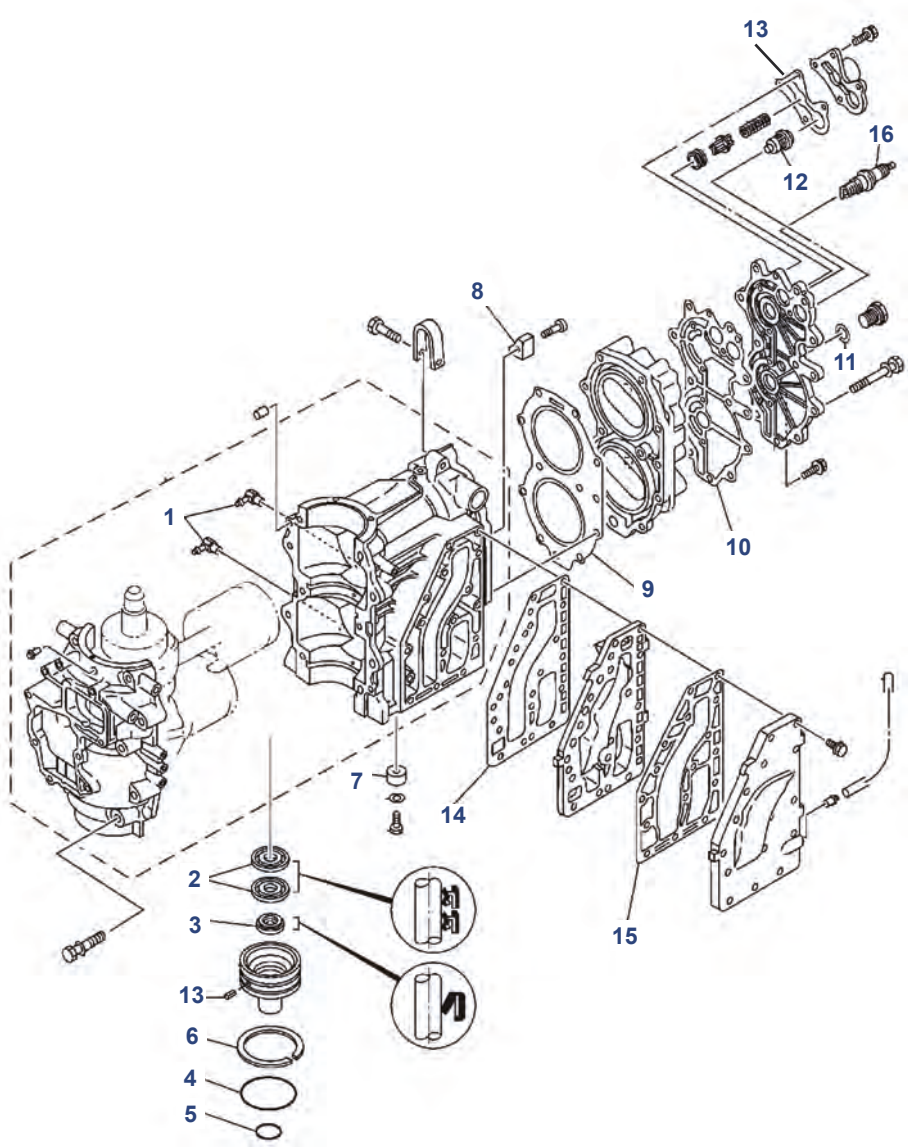

Nº	Ref.	R.O. OEM	Descripción	Description	Descrizione	Cantidad Quanty Quantità
1	**REC650-11370-00**	21-80727M	VÁLVULA CONTROL COMPL.	CONTROL VALVE	VALVOLA DI CONTROLLO COMPL.	2
2	**REC93101-30M33**	26-11758M	RETÉN	OIL SEAL	PARAOLIO	2
3	**REC93104-16M01**	26-189721	RETÉN	OIL SEAL	PARAOLIO	1
4	**REC93210-65M50**	25-11759M	TÓRICA	O-RING	O-RING	1
5	**REC93210-22M02**	25-83348M	TÓRICA	O-RING	O-RING	1
6	**REC93440-68M03**	53-11760M	CIERRE	CIRCLIP	CLIP CHIUSURA	1
7	**TEN01127**	83394M	ÁNODO	ANODE	ANODO	1
8	**TEN01166**	83330M	ÁNODO	ANODE	ANODO	1
9	**REC6F5-11181-A2**	27-11745M	JUNTA DE CULATA 1	HEAD CYLINDER GASKET 1	GUARNIZIONE TESTATA 1	1
10	**REC6F6-11193-A1**	27-11749M	JUNTA CULATÍN	GASKET	GUARNIZIONE	1
11	**PAF15-04000003**	27-11754M	JUNTA	GASKET	GUARNIZIONE	1
12	**REC6F5-12411-03**	814554T01	TERMOSTATO	THERMOSTAT	TERMOSTATO	1
13	**REC6E9-12414-A1**	27-97706M	JUNTA TERMOSTATO	THERMOSTAT GASKET	GUARNIZIONE TERMOSTATO	1
14	**REC6F5-41112-A0**	27-11754	JUNTA ESCAPE	GASKET	GUARNIZIONE SCARICO	1
15	**REC6F5-41114-A0**	27-11756	JUNTA ESCAPE	GASKET	GUARNIZIONE SCARICO	1
16	**NGKB7HS**	33-82371M	BUJÍA	SPARKPLUG	CANDELA	2

2 TIEMPOS STROKES

40K W40(W/MARATHON)

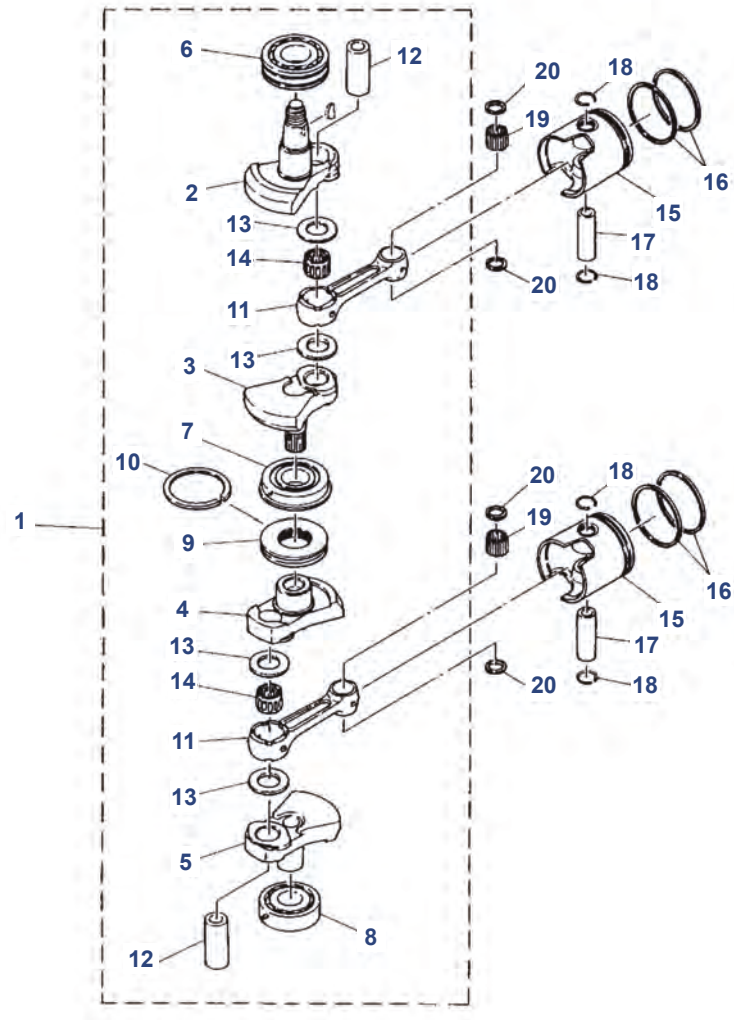

Nº	Ref.	R.O. OEM	Descripción	Description	Descrizione	Cantidad Quanty Quantità
1		463-9327M	CIGÜEÑAL COMPLETO	CRANKSHAFT COMPLETE	ALBERO MOTORE COMPLETO	1
2	**REC6F5-11412-11**	851997M	PARTE 1 CIGÜEÑAL	CRANK 1	PARTE 1 ALBERO MOTORE	1
3	**REC6F5-11422-11**	827142M	PARTE 2 CIGÜEÑAL	CRANK 2	PARTE 2 ALBERO MOTORE	1
4	**REC6F5-11432-11**	827143M	PARTE 3 CIGÜEÑAL	CRANK 3	PARTE 3 ALBERO MOTORE	1
5	**REC6F5-11442-11**	827144M	PARTE 4 CIGÜEÑAL	CRANK 4	PARTE 4 ALBERO MOTORE	1
6	**REC93306-307U0**	30-11766T	COJINETE	BEARING	CUSCINETTO	1
7	**REC93332-000UE**	31-13300T	COJINETE	BEARING	CUSCINETTO	1
8	**REC93306-306V1**	30-11767T	COJINETE	BEARING	CUSCINETTO	1
9	**REC6F5-11515-00**	13301M	RETÉN LABERINTO 1	LABERINTH SEAL 1	GUARNIZIONE SIGILLATA 1	1
10	**REC93440-68M03**	53-11760M	CIERRE	CERCLIP	CLIP CHIUSURA	1
11	**REC6F5-11651-00**	629-9486T	BIELA	CRANK	BIELLA	2
12	**REC6F5-11681-00**	17-13302T	PIN	PISTON PIN	SPINOTTO LEVA 1	2
13	**REC90209-27M07**	12-13305M	ARANDELA DE SEPARACIÓN	WASHER	RONDELLA DISTANZIALE	14
14	**REC93310-727V7**	29-13304M	COJINETE	BEARING	GABBIA A RULLI	2
15	**REC6F6-11631-00K**	761-9329T	PISTÓN (STD	PISTON STD	PISTONE (STD)	2
	REC6F6-11636-00K	761-9331T	PISTÓN (0.50mm O/S)	PISTON	PISTONE (0.50mm O/S)	2
16	**REC6F5-11610-00**	39-11768T	JUEGO DE AROS (STD)	RING SET STD	SET FASCE (STD)	2
	REC6F5-11610-10	39-11769M	JUEGO DE AROS (0.25mm O/S)	RING SET	SET FASCE (0.25mm O/S)	2
	REC6F5-11610-20	39-11770T	JUEGO DE AROS (0.50mm O/S)	RING SET	SET FASCE (0.50mm O/S)	2
17	**REC6F5-11633-00**	41-11771T	PASADOR, PISTÓN	PISTON PIN	SPINOTTO, PISTONE	2
18	**REC663-11634-00**	53-81264M	PRESILLA, BULÓN DE PISTÓN	CLIP PISTON PIN	CLIP SPINOTTO PISTONE	4
19	**REC93603-21111**	29-82353M	COJINETE	PIN ROLLER BEARING	PERNO PASSANTE	56
20	**REC90201-20417**	12-81831M	ARANDELA PLANA	FLAT WASHER	RONDELLA PIANA	4

40HP LIGHTNING / XR / MXL MARATHON (INTER.) 50HP MH

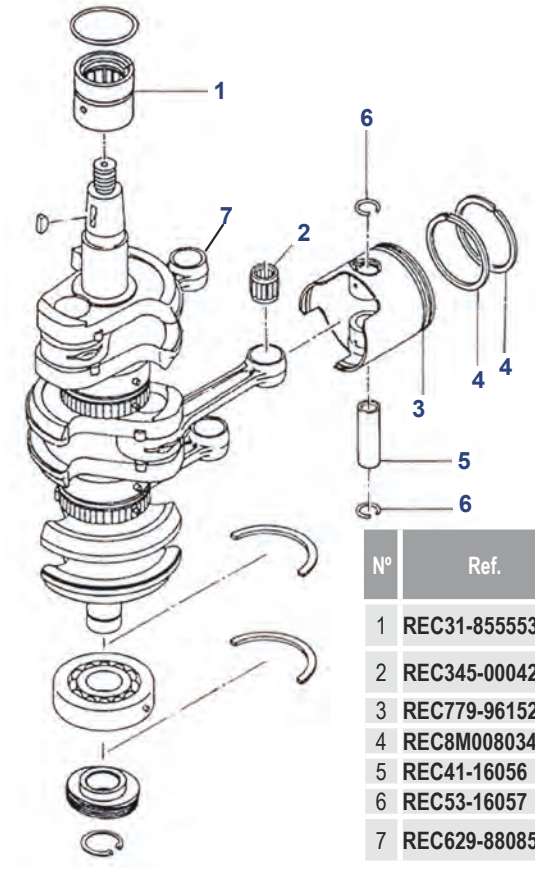

Nº	Ref.	R.O. OEM	Descripción	Description	Descrizione	Cantidad Quanty Quantità
1	**REC31-855553**	31-855553	RODAMIENTO SUP.	MAIN BEARING UPPER	CUSCINETTO SUPERIORE	1
2	**REC345-00042-0**	345-00042-0	COJINETE DE AGUJA	NEEDLE BEARING	CUSCINETTO	3
3	**REC779-96152**	779-96152	PISTÓN STD	PISTON STD	PISTONE STD	3
4	**REC8M0080349**	8M0080349	AROS	PISTON RING	FASCE	3
5	**REC41-16056**	41-80368003	PIN	PISTON PIN	SPINOTTO	3
6	**REC53-16057**	53-16057	CLIP	CLIP	CLIP	6
7	**REC629-880855**	629-880855	BIELA	CONNECTING ROD	BIELLA	3

50/60 JET 40/45 (3 CYL) 40 JET (OP094500+), 45 JET (9973100-OP094499), 55HP (3CYL) (9973100+), 60HP (3 CYL) (9973100+), 60HP (3 CYL) BIGFOOT (9973100-OP325499)

Ref.	R.O.
REC27-812867A97	27-812867A97



Kit juntas
Gasket kit
Kit guarnizione

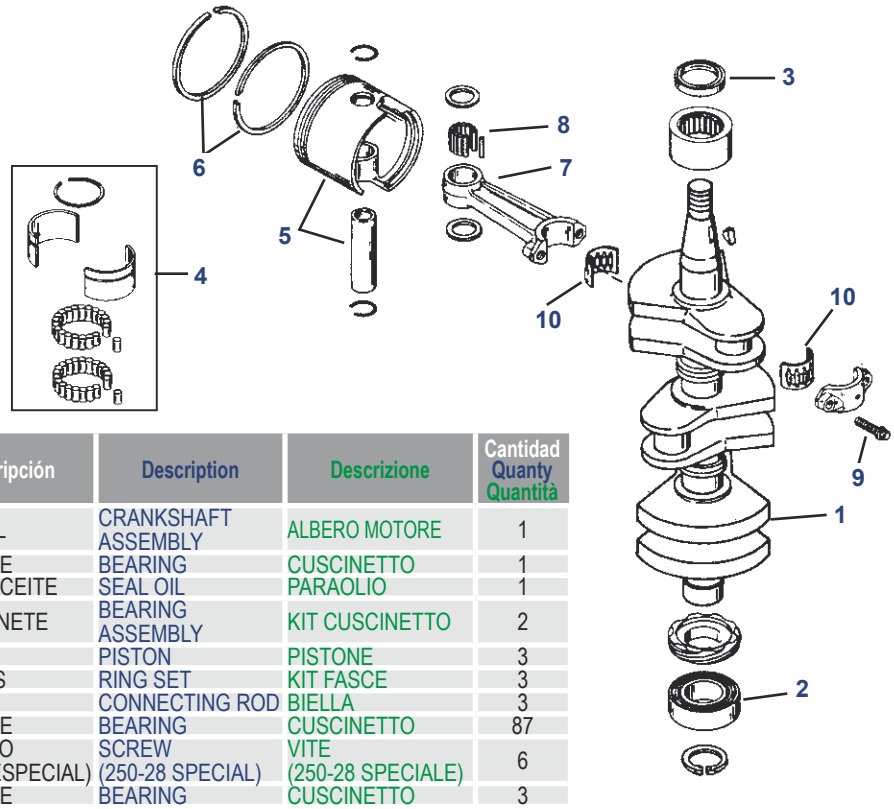

Nº	Ref.	R.O. OEM	Descripción	Description	Descrizione	Cantidad Quanty Quantità
1	**REC2411-827954T2**	827954T	CIGÜEÑAL	CRANKSHAFT ASSEMBLY	ALBERO MOTORE	1
2	**REC377139**	63742T	COJINETE	BEARING	CUSCINETTO	1
3	**REC26-8173971**	817397 1	RETÉN ACEITE	SEAL OIL	PARAOLIO	1
4	**REC827955A2**	827955A 2	KIT COJINETE	BEARING ASSEMBLY	KIT CUSCINETTO	2
5	**REC705-850026T1K**	850026T 1	PISTÓN	PISTON	PISTONE	3
6	**REC39-831255A6**	831255A 6	KIT AROS	RING SET	KIT FASCE	3
7	**REC640-9612A7**	9612A 6	BIELA	CONNECTING ROD	BIELLA	3
8	**REC29-47270**	47270	COJINETE	BEARING	CUSCINETTO	87
9	**REC10-91012**	91012	TORNILLO (250-28 ESPECIAL)	SCREW (250-28 SPECIAL)	VITE (250-28 SPECIALE)	6
10	**REC31-17514A2**	17514A 1	COJINETE	BEARING	CUSCINETTO	3

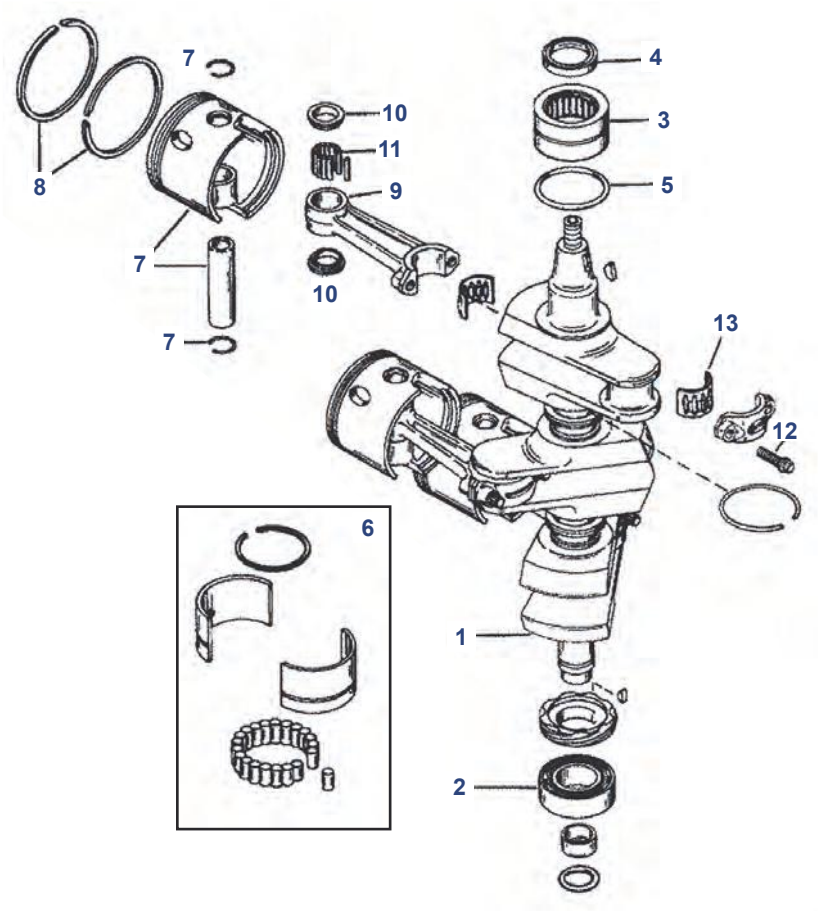

Ref.	R.O.
REC27-43004A99	27-43004A99, **A90**

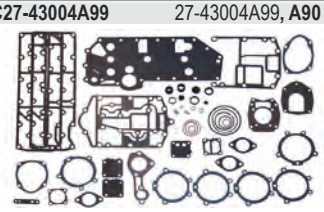

Kit juntas
Gasket kit
Kit guarnizione

Nº	Ref.	R.O. OEM	Descripción	Description	Descrizione	Cantidad Quanty Quantità
1	**REC493-827616T1**	827616T 1	CIGÜENAL	CRANKSHAFT	ALBERO MOTORE	1
2		43011T	RODAMIENTO	BALL BEARING, LOWER	CUSCINETTO	1
3	**REC31-43013T3**	43013T 3	RODAMIENTO	ROLLER BEARING	CUSCINETTO	1
4	**REC26-43993**	26-43993	RETÉN	SEAL OIL	PARAOLIO	1
5	**REC25-823683**	823683	ARO TÓRICO	O-RING	O-RING	1
6	**REC42943A1**	42943A 1	RODAMIENTO	ROLLER BEARING	CUSCINETTO	2
7	**REC2704-826191T4K**	826191T 4	PISTÓN	PISTON	PISTONE	3
8		822321A12	KIT AROS	RING KIT STD	FASCE	3
9	**REC646-818845T6**	818846T 6	BIELA	CONNECTING ROD	BIELLA	3
10	**REC12-8M0012298**	812876	ARANDELA	WASHER	RONDELLA	6
11	**REC29-818391001**	818391	RODAMIENTO	NEEDLE BEARING	SPINOTTO	5
12	**REC10-94320**	94320	TORNILLO	SCREW	VITE	6
13	**REC31-43012A1**	43012A 1	RODAMIENTO	BEARING	CUSCINETTO	3

2 TIEMPOS STROKES

70 / 75 / 80 / 90 HP (3 CYL)
70 HP (9506481 - 9589038)
75 HP (9506481 - 9793576)
80 HP (9506481 - 9589038)
90 HP (9506481 - 9793576)

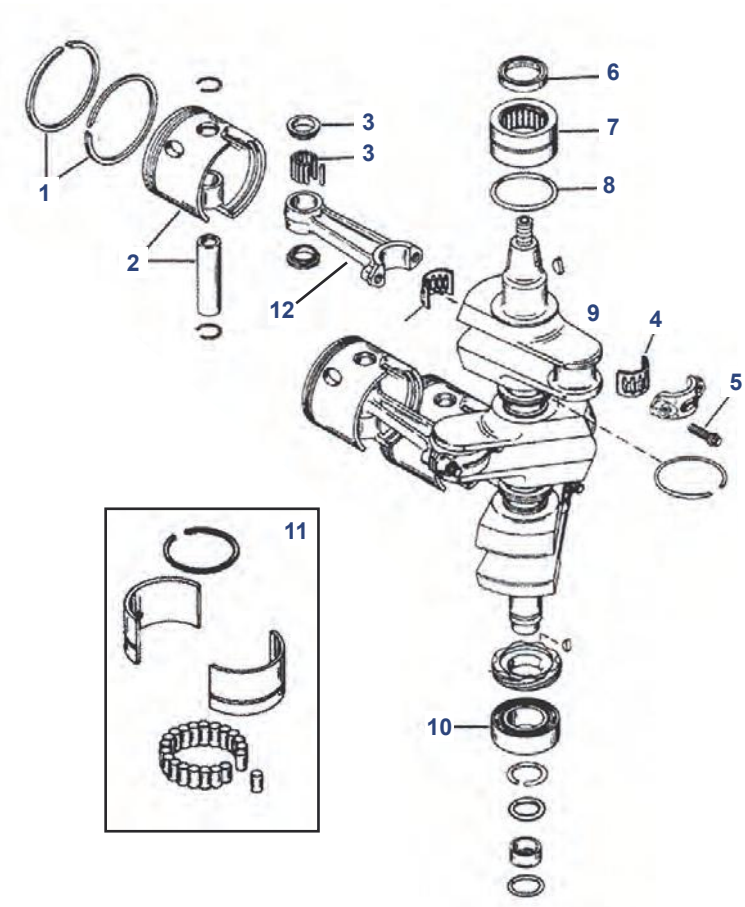

Ref.	R.O.
REC27-43004A99	27-43004A86, A90, **1**

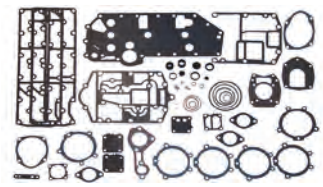

Kit juntas
Gasket kit
Kit guarnizione

Nº	Ref.	R.O. OEM	Descripción	Description	Descrizione	Cantidad Quanty Quantità
1		39-96170A12	KIT ARO PISTÓN STD	PISTON RING STD	FASCE PISTONE STD	3
1		39-96170A4	KIT ARO PISTÓN 0.30	PISTON RING 0.30	FASCE PISTONE 0.30	3
2	**REC777-9009T13**	774-9009A13	KIT PISTÓN STD	PISTON STD KIT	KIT PISTONE STD	3
2	**REC774-9137A11**	774-9137A11	KIT PISTÓN 0.30	PISTON 0.30 KIT	KIT PISTONE 0.30	3
3	**REC29-88258**	29-88258	AGUJA COJINETE	NEEDLE BEARING	SPINOTTO CUSCINETTO	87
4	**REC31-43012A1**	31-43012A1	COJINETE	BEARING	CUSCINETTO	3
5	**REC10-94320**	10-94320	TORNILLO (375-24x1.250")	SCREW (375-24x1.250")	VITE (375-24x1.250")	6
6	**REC26-43993**	26-43993	RETÉN SUPERIOR	UPPER SEAL	TENUTA SUPERIORE	1
7	**REC31-43013T3**	31-43013T3	COJINTE SUPERIOR	ROLLER BEARING	CUSCINETTO SUPERIORE	1
8	**REC25-823683**	25-64067	TÓRICOA	RING	O-RING	1
9		472-9001A3,A2	CIGÜEÑAL	CRAKSHAFT	ALBERO MOTORE	1
10		30-43011T	COJINETE INFERIOR	BEARING	CUSCINETTO INFERIORE	1
11	**REC42943A1**	42943A1	KIT COJINETE	ROLLER BEARING KIT	KIT CUSCINETTO	2
12	**REC638-9002A6**	838-9002A6	BIELA	CONNECTING ROD	BIELLA	3

75 / 90 HP 65 JET (3 CYL)
75 HP (9793577+), 90 HP (9793577+)
65 JET (9793577+)

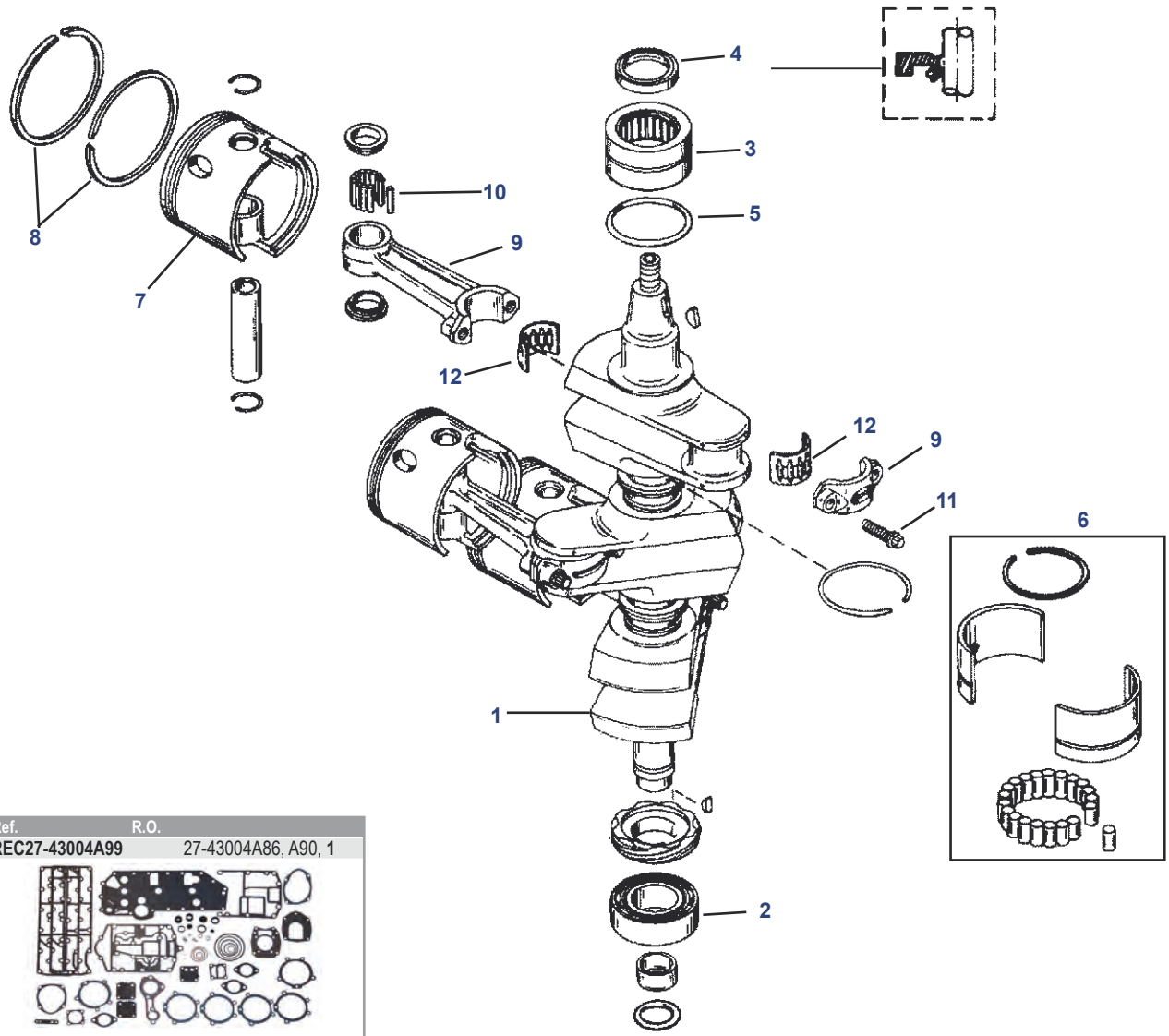

Ref.	R.O.
REC27-43004A99	27-43004A86, A90, 1

Kit juntas
Gasket kit
Kit guarnizione

Nº	Ref.	R.O. OEM	Descripción	Description	Descrizione	Cantidad Quanty Quantità
1	**REC493-827616T1**	827616T 1	CIGÜEÑAL	CRANKSHAFT	ALBERO MOTORE	1
2		43011T	COJINETE INFERIOR	BEARING LOWER	CUSCINETTO INFERIORE	1
3	**REC31-43013T3**	43013T 3	COJINETE SUPERIOR	BEARING UPPER	CUSCINETTO SUPERIORE	1
4	**REC26-43993**	43993	RETÉN ACEITE	SEAL OIL	PARAOLIO	1
5	**REC25-823683**	823683	ARO	O-RING	O-RING	1
6	**REC42943A1**	42943A 1	KIT COJINETE	BEARING SET	KIT CUSCINETTO	2
7	**REC2704-826191T4K**	826191T 4	PISTÓN STD	PISTON STD	PISTONE STD	3
7	**REC2704-821896A4**	821896A 4	PISTÓN 0.30	PISTON 0.30	PISTONE 0.30	3
8		822321A12	KIT AROS STD	RING KIT STD	KIT FASCE STD	3
8	**REC39-822321A2**	822321A 2	KIT AROS 0.30	RING KIT 0.30	KIT FASCE 0.30	3
9	**REC646-818845T6**	818846T 6	BIELA	CONNECTING ROD	BIELLA	3
10	**REC29-818391001**	818391001	COJINETE DE AGUJA	BEARING NEEDLE	CUSCINETTO SPINOTTO	87
11	**REC10-94320**	94320	TORNILLO (375-24 X 1.250)	SCREW (375-24 X 1.250)	VITE (375-24 X 1.250)	6
12	**REC31-43012A1**	43012A 1	KIT COJINETE	BEARING	KIT CUSCINETTO	3

BOMBA DE ACEITE
OIL PUMP
POMPA OLIO

Ref.	R.O. / OEM
PAF8-05030300	834967T03

MOTORES / ENGINES / MOTORI
8, 9.9 HP (209 cc)
(4 T / 4 Stroke / 4 Tempi)



Ref.	R.O. / OEM
PAF8-05030012	27-853523001

MOTORES / ENGINES / MOTORI
8, 9.9 HP (209 cc)
(4 T / 4 Stroke / 4 Tempi)



Ref.	R.O. / OEM
PAF15-07040500	834967A1

MOTORES / ENGINES / MOTORI
8 HP (Bodensee) (4 T / 4 Stroke / 4 Tempi) (inter.)
9.9 HP (323cc) (4 T / 4 Stroke / 4 Tempi)
13.5 HP (4 T / 4 Stroke / 4 Tempi) (inter.)
15 HP (4 T / 4 Stroke / 4 Tempi)



Ref.	R.O. / OEM
PAF15-07040016	27-853523

MOTORES / ENGINES / MOTORI
8 HP (Bodensee) (4 T / 4 Stroke / 4 Tempi) (inter.)
9.9 HP (323cc) (4 T / 4 Stroke / 4 Tempi)
13.5 HP (4 T / 4 Stroke / 4 Tempi) (inter.)
15 HP (4 T / 4 Stroke / 4 Tempi)



Ref.	R.O. / OEM
PAF25-05050400	852388T1

MOTORES / ENGINES / MOTORI
25 HP (4 T / 4 Stroke / 4 Tempi)

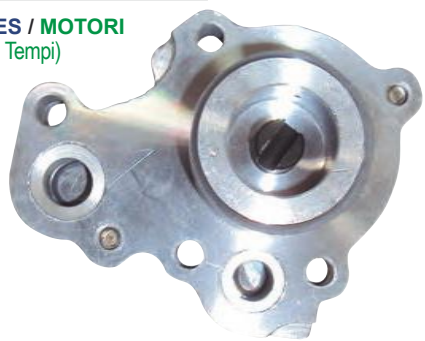

PISTONES, AROS, BULONES Y RODAMIENTOS
PISTONS, RINGS, PINS AND BEARINGS
PISTONI, FASCE, BULLONI E CUSCINETTI

RECmar® La gama de pistones RECMAR®, se suministra siempre como kit, compuesto por pistón, aros, bulón y clips. Eventualmente las referencias antiguas sufren cambios de numeración. En caso de duda contacten con nuestros técnicos comerciales.
The RECMAR® piston assortment is allways supplied as a set (piston, rings, pins and bearings). Old references may change. In case of any doubt contact our technicians.
La gamma dei pistoni RECMAR®, si vende sempre come kit, composto da pistoni, fasce, bulloni e clips. Le referenze vecchie avranno un cambio di numerazione. In caso di dubbi contattare i nostri tecnici commerciali.



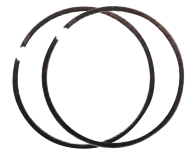

Ref.	R.O.		
PAF8-05020101	700-834963A02	Kit Pistón/ Piston kit/ Kit Pistoni	STD
PAF8-05020105	41-825713001	Bulón / Pin / Bullone	
PAF8-05020102	39-8M0055809	Aros / Rings / Fasce	
PAF15-07020005	53-16057	Clip	

MOTORES / ENGINES / MOTORI
8 HP (209 cc) (4 T / 4 Stroke / 4 Tempi)
9.9 HP (209 cc) (4 T / 4 Stroke / 4 Tempi)



Ref.	R.O.		
PAF15-07020001	700-834963	Kit Pistón/ Piston kit/ Kit Pistoni	STD
PAF15-07020006	41-825713	Bulón / Pin / Spinotto	
REC66N-11603-00		Aros / Rings / Fasce	
PAF15-07020005	53-82345M	Clip	

MOTORES / ENGINES / MOTORI
8 HP (Bodensee) (4 T / 4 Stroke / 4 Tempi) (inter.)
9.9 HP (323cc) (4 T / 4 Stroke / 4 Tempi)
13.5 HP (4 T / 4 Stroke / 4 Tempi) (inter.)
15 HP (4 T / 4 Stroke / 4 Tempi)



Ref.	R.O.		
PAF25-05020100	713-856064A1	Kit Pistón/ Piston kit/ Kit Pistoni	STD
PAF25-05020105	41-825016	Bulón / Pin / Spinotto	
REC67C-11603-00		Aros / Rings / Fasce	
PAF25-05020106	40-825017	Clip	

MOTORES / ENGINES / MOTORI
25 - 60 HP (2, 3 & 4 cyl) (4 T / 4 Stroke / 4 Tempi)
Carb & EFI



Ref.	R.O.		
WI3183PS	767-879878T5	Kit Pistón/ Piston kit/ Kit Pistoni	**STD**
REC93450-13022	93450-13022	Clip	

MOTORES / ENGINES / MOTORI
Ø 65 mm / 2.562" STD

2 cyl (USA 0G202750 / EURO 9855587+)
15 HP SEA PRO, XD, SUPER 15
20 HP / JET
25 HP SEA PRO / MARATHON



Ref.	R.O.		
WI3182P2		Kit Pistón/ Piston kit/ Kit Pistoni	**0.20**
REC93450-13022	93450-13022	Clip	

MOTORES / ENGINES / MOTORI
Ø 65 mm / 2.562" STD

2 cyl (USA 0G202749 / EURO 98555868+)
15 HP SEA PRO
15 HP SEA PRO XD / SUPER 15
20 HP / JET
25 HP SEA PRO / MARATHON



Ref.	R.O.		
REC705-850026T1K	705-850026A3	Kit Pistón/ Piston kit/ Kit Pistoni	**STD**
WI3179P3		Kit Pistón/ Piston kit/ Kit Pistoni	**0.30**
REC39-821695A4	39-821695A4	Aros / Rings / Fasce	**STD**
REC29-47270	29-47270	Rodamientos / Bearing / Cuscinetto	

MOTORES / ENGINES / MOTORI
Ø 76 mm / 2.993" STD

2 cyl
30 HP (1994-02)
30 JET (1998-02)

3 cyl
40 HP (1997-02)
50 HP (1998-02)
55 HP (1998-02)
60 HP (1998-02)



Ref.	R.O.		
REC780-9229A7	780-9229A7	Kit Pistón/ Piston kit/ Kit Pistoni	**STD**
REC39-18653A12	39-18653A12	KIT Aros / Rings / Fasce	**STD**

MOTORES / ENGINES / MOTORI
Ø 65 mm / 2.565" STD
Modelos / models / Modelli: Crossflow

4 cyl en línea / Inline / in rete
30 JET (1998-02)
40 HP (1990-97)
45 HP (1985-89)
50 HP (1970-85)



Ref.	R.O.		
REC774-9137A11	774-9137A11	Kit Pistón/ Piston kit/ Kit Pistoni	**0.30**
REC39-817096A6	39-817096A6	KIT Aros / Rings / Fasce	**STD**

MOTORES / ENGINES / MOTORI
Ø 73 mm / 2.875" STD
Modelos / models / Modelli: Crossflow

2 cyl
35 HP (1984-89)
40 HP (1972-83)

3 cyl
40 HP (1990-97)
50 JET (1984-90)
50 HP / 60 HP (1984-90)
70 HP (1977-83)

4 cyl
en línea / Inline / in rete
75 HP (1984-86)
80 HP (1978-83)
85 HP (1973-77)

6 cyl
en línea / Inline / in rete
90 HP (1978-86)
115 HP (1984-88)
135 HP (1970-71)
140 HP (1978-80)
150 HP (1973-78)



Ref.	R.O.		
REC783-9613A1K	783-9613T1	Kit Pistón/ Piston kit/ Kit Pistoni	**STD**
REC783-9613T3	783-9613T3	Kit Pistón/ Piston kit/ Kit Pistoni	**0.30**
REC39-19721A6	39-19721A6	KIT Aros / Rings / Fasce	**STD**
REC29-47270	29-47270	Rodamientos / Bearing / Cuscinetto	

MOTORES / ENGINES / MOTORI
Ø 76 mm / 2.993" STD
Modelos / models / Modelli: Crossflow

3 cyl
45 JET (1984-90)
50 HP / 55 HP / 60 HP (1998-02)



Ref.	R.O.		
REC2704-826191T4K	2704-826191A4	Kit Pistón/ Piston kit/ Kit Pistoni	**STD**
REC2704-821896A4	2704-821896A4	Kit Pistón/ Piston kit/ Kit Pistoni	**0.30**
REC39-822321A2	39-822321A2	KIT Aros / Rings / Fasce	**0.30**
REC29-818391001	29-818391	Rodamientos / Bearing / Cuscinetto	

MOTORES / ENGINES / MOTORI
Ø 88.9 mm / 3.500" STD
Modelos / models / Modelli: LoopCharge

3 cyl
65 / 80 JET (1994-98)
75 / 90 HP (1994-04)

4 cyl
100 HP (1994-01)
115 HP (1994-04)
125 HP (1994-04)



Ref.	R.O.		
REC777-9009T13	777-9009T13	Kit Pistón/ Piston kit/ Kit Pistoni	**STD**
REC777-9009A7	777-9009A7	Kit Pistón/ Piston kit/ Kit Pistoni	**0.30**
	39-96170A12	KIT Aros / Rings / Fasce	**STD**
REC29-88258	29-88258	Rodamientos / Bearing / Cuscinetto	

MOTORES / ENGINES / MOTORI
Ø 85 mm / 3.375" STD
Biela / Connecting Rod / Biella: 638-8532-1.
Modelos / models / Modelli: LoopCharge

3 cyl
70 HP (1987-89)
75 HP (1990-93)
80 HP (1987-89)
90 HP (1987-93)

4 cyl
100 HP (1989-93)
115 HP (1989-93)



Ref.	R.O.		
REC777-815965A4	777-815965A4	Kit Pistón/ Piston kit/ Kit Pistoni	**STD**
REC777-815965A6	777-815965A6	Kit Pistón/ Piston kit/ Kit Pistoni	**0.30**
	39-96170A12	KIT Aros / Rings / Fasce	**STD**
REC29-818391001	29-818391	Rodamientos / Bearing / Cuscinetto	

MOTORES / ENGINES / MOTORI
Ø 85 mm / 3.375" STD
Biela / Connecting Rod / Biella: 646-818846.
Modelos / models / Modelli: LoopCharge

3 cyl
70 HP (1987-89)
75 HP (1990-93)
80 HP (1987-89)
90 HP (1987-93)

4 cyl
100 HP (1989-93)
115 HP (1989-93)



Ref.	R.O.		
REC765-7442T36	765-7442T36	Kit Pistón/ Piston kit/ Kit Pistoni	**PORT STD**
REC765-7446T12	765-7446T12	Kit Pistón/ Piston kit/ Kit Pistoni	**PORT 0.30**
REC765-7441T36	765-7441T36	Kit Pistón/ Piston kit/ Kit Pistoni	**STBD STD**
REC765-7445A12	765-7445A12	Kit Pistón/ Piston kit/ Kit Pistoni	**STBD 0.30**
REC29-67483	29-67483	Rodamientos / Bearing / Cuscinetto	

MOTORES / ENGINES / MOTORI
Ø 79 mm / 3.125" STD
Modelos / models / Modelli: LoopCharge V-6 60º

Mod.	Cyl.		Biela / Rod / Biella
V135	6	0A904646-0D081999	636-8118
V150	6	4868998-0D081999	636-8118
V150 XR2		468998-0A904645	
V175	6	4301235-6618750	



Ref.	R.O.		
REC785-9737T9	785-9737T9	Kit Pistón/ Piston kit/ Kit Pistoni	**PORT STD**
REC785-9738T9	785-9738T9	Kit Pistón/ Piston kit/ Kit Pistoni	**STBD STD**
REC14450		Kit Pistón/ Piston kit/ Kit Pistoni	**PORT 0.30**
REC14460		Kit Pistón/ Piston kit/ Kit Pistoni	**STBD 0.30**
REC39-822321A2	39-822321A12	Aros / Rings / Fasce	2 mm

MOTORES / ENGINES / MOTORI
Ø 88.9 mm / 3.500" STD / 3.530" 0.30
Estos pistones vienen con aros de 2 mm.
All pistons core with 2 mm.
Tali pistoni sono dotati di anelli di 2 mm.
Modelos / models / Modelli: LoopCharge V-6 60º

Mod.	Cyl.		Biela / Rod / Biella
V140 Jet	6	0G760300-0T178499	
XR6, MAGIII	6	0D082000-1B226999	
150 XRI	6	0D082000-0G303045	
175 XRI	6	0D000750-0G303045	
V175 2.5L	6	0D082000-0G960499	
200 XRI	6	0C291520-0G303045	
V200 2.5L	6	0D082000-1B226999	
V200 2.5L	6	0C291520-0D081999	644-818141
V200 EFI	6	0G303046-0T408999	644-818141



Ref.	R.O.		
REC765-7442T32	765-7442T32	Kit Pistón/ Piston kit/ Kit Pistoni	**PORT STD**
REC765-7446A11	765-7446A11	Kit Pistón/ Piston kit/ Kit Pistoni	**PORT 0.30**
REC765-7441T32	765-7441T32	Kit Pistón/ Piston kit/ Kit Pistoni	**STBD STD**
REC765-7445T11	765-7445T11	Kit Pistón/ Piston kit/ Kit Pistoni	**STBD 0.30**
REC29-822553	29-822553	Rodamientos / Bearing / Cuscinetto	

MOTORES / ENGINES / MOTORI
Ø 79 mm / 3.125" STD
Modelos / models / Modelli: LoopCharge V-6 60º

Mod.	Cyl.		Biela / Rod / Biella
V150 Jet	6	0G760299	
V135	6	0C239553-0T178499	
V135	6	0C239553-0T178499	644-818141
V140 Jet		0G760299+	
V150	6	0C239553-0G760299	644-818141



Ref.	R.O.		
REC766-8667T41	766-8667T41	Kit Pistón/ Piston kit/ Kit Pistoni	**PORT STD**
REC14355		Kit Pistón/ Piston kit/ Kit Pistoni	**PORT 0.30**
REC766-8666741	766-8666T41	Kit Pistón/ Piston kit/ Kit Pistoni	**STBD STD**
REC14365		Kit Pistón/ Piston kit/ Kit Pistoni	**PORT 0.30**
REC39-813011A12	39-813011A12	Aros / Rings / Fasce	**STD**
REC29-67483	29-67483	Rodamientos / Bearing / Cuscinetto	

MOTORES / ENGINES / MOTORI
Ø 85 mm / 3.375" STD
Modelos / models / Modelli: LoopCharge
V-6, XR4, MAG II

V175	6618751 - 0C239552
V100	5624878 - 0C219519
V200 EFI	9C100861 - 0C999999
V220	0B117316+
V225	5628028+



Ref.	R.O.		
REC2720-881054T10K	2720-881054T3	Kit Pistón/ Piston kit/ Kit Pistoni	**PORT STD**
REC2720-881055T10K	2720-881055T3	Kit Pistón/ Piston kit/ Kit Pistoni	**STBD STD**
REC29-88258	29-88258001	Rodamientos / Bearing / Cuscinetto	

MOTORES / ENGINES / MOTORI
200 / 225 HP 3.0L DFI-DTS



COJINETE
BEARING
CUSCINETTO

COJINETE PIE DE BIELA
CONNECTING ROAD FOOT, BEARING
CUSCINETTO BIELLA

Ref.	R.O. / OEM
REC31-16052	31-16052

MOTORES / ENGINES / MOTORI
4 - 18 HP



COJINETE CABEZA DE BIELA
CONNECTING ROAD HEAD, BEARING
CUSCINETTO BIELLA

Ref.	R.O. OEM	Ø	Agujas Needle Aghi	Jaula Cage Gabbia
REC31-43012A1	31-43012A1, A2	1.4063"	16	Metal / Metallo

MOTORES / ENGINES / MOTORI
60 - 250HP



Ref.	R.O. / OEM
REC31-8130482	31-813048 2

MOTORES / ENGINES / MOTORI
25 / 30 / 40 HP (Inter.)



Ref.	R.O. / OEM
REC31-17514A2	8M0045428

MOTORES / ENGINES / MOTORI
30 - 60 HP
V-135 - V200 / XR-6



Ref.	R.O. / OEM
REC827955A2	827955A2

MOTORES / ENGINES / MOTORI
30 - 60 HP



Ref.	R.O. / OEM
REC42943A1	42943A1

MOTORES / ENGINES / MOTORI
70 - 115 HP



AGUJAS DE COJINETE
NEEDLE BEARING
AGHI CUSCINETTO

REF.	R.O. OEM	L +0 -0.008	D Ø +0 -0.002
REC29-47270	29-47270	41/64"	3/32"
REC29-67483	29-67483	51/64"	3/32"
REC29-71422-1	29-71422-1	39/64"	5/32"
REC29-818391001	29-818391 818391001	59/64"	3/32"
REC29-822553	29-822553	45/64"	3/32"
REC29-88258	29-88258	1-1/32"	3/32"

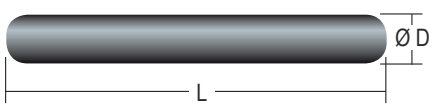

KITS COJINETE
CAGED BEARING KITS
KITS CUSCINETTO

Ref.	R.O. OEM	Ø	Agujas Needle Aghi	Jaula Cage Gabbia
REC31-17514A2	31-17514A1, A2	1.1825" 30 mm	16	Metal / Metal / Metallo
REC31-8036752	31-803675 2			
REC31-879877A1	31-879877A1	0.875"	16	Metal / Metal / Metallo
REC31-62596A1	31-62596A1	1.125"	16	Metal / Metal / Metallo
REC378252	31-67445	1.375"	16	Metal / Metal / Metallo
REC5007190	31-88269T	2.1875"	16	Plástico / Plastic / Plastica



REC31-17514A2



REC31-8036752



REC5007190



REC31-879877A1
REC31-62596A1



REC378252

Ref.	R.O. OEM	Motores Engines Motori
REC31-813048	31-813048	4 / 5 HP
REC31-16756A4	31-16756A4	
REC31-43013T3	31-43012T3	75 a / to 125 HP
REC31-74248T	31-74248T	



REC31-813048



REC31-16756A4
REC31-74248T
REC31-43013T3

GUÍA BIELAS, CIGÜEÑAL Y PISTÓN
CONNECTING ROAD, CRANKSHAFT & PISTON GUIDE
GUIDA BIELLE, ALBERO MOTORE E PISTONE

MODELO MODEL MODELLO	SERIE SERIAL SERIE	BIELA CONNEC. ROAD BIELLA	CIGÜEÑAL CRANKSHAFT ALBERO MOTORE	PISTÓN PISTON PISTONE
8 Bodensee (Inter.)	OP086824 - OP4000999	**PAF15-07020100**	**PAF15-07030000**	**PAF15-07020001**
8 & 9.9 (209cc)	OP325500 +	**PAF8-05020200**	**PAF8-05020001**	**PAF8-05020101**
9.9 (323cc)	OP075166 - OP400999	**PAF15-07020100**	**PAF15-07030000**	**PAF15-07020001**
13.5 (Inter.)	OP134638 +	**PAF15-07020100**	**PAF15-07030000**	**PAF15-07020001**
15.	9973100 +	**PAF15-07020100**	**PAF15-07030000**	**PAF15-07020001**
25.	9973100 +	**PAF25-05020200**	**PAF25-05020001**	**PAF25-05020100**

GUÍA BIELAS, CIGÜEÑAL Y PISTÓN
CONNECTING ROAD, CRANKSHAFT & PISTON GUIDE
GUIDA BIELLE, ALBERO MOTORE E PISTONE

MODELO MODEL MODELLO	SERIE SERIAL SERIE	BIELA CONNEC. ROAD BIELLA	CIGÜEÑAL CRANKSHAFT ALBERO MOTORE	PISTÓN PISTON PISTONE
4A	6E0-001011 +	REC6E0-11651-01		REC6E0-11631-00-98K
4/5	OP017000 +			REC779-9615T
4/5 (1 Cyl, JAPAN)	477830 - 9589153			REC779-9615T
6 & 8 (2 Cyl) (INTER.)	ON027903 +	REC629-8036741		REC779-804886
6 & 8 (2 Cyl) (INTER.)	ON055110 +	REC629-8036741		REC779-804886
8 SEAPRO (2 Cyl) (INTER.)	ON14717 +	REC629-8036741		REC779-804886
9.8 (2 Cyl) (INTER.)	ON007788 - ON055109	REC629-8036741		REC779-804886
9.8 SEAPRO (2 Cyl) (INTER.)	ON055110 +	REC629-8036741		REC779-804886
9.9 (2 Cyl) (INTER.)	ON059858 +	REC629-803674		REC779-803677T02
15 (2 Cyl) (INTER.)	ON001590 +	REC629-803674		REC779-803677
18 (2 Cyl) (INTER.)	ON001590 +	REC629-803674		REC779-803677
25 JET (2 Cyl) (INTER.)	ON088578 +	REC629-813047T01		REC779-879194T01
25 & 30 (2 Cyl) (INTER.)	ON055505 +	REC629-813047T01		REC779-879194T01
30 JET (3 Cyl)	9973100 +	REC640-9612A7		REC705-850026T1K
40 (INTER.)	ON056265 +	REC629-880855		REC779-96152
40 LIGHTNING (INTER.)	ON000001- ON056164	REC629-880855		REC779-96152
40 LIGHTNING XR (INTER.)	ON000513 +	REC629-880855		REC779-96152
40MXL SEAPRO	ON037781 - ON056164	REC629-880855		REC779-96152
40 (3 Cyl)	9973100 +	REC640-9612A7		REC705-850026T1K
40 JET	OP094500 +	REC640-9612A7	REC2411-827954T2	REC705-850026T1K
45 JET	9973100 - OP094499	REC640-9612A7	REC2411-827954T2	REC705-850026T1K
50MH	ON056165 +	REC629-880855		REC779-96152
50 (3 Cyl)	9683055 - 9973099	REC640-9612A7		REC783-9613A1K
50 (3 Cyl)	9973100 +	REC640-9612A7		REC783-9613A1K
55 & 60 (3 Cyl)	9973100 +	REC640-9612A7	REC2411-827954T2	REC705-850026T1K
60 BIGFOOT (3 Cyl)	9973100 +	REC640-9612A7	REC2411-827954T2	REC705-850026T1K
65 & 80 JET	9793577 +	REC646-818845T6	REC493-827616T1 (NOT 80HP)	REC2704-826191T4K
75 & 90 (3 Cyl)	9483121 - 9793576 (638-8532-1)	REC638-9002A6		REC777-9009T13
75 & 90 (3 Cyl)	9483121 - 9793576 (646-818846)	REC646-818845T6		REC777-815965A4
75 & 90 (3 Cyl)	9793577 +	REC646-818845T6	REC493-827616T1	REC2704-826191T4K
100 & 115 (4 Cyl)	9523034 - 9793576 (638-8532-1)	REC638-9002A6		REC777-9009T13
100 & 115 (4 Cyl)	9523034 - 9793576 (646-818846)	REC646-818845T6		REC777-815965A4
100 (4 Cyl)	9793577 - OP058999	REC646-818845T6		REC2704-826191T4K
115 & 125 (4 Cyl)	9793577 +	REC646-818845T6		REC2704-826191T4K

GUÍA DE PISTONES USA
USA PISTON GUIDE
GUIDA PISTONE USA

Modelo Model Modello 60° V6	Serie Serial Serie	PISTÓN / PISTON / PISTONE PORT		PISTÓN / PISTON / PISTONE STB		AROS / RING / FASCE	
		STD	0.30	STD	0.30	STD	0.30
V-105 Jet	OD082000+	REC765-7442T32	REC765-7446A11	REC765-7441T32	REC765-7445T11	REC39-93481A12	
V-135 Biela / Rod / Biella 636-8118	OA904646 - OD081999	REC785-9737T9	REC765-7446T12	REC765-7441T36	REC765-7445A12	REC39-93481A12	
V-135 Biela / Rod / Biella 644-818141	OA904646 - OD081999	REC765-7442T32	REC765-7446A11	REC765-7441T32	REC765-7445T11	REC39-93481A12	
V-135	OD082000+	REC765-7442T32	REC765-7446A11	REC765-7441T32	REC765-7445T11	REC39-93481A12	
V-140 Jet	0D082000+	REC785-9737T9	REC14450	REC785-9738T9	REC14460		
V-150 Biela / Rod / Biella 636-8118	OA904646 - OD081999	REC785-9737T9	REC765-7446T12	REC765-7441T36	REC765-7445A12	REC39-93481A12	
V-150 Biela / Rod / Biella 644-818141	OA904646 - OD081999	REC765-7442T32	REC765-7446A11	REC765-7441T32	REC765-7445T11	REC39-93481A12	
V-150	OD082000+	REC765-7442T32	REC765-7446A11	REC765-7441T32	REC765-7445T11	REC39-93481A12	
XR6/ MAGIII	OD082000+	REC785-9737T9	REC14450	REC785-9738T9	REC14460		
V-175	6618751 - OC239552	REC766-8667T41	REC14355	REC766-8666741	REC14365	REC39-813011A12	
V-175	4301235+	REC765-7442T36	REC765-7446T12	REC765-7441T36	REC765-7445A12	REC39-93481A12	
V-175	OD082000+	REC785-9737T9	REC14450	REC785-9738T9	REC14460		
V-200	4839034 - OC291519	REC766-8667T41	REC14355	REC766-8666741	REC14365	REC39-813011A12	
V-200 Biela / Rod / Biella 644-818141	OC291520 - OD081999	REC785-9737T9	REC14450	REC785-9738T9	REC14460		
V-200	OD082000+	REC785-9737T9	REC14450	REC785-9738T9	REC14460		
V-220 Laser	OB117316+	REC766-8667T41	REC14355	REC766-8666741	REC14365	REC39-813011A12	
V-225 (2.4L)	5628028+	REC766-8667T41	REC14355	REC766-8666741	REC14365	REC39-813011A12	

GUÍA DE PISTONES EUROPEOS
EUROPEAN PISTON GUIDE
GUIDA PISTONE EUROPEA

			PISTÓN / PISTON / PISTONE			AROS / RINGS / FASCE					BIELA / CONNECTING ROD / BIELLA	
HP	Cyl.	Serie Serial Serie	Ref. STD STD Ref. Ref. STD	R.O. STD STD OEM R.O. STD	Ref. 0.30 0.30 Ref. Ref. 0.30	Ref. STD STD Ref. Ref. STD	R.O. STD STD OEM R.O. STD	Ref. 0.30 0.30 Ref. Ref. 0.30	Clip Circlip Clip	Rodamiento Bearing Cuscinetto	REF.	Rodamiento Bearing Cuscinetto
4 / 5 HP	1	0P017000	REC779-9615T	779-9615T		REC8M0080357	8M0080357		REC53-16057	REC31-16052		REC31-813048
6 / 8 / 9.8 HP (Inter.)	2		REC779-804886	779-804886		REC39-803678A3	39-803678A3		REC41-8036801	REC31-8036752	REC629-8036741	
9.9 / 15 HP (Inter.)	2		REC779-803677T02	779-803677002		REC8M0080357	8M0080357		REC53-16057	REC31-16052	REC629-803674	
9.9 / 15C	2		REC6E7-11631-00K	761-7982M-T		REC682-11610-01	39-15320M		REC93450-15023	REC93602-14104		
15 SEA PRO XD SUPER 15	2	9855587+	WI3183PS	767-879878T5			39-827491A12					REC31-879877A1
18HP (Inter.)	2		REC779-803677	779-803677		REC39-803678A1	39-803678A1		REC53-16057	REC31-16052	REC629-803674	
20 JET	2	9855587+	WI3183PS	767-879878T5			39-827491A12					REC31-879877A1
25 SEA PRO MARATHON	2	9855587+	WI3183PS	767-879878T5			39-827491A12					REC31-879877A1
25 / 30 HP (Inter.)	2	062931+	REC779-879194T01	779-879194T01		REC39-16054A5	39-16054A5		REC53-16057	REC345-00042-0	REC629-813047T01	REC31-8130482
30A	2		REC689-11631-00K	761-8484M		REC689-11610-00	39-14235M		REC663-11634-00	REC93602-20M02	REC689-11651-00	REC93310-624U5
30, 40HP	2	9973100+	REC705-850026T3	705-850026A3		REC39-821695A4	39-821695A4			REC29-47270		REC31-17514A2
35.	2	9384476+		774-9137A9	REC774-9137A11	REC39-817096A6	39-817096A6			REC29-47270		
40 Lightning XR/MXL (Inter.)	3		REC779-96152	779-96152		REC8M0080349	8M0080349		REC53-16057	REC345-00042-0		
40 (40,402)	2	3339688+		774-9137A9	REC774-9137A11	REC39-817096A6	39-817096A6			REC29-47270		
40.	3	9973100+	REC705-850026T3	705-850026A3		REC39-821695A4	39-821695A4			REC29-47270	REC640-9612A7	REC31-17514A2
40 Aros / Rings / Fasce Keystone	4	9570790+	REC780-9229A7	780-9229A7		REC39-18653A12	39-18563A12					
45 Aros / Rings / Fasce Keystone	4	9248006+	REC780-9229A7	780-9229A7		REC39-18653A12	39-18563A12	REC39-18653A2				
50 (500) Aros / Rings / Fasce Keystone	4	9001581+	REC780-9229A7	780-9229A7		REC39-18653A12	39-18563A12	REC39-18653A2				
50.	3	9385111 - 9683054			REC774-9137A11	REC39-817096A6	39-817096A6			REC29-47270		
50.	3	9683055 - 9973099	REC783-9613A1K	783-9613A1	REC783-9613T3	REC39-19721A6	39-19721A6			REC29-47270		REC31-17514A2
50.	3	9973100+	REC705-850026T3	705-850026A3		REC39-821695A4	39-821695A4			REC29-47270		REC31-17514A2
55.	3	9683055 - 9973099	REC783-9613A1K	783-9613T1	REC783-9613T3	REC39-19721A6	39-19721A6			REC29-47270	REC640-9612A7	REC31-17514A2
55.	3	9973100+	REC705-850026T3	705-850026A3		REC39-821695A4	39-821695A4			REC29-47270		REC31-17514A2
60.	3	9385911 - 9683054		774-9137A9	REC774-9137A11	REC39-817096A6	39-817096A6			REC29-47270		
60.	3	9683055 - 9973099	REC783-9613A1K	783-9613T1	REC783-9613T3	REC39-19721A6	39-19721A6			REC29-47270	REC640-9612A7	REC31-17514A2
60.	3	9973100+	REC705-850026T3	705-850026A3		REC39-821695A4	39-821695A4			REC29-47270	REC640-9612A7	REC31-17514A2
65.	3	9020074 - 9135824			REC774-9137A11	REC39-817096A6	39-817096A6			REC29-47270		REC31-62596A1
70.	3	9135825 - 9385910			REC774-9137A11	REC39-817096A6	39-817096A6			REC29-47270		REC31-62596A1
70 Biela / Rod / Biella 683-8532-1	3	9483121+	REC777-9009T13	777-9009T13	REC777-9009A7		39-96170A12			REC29-88258		REC31-43012A1
70 Biela / Rod / Biella 646-8188461	3	9483121+	REC777-815965A4	777-815965A4	REC777-815965A6		39-96170A12			REC29-818391001	REC646-818845T6	REC31-43012A1
75.	4	9393856+			REC774-9137A11	REC39-817096A6	39-817096A6			REC29-47270		REC31-62596A1
75 Biela / Rod / Biella 638-8532-1	3	9589039 - 9793576	REC777-9009T13	777-9009T13	REC777-9009A7		39-96170A12			REC29-88258		REC31-43012A1
75 Biela / Rod / Biella 646-818846	3	9589039 - 9793576	REC777-815965A4	777-815965A4	REC777-815965A6		39-96170A12			REC29-818391001	REC646-818845T6	REC31-43012A1
75.	3	9793577+	REC2704-826191T4K	2704-826191A4	REC2704-821896A4		39-822321A12	REC39-822321A2		REC29-818391001	REC646-818845T6	REC31-43012A1
80 (800)	4	9177626 - 93933855		774-9137A9	REC774-9137A11	REC39-817096A6	39-817096A6			REC29-47270		REC31-62596A1
85 (850)	4	9011604 - 9177625		774-9137A9	REC774-9137A11	REC39-817096A6	39-817096A6			REC29-47270		REC31-62596A1
90 Biela / Rod / Biella 638-8532-1	3	9483121 - 9793576	REC777-9009T13	777-9009T13	REC777-9009A7		39-96170A12			REC29-88258		REC31-43012A1
90 Biela / Rod / Biella 646-818846	3	9483121 - 9793576	REC777-815965A4	777-815965A4	REC777-815965A6		39-96170A12			REC29-818391001	REC646-818845T6	REC31-43012A1
90.	3	9793577+	REC2704-826191T4K	2704-826191T4	REC2704-821896A4		39-822321A12	REC39-822321A2		REC29-818391001	REC646-818845T6	REC31-43012A1
100 Biela / Rod / Biella 638-8532-1	4	9523034 - 9793576	REC777-9009T13	777-9009T13	REC777-9009A7		39-96170A12			REC29-88258		REC31-43012A1

			PISTÓN / PISTON / PISTONE			AROS / RINGS / FASCE					BIELA / CONNECTING ROD / BIELLA	
HP	Cyl.	Serie Serial Serie	Ref. STD STD Ref. Ref. STD	R.O. STD STD OEM R.O. STD	Ref. 0.30 0.30 Ref. Ref. 0.30	Ref. STD STD Ref. Ref. STD	R.O. STD STD OEM R.O. STD	Ref. 0.30 0.30 Ref. Ref. 0.30	Clip Circlip Clip	Rodamiento Bearing Cuscinetto	REF.	Rodamiento Bearing Cuscinetto
100 Biela / Rod / Biella 646-818846	4	9523034 - 9593576	REC777-815965A4	777-815965A4	REC777-815965A6					REC29-818391001	REC646-818845T6	REC31-43012A1
100.	4	9793577+	REC2704-826191T4K	2704-826191T4	REC2704-821896A4		39-822321A12	REC39-822321A2		REC29-818391001	REC646-818845T6	REC31-43012A1
115 Biela / Rod / Biella 638-8532-1	4	9559771 - 9793576	REC777-9009T13	777-9009T13	REC777-9009A7					REC29-818391001		REC31-43012A1
115 Biela / Rod / Biella 646-818846	4	9559771 - 9593576	REC777-815965A4	777-815965A4	REC777-815965A6					REC29-818391001	REC646-818845T6	REC31-43012A1
115	4	9793577+	REC2704-826191T4K	2704-826191T4	REC2704-821896A4		39-822321A12	REC39-822321A2		REC29-818391001	REC646-818845T6	REC31-43012A1
125	4	0P017000+	REC2704-826191T4K	2704-826191T4	REC2704-821896A4		39-822321A12	REC39-822321A2		REC29-818391001	REC646-818845T6	REC31-43012A1
125 (1250)	6			774-9137A9	REC774-9137A11	REC39-817096A6	39-817096A6			REC29-47270		REC31-62596A1
135 (1350)	6			774-9137A9	REC774-9137A11	REC39-817096A6	39-817096A6			REC29-47270		REC31-62596A1
140 (1400)	6			774-9137A9	REC774-9137A11	REC39-817096A6	39-817096A6			REC29-47270		REC31-62596A1
150 (1500)	6			774-9137A9	REC774-9137A11	REC39-817096A6	39-817096A6			REC29-822553	REC644-818141A2	REC31-16756A6
200 & 225 (3.0L) DFI-DTS	6	PORT PISTON	REC2720-881054T10K	2720-881054T10						REC29-88258	REC647-822373A09	REC31-43012A1
200 & 225 (3.0L) DFI-DTS	6	ST D PISTON	REC2720-881055T10K	2720-881055T10						REC29-88258	REC647-822373A09	REC31-43012A1

AROS ESTANDAR PARA PISTONES
STANDARD PISTON RINGS
FASCE STANDARD PER PISTONI

HP	desde serie from serial della serie	hasta serie to serial alla serie	Biela Conn. rod Biella	Aros Rings Fasce	R.O. OEM
30 JET	9570790			**RM39-27841A12**	39-2784112
35	938476			**REC39-817096A6**	39-817096A6
40	9570790			**RM39-27841A12**	39-2784112
40		9973099		**REC39-817096A6**	39-817096A6
45	9248006	9466692		**RM39-27841A12**	39-2784112
50	9248006			**RM39-27841A12**	39-2784112
50		9683054		**REC39-817096A6**	39-817096A6
60		9683054		**REC39-817096A6**	39-817096A6
65		9135824		**REC39-817096A6**	39-817096A6
70		9385910		**REC39-817096A6**	39-817096A6
70	9483121		638-8532-1, 646-818846		39-96170A12
75	9589039	9793576	638-8532-1, 646-818846		39-96170A12
75 3 cyl	9793577				39-822321A12
80		9393855		**REC39-817096A6**	39-817096A6
85		9177625		**REC39-817096A6**	39-817096A6
90	9483121	9793576	638-8532-1, 646-818846		39-96170A12
90 3 cyl	9793577				39-822321A12
100	953034	9793576	638-8532-1, 646-818846		39-96170A12
105 JET	0D082000			**REC39-93481A12**	39-93481A12
115	5829464	5829463		**REC39-817096A6**	39-817096A6
115	9559771	9793576	638-8532-1, 646-818846		39-96170A12
115 4 cyl	9793577				39-822321A12
125		43253111		**REC39-817096A6**	39-817096A6
135		3293233		**REC39-817096A6**	39-817096A6
140	4865678	350805		**REC39-817096A6**	39-817096A6
150		5327662		**REC39-817096A6**	39-817096A6
V135	0A904646	0D819999	636-8118, 644-818141	**REC39-93481A12**	39-93481A12
V135	0D820000			**REC39-93481A12**	39-93481A12
V150	0A904646	0D819999	636-8118, 644-818141	**REC39-93481A12**	39-93481A12
XR4, MAGII	0C239553	0D081999			39-18487A12
V150	0D820000			**REC39-93481A12**	39-93481A12
V175	4301235	6618750		**REC39-93481A12**	39-93481A12
V175	805887			**REC39-93481A12**	39-93481A12
V175	6618751	0C239552		**REC39-813011A12**	39-813011A12
V175	0C239553	0D081999			39-18487A12
V200	4839034	6073191		**REC39-813011A12**	39-813011A12
V200	8061595	8065672		**REC39-813011A12**	39-813011A12
V200	6073197	0C291519		**REC39-813011A12**	39-813011A12
V200 LASER	0B117316			**REC39-813011A12**	39-813011A12
V225 2.4L	5628028			**REC39-813011A12**	39-813011A12

GUÍA COJINETES
BEARINGS APPLICATION
GUIDA CUSCINETTO

HP	AÑO YEAR ANNO	SERIE SERIAL SERIE	COJINETE CENTRAL CENTER BEARING CUSCINETTO CENTRALE	BIELA, PUNTA PEQUEÑA CONNEC. ROD, SAMLL END BIELLA, FINE PICCOLA	BIELA, PUNTA GRANDE CONNEC. ROD, BIG END BIELLA, FINE GRANDE
15 (Marathon Sea Pro)	1997-98	9927000 +			REC31-879877A1
15 (Super)	1994-98	9507381-9855586			REC31-879877A1
15 (Super)	1994-98	9855587 +			REC31-879877A1
18	1980-83	9308306-9378115			REC31-879877A1
18	1980-83	7200763-7207856			REC31-879877A1
18	1983 1/3	9378115-9415100			REC31-879877A1
18 (18XD)	1984-85	9378151-9467987			REC31-879877A1
18 XD	1984-85	9467988 +			REC31-879877A1
20 (20XD) (2-Cyl.)	1986-87	9415101-9467987			REC31-879877A1
20 (20XD) (2-Cyl.)	1986-87	9467988 +			REC31-879877A1
20 (20)	1988-94	9507381 +			REC31-879877A1
20 (20, 20 Jet) (2-Cyl.)	1994-98	9807909-9855586			REC31-879877A1
20 (20, 20 Jet) (2-Cyl.)	1994-98	9855587 +			REC31-879877A1
25	1980-83	9315316-9369470			REC31-879877A1
25 (2-Cyl.)	1983 1/2	9369471-9415100			REC31-879877A1
25 (XD)	1984-87	9415101-9467987			REC31-879877A1
25 (XD)	1988-94	9467988 +			REC31-879877A1
25 (25, 25 Sea Pro, 25 Marathon)	1988-94	9507381-9855586			REC31-879877A1
25 (25, 25 Sea Pro, 25 Marathon)	1994-98	9855587 +			REC31-879877A1
35 (2-Cyl.)	1984-86	9384476 +		REC29-47270	REC31-62596A1
40 (402)	1972-74	3339688-9076838		REC29-47270	REC31-62596A1
40 (402, 40)	1975-77	9076839-9251455		REC29-47270	REC31-62596A1
40 (2-Cyl.)	1980-83	9251456 +		REC29-47270	REC31-62596A1
40 (3-Cyl.)	1997-98	9973100 +		REC29-47270	REC31-17514A2
40 (4-Cyl.)	1989 +	9570790 +	REC29-71422-1		
45 (4-Cyl.)	1986	9248006 +	REC29-71422-1		
50	1976-79	9217256-9248005	REC29-71422-1		
50 (4-Cyl.)	1980-85	9248006 +	REC29-71422-1		
50 (3-Cyl.)	1991-95	9683055-9973099		REC29-47270	REC31-17514A2
50 (3-Cyl.)	1998	9973100 +		REC29-47270	REC31-17514A2
50 (3-Cyl.)	1986-87	9385911-9683054	REC29-71422-1	REC29-47270	REC31-62596A1
55 (3-Cyl.)	1996	9741042-9973099		REC29-47270	REC31-17514A2
55 (3-Cyl.)	1998	9973100 +		REC29-47270	REC31-17514A2
60 (3-Cyl.)	1984-87	9385911-9683054	REC29-71422-1	REC29-47270	REC31-62596A1
60 (3-Cyl.)	1991-95	9683055-9973099		REC29-47270	REC31-17514A2
60 (59 CID) (3-Cyl.)	1998	9973100 +		REC29-47270	REC31-17514A2
65 Jet	1994-98	9793577 +		REC29-818391001	REC31-43012A1
70 (3-Cyl.)	1977-79	9135825-9255130	REC29-71422-1	REC29-47270	REC31-62596A1
70 (3-Cyl.)	1980-83	9255131-9385910	REC29-71422-1	REC29-47270	REC31-62596A1
70 (3-Cyl.) (Biela / Rod / Biella 938-8532-1)	1987	9483121 +		REC29-88258	REC31-43012A1
70 (3-Cyl.) (Biela / Rod / Biella 638-818846)	1987	9483121 +		REC29-818391001	REC31-43012A1
75 (4-Cyl.)	1984-88	9393856 +	REC29-71422-1	REC29-47270	REC31-62596A1
75 (3-Cyl.) (Biela / Rod / Biella 638-8532-1)	1990-93	9589039-9793576		REC29-88258	REC31-43012A1
75 (3-Cyl.) (Biela / Rod / Biella 638-818846)	1990-93	9589039-9793576		REC29-818391001	REC31-43012A1
75 (3-Cyl.)	1994-98	9793577 +		REC29-818391001	REC31-43012A1
80 (80, 800) (4-Cyl.)	1978-79	9177626-9256130	REC29-71422-1	REC29-47270	REC31-62596A1
80 (80) (4-Cyl.)	1980-83	9256131-9393855	REC29-71422-1	REC29-47270	REC31-62596A1
80 (3-Cyl.) (Biela / Rod / Biella 638-8532-1)	1987	9483121-9589038		REC29-88258	REC31-43012A1
80 (3-Cyl.) (Biela / Rod / Biella 646-818846)	1987	9483121-9589038		REC29-818391001	REC31-43012A1
80 Jet	1994-98	9793577 +		REC29-818391001	REC31-43012A1
85 (850) (4-Cyl.)	1973-77	9011604-9053363	REC29-71422-1	REC29-47270	REC31-62596A1
85 (850) (4-Cyl.)	1973-77	9053364-9177625	REC29-71422-1	REC29-47270	REC31-62596A1
90 (3-Cyl.) (Biela / Rod / Biella 638-8532-1)	1987	9483121-9793576		REC29-88258	REC31-43012A1

HP	AÑO YEAR ANNO	SERIE SERIAL SERIE	COJINETE CENTRAL CENTER BEARING CUSCINETTO CENTRALE	BIELA, PUNTA PEQUEÑA CONNEC. ROD, SAMLL END BIELLA, FINE PICCOLA	BIELA, PUNTA GRANDE CONNEC. ROD, BIG END BIELLA, FINE GRANDE
90 (3-Cyl.) (Biela / Rod / Biella 646-818846)	1987	9483121-9793576		REC29-818391001	REC31-43012A1
90 (90) (3-Cyl.)	1994-98	9793577 +		REC29-818391001	REC31-43012A1
115 (4-Cyl.) (Biela / Rod / Biella 638-8532-1)	1988-93	9559771 +		REC29-88258	REC31-43012A1
115 (4-Cyl.) (Biela / Rod / Biella 646-818846)	1989-93	9559771 +		REC29-818391001	REC31-43012A1
115 (4-Cyl.)	1994-98	9793577 +		REC29-818391001	REC31-43012A1
125 (4-Cyl.)	1994-98	9793577 +		REC29-818391001	REC31-43012A1

CIGÜEÑAL
CRANKSHAFT
ALBERO MOTORE

RETENES
OIL SEALS
PARAOLIO

Ref.	R.O. / OEM
REC26-16977	26-16977
REC26-419533	26-41953 3
REC26-43993	26-43993
REC26-66301	26-66301
REC26-56397	26-56397
REC26-66302	26-66302
REC26-859093	26-815449
REC26-830898	26-830898


REC26-859093


REC26-16977


REC26-43993


REC26-66301


REC26-56397


REC26-66302


REC26-830898


REC26-419533

AROS TÓRICOS
O-RINGS
O-RING

Ref.	R.O. / OEM
REC25-20081	25-20081
REC308627	25-20826
REC25-80863	25-20863
REC553126	25-31305
REC25-33465	25-54029
REC25-823683	25-823683
REC25-32546	25-32546
REC25-62700	25-62700
REC25-62706	25-67207
REC335523	25-88955
REC25-90011	25-90011
REC25-89497	25-89497
REC310414	25-47254

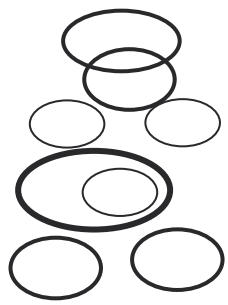

COJINETES
BEARINGS
CUSCINETTO

Ref.	R.O. OEM	Motores Engines Motori
REC31-16756A6	31-16756A6	V135 a / to V200 / XR6
REC30-160494	30-160494	9.9 / 15 / 18 HP International
REC30-16049	30-16049	2 / 2.5 / 3.5 HP 2 T / Strokes / Tempi
		4 / 5 / 6 / 8 / 9.8 HP 4 T / Strokes / Tempi
REC31-816773A2	31-816773A1	20 / 225 / 250 (3.0L) EFI / DFI
REC377139	30-63742T, 30-63742	
REC30-67923T	30-67923T, 30-67923	
REC30-64424T	30-64424T, 30-64424	
REC30-62567T	30-62567T	
REC31-812873A1	31-812873A1	45 JET, 502, 55, 60 (3 Cyl)


REC31-16756A6


REC30-16049
REC30-160494


REC31-816773A2


REC30-64424T


REC30-67923T


REC377139


REC30-62567T


REC31-812873A1

GUÍA CIGÜEÑAL
CRAMKSHAFT GUIDE
GUIDA ALBERO MOTORE

HP	Cyl.	Bel serie / Bel serial / Bel serie	RETENES / OIL SEAL / TENUTE		COJINETE / BEARING / CUSCINETTO
			SUPERIOR / UPPER / SUPERIORE	INFERIOR / LOWER / INFERIORE	SUPERIOR / UPPER / SUPERIORE
2.5HP, 3.5HP		0R131842+			REC30-16049
4 HP		0P401000+	REC26-803514	REC26-8537077	
5 HP		0P073456+	REC26-803514	REC26-8537077	
5 HP		0P073456+	REC26-803514	REC26-8537077	
8HP (209cc)		0P325500+	PAF8-05020001	PAF8-05020001	
8 HP Bodensee		0P086824 - 0P400999	PAF15-07030006	PAF15-07030007	
9.9HP (209cc)		0P325500+	PAF8-05020001	PAF8-05020001	
9.9HP (323cc)		0P075166 - 0P400999	PAF15-07030006	PAF15-07030007	
13.5HP (Intern.)		0P401000+	PAF15-07030006	PAF15-07030007	
15HP		9973100+	PAF15-07030006	PAF15-07030007	
25HP		9973100+	PAF25-05020003	PAF25-05020002	
30HP		0P017000+	PAF25-05020003	PAF25-05020002	
30HP Carb	3	0P153500 - 0P400999	PAF25-05020003	PAF25-05020002	
30HP EFI	3	0P153500 - 0P400999	PAF25-05020003	PAF25-05020002	
40HP		9944807+	PAF25-05020003	PAF25-05020002	
40HP Carb	3	0P153500+	PAF25-05020003	PAF25-05020002	
40HP	4	0P094500 - 0P206999	PAF25-05020003	PAF25-05020002	
40HP EFI	3	0P401000+	PAF25-05020003	PAF25-05020002	
40HP EFI	4	0P153500	PAF25-05020003	PAF25-05020002	
40HP ITALY	4	0P017000 - 0P094499	PAF25-05020003	PAF25-05020002	
45HP Bondesee		0P017000+	PAF25-05020003	PAF25-05020002	
50HP		9944807+	PAF25-05020003	PAF25-05020002	
50HP BIGFOOT		0P017000+	PAF25-05020003	PAF25-05020002	
50HP EFI	4	0P153500+	PAF25-05020003	PAF25-05020002	
50HP	4	0P094500 - 0P206999	PAF25-05020003	PAF25-05020002	
60HP	4	0P094500 - 0P206999	PAF25-05020003	PAF25-05020002	
60HP EFI	4	0P153500+	PAF25-05020003	PAF25-05020002	

GUÍA COJINETES, RETENES Y AROS TÓRICOS
BEARINGS, OIL SEALS & O-RINGS GUIDE
GUIDA CUSCINETTO, TENUTE E FASCE

HP	Cyl.	AÑO / YEAR / ANNO	País / Country / Paese	Bel serie / Bel serial / Bel serie	AROS TÓRICO / O-RINGS / FASCE		RETENES / OIL SEAL / TENUTE		COJINETE / BEARING / CUSCINETTO		
					SUPERIOR / UPPER / SUPERIORE	INFERIOR / LOWER / INFERIORE	SUPERIOR / UPPER / SUPERIORE	INFERIOR / LOWER / INFERIORE	SUPERIOR / UPPER / SUPERIORE	TRANSMISIÓN / TRANSMISSION / TRASMISSIONE	INFERIOR / LOWER / INFERIORE
3.6		1980-82	BEL	9252831 +	REC25-80863			REC26-56397			
4 (40)	1	1972-74	BEL	9000306-9072178	REC25-80863			REC26-56397		REC30-16049	
4	1	1982-86	BEL	9258281 +	REC25-80863			REC26-56397		REC30-16049	
4	1	1987-88	BEL	9477830 +						REC30-16049	
4 (40) (Gnat)	2	1976-79	BEL	9075839-9256980		REC25-62706					
4 (40)	2	1980-81	BEL	9256981 +		REC25-62706					
4.5 (4.5, 45)	1	1975-79	BEL	9072179-9258280	REC25-80863			REC26-56397			
4.5	1	1980-85	BEL	9258281 +	REC25-80863			REC26-56397			
5	1	1987-89	BEL	9477830 +						REC30-16049	
6		1986-93	BEL	9461526 +							
7.5 (7.5, 75)		1974-77	BEL	9043194 +	REC25-80863						
8		1986-93	BEL	9461526 +							
9.8 (9.8) (110)		1974-77	BEL	9041439 +	REC25-80863						
9.9		1986-93	BEL	9461526 +							
10 (XR10)		1990-93	BEL	9596000 +							
10 (Magnum, Sea Pro, Marathon)		1990-93	BEL	9596000 +							
15		1988-93	BEL	9542620 +							
15 (Sea Pro, XD, Marathon)		1997-98	BEL	9927000 +							
15 (Super)		1994-98	BEL	9507381 +							
18 (18, 18 XD)		1980-83	BEL	9308306 +							
20 (200, 20)		1973-77	BEL	9016254-9415100				REC26-66302		REC30-63326T	REC30-63326T

HP	Cyl.	AÑO YEAR ANNO	País Country Paese	Bel serie Bel serial Bel serie	AROS TÓRICO / O-RINGS / FASCE		RETENES / OIL SEAL / TENUTE		COJINETE / BEARING / CUSCINETTO		
					SUPERIOR UPPER SUPERIORE	INFERIOR LOWER INFERIORE	SUPERIOR UPPER SUPERIORE	INFERIOR LOWER INFERIORE	SUPERIOR UPPER SUPERIORE	TRANSMISIÓN TRANSMISSION TRASMISSIONE	INFERIOR LOWER INFERIORE
20 (20, 20XD)		1986-87	BEL	9415101 +							
25 (25, 25XD)	2	1980-83	BEL	9315316 +							
40 (402)	2	1972-74	BEL	3339688-9076838	REC310414		REC764337	REC764337			REC377139
40 (402, 40)	2	1975-77	BEL	9076839 +	REC310414	REC25-823683	REC764337	REC764337			REC377139
40	4	1989 +	BEL	9570790-9793444		REC25-32546	REC26-66301	REC764337		REC377139	REC377139
40	4	1989 +	BEL	9793445 +		REC25-32546	REC764337	REC764337		REC377139	REC377139
40	3	1997-98	BEL	9973100 +		REC25-896523		REC764337			REC377139
45	4	1986	BEL	9248006 +			REC764337	REC764337		REC377139	REC377139
50 (50, 500)	4	1971-74	BEL	9001581 +			REC764337	REC764337		REC377139	REC377139
50	3	1986-87	BEL	9385911-9683054		REC25-32546	REC764337	REC764337	REC30-64424T	REC30-64424T	
50	3	1991-95	BEL	9683055-9973099		REC25-896523		REC764337	REC31-812873A1		REC377139
50	3	1998	BEL	9973100 +		REC25-896523		REC764337			REC377139
55	3	1996	BEL	9683055-9973099		REC25-896523		REC764337	REC31-812873A1		REC377139
55	3	1998	BEL	9973100 +		REC25-896523		REC764337			REC377139
60	3	1984-87	BEL	9385911-9683054		REC25-32546	REC764337	REC764337	REC30-64424T	REC30-64424T	REC30-64424T
60	3	1991-95	BEL	9683055-9973099		REC25-896523	REC26-66301	REC764337	REC31-812873A1		REC377139
65 (650)	3	1973-76	BEL	9020074-9135824	REC310414	REC25-32546	REC764337	REC764337		REC30-64424T	REC30-64424T
70	3	1977-83	BEL	9135825-9385910		REC25-32546	REC764337	REC764337		REC30-64424T	REC30-64424T
70	3	1987	BEL	9483121-9506480	REC25-823683			REC764337	REC31-43013T3		
70	3	1988-89	BEL	9506481 +	REC25-823683	REC25-33465		REC764337	REC31-43013T3		
75	4	1984-88	BEL	9393856 +	REC310414	REC25-32546	REC764337	REC764337		REC30-62567T	REC377139
75	3	1990-93	BEL	9589039 +	REC25-823683			REC764337	REC31-43013T3		
80 (80, 800)	4	1978-79	BEL	9177626-9393855	REC310414	REC25-32546	REC764337	REC764337		REC30-62567T	REC377139
80	3	1987	BEL	9483121-9506480	REC25-823683			REC764337	REC31-43013T3		
80	3	1987	BEL	9506481 +	REC25-823683	REC25-33465		REC764337	REC31-43013T3		
85 (850)	4	1973-77	BEL	9011604-9177625	REC310414	REC25-32546	REC764337	REC764337		REC377139	REC377139
90	3	1987	BEL	9483121 +	REC25-823683			REC764337	REC31-43013T3		
100	4	1988-93	BEL	9523034-0P016999	REC25-823683		REC764337	REC764337	REC31-43013T3		
100 Retén superior redondo Round upper o-ring Tenuta superiore redonda	4	1994-98	BEL	0P017000 +	REC25-823683			REC764337	REC31-43013T3		
100 Retén superior cuadrado Square upper o-ring Tenuta superiore cuadrata	4	1994-98	BEL	0P017000 +				REC764337	REC31-43013T3		
115	4	1988-93	BEL	9559771-0P016999	REC25-823683			REC764337	REC31-43013T3		
115 Retén superior redondo Round upper o-ring Tenuta superiore redonda	4	1988-93	BEL	0P017000 +	REC25-823683			REC764337	REC31-43013T3		
115 Retén superior cuadrado Square upper o-ring Tenuta superiore cuadrata		1988-93	BEL	0P017000 +				REC764337	REC31-43013T3		
125	4	1994-98	BEL	9793577-0P016999	REC25-823683			REC764337	REC31-43013T3		
125 Retén superior redondo Round upper o-ring Tenuta superiore redonda	4	1994-98	BEL	0P017000+	REC25-823683			REC764337	REC31-43013T3		
125 Retén superior cuadrado Square upper o-ring Tenuta superiore cuadrata	4	1994-98	BEL	0P017000 +				REC764337	REC31-43013T3		
V-105 Jet		1996+	USA	0D082000 +	REC25-33465	REC25-62700	REC764337	REC764337	REC31-16756A4		REC30-67923T
V-135 Carb. 1.50 ID Rodamiento superior Upper bearing Cuscinetto superiore		1986-88	USA	0A904646-0C100860	REC25-33465	REC25-62700	REC764337	REC764337	REC31-74248T		REC30-67923T

HP	Cyl.	AÑO YEAR ANNO	País Country Paese	Bel serie Bel serial Bel serie	AROS TÓRICO / O-RINGS / FASCE		RETENES / OIL SEAL / TENUTE		COJINETE / BEARING / CUSCINETTO		
					SUPERIOR UPPER SUPERIORE	INFERIOR LOWER INFERIORE	SUPERIOR UPPER SUPERIORE	INFERIOR LOWER INFERIORE	SUPERIOR UPPER SUPERIORE	TRANSMISIÓN TRANSMISSION TRASMISSIONE	INFERIOR LOWER INFERIORE
V-135 Carb. 1.37 ID Rodamiento superior Upper bearing Cuscinetto superiore		1986-88	USA	0A904646-0C100860	REC25-33465	REC25-62700	REC764337	REC764337			REC30-67923T
V-135 Carb.		1989-90	USA	0C100861+	REC25-33465	REC25-62700	REC764337	REC764337	REC31-16756A4		REC30-67923T
V-135 Carb.		1991	USA	0C239553+	REC25-33465	REC25-62700	REC764337	REC764337	REC31-16756A4		REC30-67923T
V-135 DFI		1998	USA	0G590000+	REC25-33465	REC25-62700	REC764337	REC764337	REC31-16756A4		REC30-67923T
V-140 Jet		1994-95	USA	0D082000+	REC25-33465	REC25-62700	REC764337	REC764337	REC31-16756A4		REC30-67923T
V-150 (V-150 & V-1500) Carb.		1973-77	USA	4868998-0A904645		REC25-62700	REC764337	REC764337	REC31-74248T		REC30-67923T
V-150 Carb. 1.50 ID Rodamiento superior Upper bearing Cuscinetto superiore		1986-88	USA	0A904646-0C100860	REC25-33465	REC25-62700	REC764337	REC764337	REC31-74248T		REC30-67923T
V-150 Carb. 1.37 ID Rodamiento superior Upper bearing Cuscinetto superiore		1986-88	USA	0A904646-0C100860	REC25-33465	REC25-62700	REC764337	REC764337			REC30-67923T
V-150 Carb.		1989-90	USA	0C100861-0C239552	REC25-33465	REC25-62700	REC764337	REC764337			REC30-67923T
V-150 XR4, Magnum II		1988	USA	0B242885-0C239552	REC25-33465	REC25-62700	REC764337	REC764337			REC30-67923T
V-150 Carb.		1991	USA	0C239553+	REC25-33465	REC25-62700	REC764337	REC764337	REC31-16756A4		REC30-67923T
V-150 XR4, 6/Mag II, III		1991	USA	0C239553+	REC25-33465	REC25-62700	REC764337	REC764337	REC31-16756A4		REC30-67923T
V-150 EFI		1993-95	USA	0D082000+	REC25-33465	REC25-62700	REC764337	REC764337	REC31-16756A4		REC30-67923T
V-150 DFI		1998	USA	0G590000+	REC25-33465	REC25-62700	REC764337	REC764337	REC31-16756A4		REC30-67923T
V-175 (V-175, 1750) Carb.		1976-79	USA	4301235-5393736		REC25-89497	REC764337	REC764337	REC31-74248T		REC30-67923T
V-175 (V-175, 1750) Carb.		1976-79	AUS	8058870-8064249		REC25-89497	REC764337	REC764337	REC31-74248T		REC30-67923T
V-175 Carb.		1980-81	USA	5393737-6618750			REC764337	REC764337	REC31-74248T		REC30-67923T
V-175 Carb.		1980-81	AUS	8064250+			REC764337	REC764337	REC31-74248T		REC30-67923T
V-175 Carb.		1985-88	USA	6618751-0C239552	REC25-62706	REC25-62700	REC764337	REC764337			REC30-67923T
V-175 Carb.		1991	USA	0C239553+	REC25-33465	REC25-62700	REC764337	REC764337	REC31-16756A4		REC30-67923T
V-175 EFI		1991	USA	0D000750+	REC25-33465	REC25-62700	REC764337	REC764337	REC31-16756A4		REC30-67923T
V-200 (V-200, 2000) Carb.		1978-79	USA	4839034-05363917		REC25-89497	REC764337	REC764337	REC31-74248T		REC30-67923T
V-200 Carb.		1980-81	USA	05363918-6073191			REC764337	REC764337	REC31-74248T		REC30-67923T
V-200 Carb.		1980-81	AUS	8061595-8065672			REC764337	REC764337	REC31-74248T		REC30-67923T
V-200 Carb.		1982-90	USA	6073192-0C291519	REC25-33465	REC25-62700	REC764337	REC764337			REC30-67923T
V-200 Carb.		1991	USA	0C291520+	REC25-33465	REC25-62700	REC764337	REC764337	REC31-16756A4		REC30-67923T
V-200 EFI		1989-90	USA	0C100861-0C291519	REC25-33465	REC25-62700	REC764337	REC764337			REC30-67923T
V-200 EFI		1991	USA	0C291520+	REC25-33465	REC25-62700	REC764337	REC764337	REC31-16756A4		REC30-67923T
V-200 DFI		1997	USA	0G386496+	REC25-823683	REC25-62700	REC26-830898	REC26-830898	REC31-816773A2		REC30-67923T
V-200 Laser		1987-88	USA	0B117316+	REC25-33465	REC25-62700	REC764337	REC764337			REC30-67923T
V-225 (2.4L)		1980-81	USA	5628028+		REC25-62700	REC764337	REC764337			REC30-67923T
V-225(3.0L)Carb. Sea Pro,Marathon		1994-98	USA	0G245605-0G303045	REC25-823683	REC25-62700		REC26-859093	REC31-816773A2		REC30-67923T
V-225(3.0L)Carb. Sea Pro,Marathon		1994-98	USA	0G303046+	REC25-823683	REC25-62700	REC26-830898	REC26-830898	REC31-816773A2		REC30-67923T
V-225 DFI		1998	USA	0G590000+	REC25-823683	REC25-62700	REC26-830898	REC26-830898	REC31-816773A2		REC30-67923T
V-225 EFI		1995-98	USA	0G129222-0G303045	REC25-823683	REC25-62700		REC26-859093	REC31-816773A2		REC30-67923T
V-225 EFI		1995-98	USA	0G303046+	REC25-823683	REC25-62700	REC26-830898	REC26-830898	REC31-816773A2		REC30-67923T
V-250 Carb.		1989-94	USA	0C101891+	REC25-823683	REC335523					
V-250 Carb. Montaje de rodamiento superior Upper bearing fitting Montaggio cuscinetto superiore		1989-94	USA	0C101891+	REC25-823683	REC335523			REC31-816773A2		
V-250 EFI		1995-98	USA	0G129222-0G303045	REC25-823683	REC25-62700		REC26-859093	REC31-816773A2		REC30-67923T
V-250 EFI		1995-98	USA	0G303046+	REC25-823683	REC25-62700	REC26-830898	REC26-830898	REC31-816773A2		REC30-67923T
V-275 Carb.		1989-94	USA	0C101891+	REC25-823683	REC335523					
V-275 Carb. Montaje de rodamiento superior Upper bearing fitting Montaggio cuscinetto superiore		1989-94	USA	0C101891+	REC25-823683	REC335523			REC31-816773A2		
V-300 / 3.4L		1980-87	USA	5611648+	REC25-823683	REC335523					

JUNTA DE CULATA
GASKET CYLINDER HEAD
GUARNIZIONE TESTATA

4 TIEMPOS STROKES
JUNTA DE CULATA
GASKET CYLINDER HEAD
GUARNIZIONE TESTATA

Ref.	R.O. / OEM
REC27-803508	27-803508

MOTORES / ENGINES / MOTORI
4, 5, 6 HP (1 cyl)

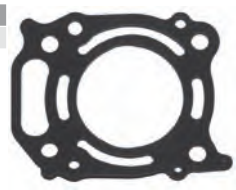

Ref.	R.O. / OEM
REC6G8-11181-A1	27-8254821

MOTORES / ENGINES / MOTORI
8 HP (232cc)
9.9HP
(2 cyl)



Ref.	R.O. / OEM
PAF15-07000100	27-850836

MOTORES / ENGINES / MOTORI
8 HP (232cc)
9.9HP (323cc)
13.5, 15HP (2 cyl)



Ref.	R.O. / OEM
PAF8-05000100	27-850836001

MOTORES / ENGINES / MOTORI
8, 9.9 HP (209cc)

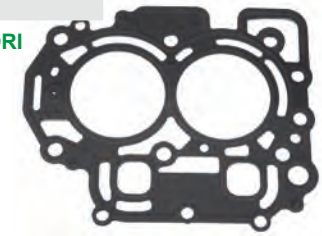

Ref.	R.O. / OEM
PAF25-05040000	8M0049885, 27-830270

MOTORES / ENGINES / MOTORI
25 HP



Ref.	R.O. / OEM
REC67C-11181-01	27-834777

MOTORES / ENGINES / MOTORI
30, 30EFI, 40, 40EFI HP (3cyl)

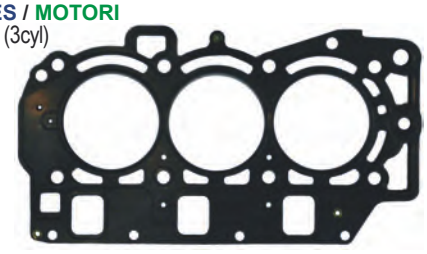

Ref.	R.O. / OEM
REC8M0045278	27-8M0045278, 27-857081

MOTORES / ENGINES / MOTORI
40, 40EFI, 50, 50EFI, 60, 60EFI HP (L4-cyl)



Ref.	R.O. / OEM
REC27-825032	27-825032

MOTORES / ENGINES / MOTORI
40, 45, 50 HP



Ref.	R.O. / OEM
REC67F-11181-03	27-8041151

MOTORES / ENGINES / MOTORI
70, 90, 115EFI HP (L4-cyl)

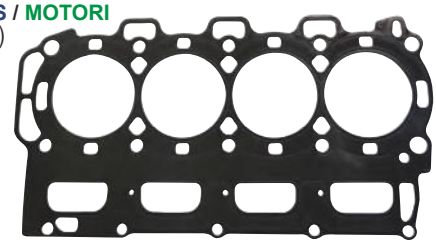

Ref.	R.O. / OEM
RM27-8M0024565	27-8M0024565

MOTORES / ENGINES / MOTORI
Verado (4 cyl)
75 / 80 / 90 /100 / 115 EFI

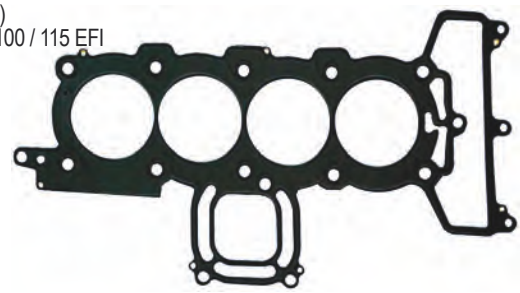

Ref.	R.O./ OEM
RM27-8M0033476	27-895374006, 8M0024564

MOTORES / ENGINES / MOTORI
Verado 6 Cyl

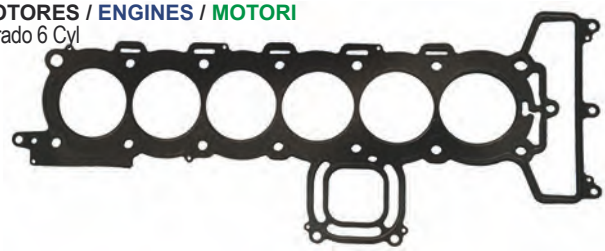

Ref.	R.O. / OEM
REC69J-11181-03	27-887848

MOTORES / ENGINES / MOTORI
225 HP EFI Estribor / Stribord / Tribordo



Ref.	R.O. / OEM
REC69J-11182-03	27-887848-1

MOTORES / ENGINES / MOTORI
225 HP EFI (3.2L) Babor / Port / Babordo



2 TIEMPOS / STROKES — JUNTA DE CULATA / GASKET CYLINDER HEAD / GUARNIZIONE TESTATA

Ref.	R.O.
REC309-01005-2	27-95299001

MOTORES / ENGINES / MOTORI
2.5 HP
3.3 & 3 HP
2 & 2.2M



Ref.	R.O.
REC3B2-01005-0	27-803663021

MOTORES / ENGINES / MOTORI
6, 8, 9.8 HP (2 Cyl International)



Ref.	R.O. / OEM
REC677-11181-A0	27-95595M

MOTORES / ENGINES / MOTORI
8K / W8



Ref.	R.O.
REC351-01005-0	27-803663018

MOTORES / ENGINES / MOTORI
9.9 HP (2 Cyl International)



Ref.	R.O. / OEM
REC6E7-11181-00	27-18937M

MOTORES / ENGINES / MOTORI
15C-K, W15, 9.9C



Ref.	R.O.
REC350-01005-0	27-803663

MOTORES / ENGINES / MOTORI
15, 18 HP (2 Cyl International)



Ref.	R.O.
REC346-01005-0	27-8129391

MOTORES / ENGINES / MOTORI
25, 30 HP (2 Cyl International)



Ref.	R.O. / OEM
REC689-11181-00	27-19138M

MOTORES / ENGINES / MOTORI
30A / W30



Ref.	R.O.
REC3C8-01005-4	27-8M0062091
	27-81293910

MOTORES / ENGINES / MOTORI
40 (International)
40 (MXL SEAPRO)



Ref.	R.O. OEM	Dimensiones Dimensions Dimensione	Ø	Ø Piston Piston Ø Ø Pistone
REC27-96542-1	27-96542-1	14-3/4" x 4-5/8"	3-1/4"	3.125"
	27-96281T01			

MOTORES / ENGINES / MOTORI
V6 2.0L (1976-90) Loopcharged
Utilizar con biela nº. 636-8118.
Use with rod no. 636-8118.
Utilizzare con biela nº. 636-8118.

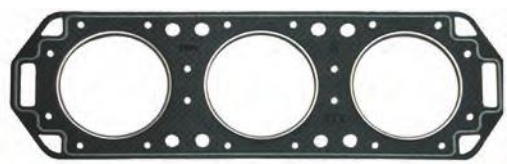

Ref.	R.O. OEM	Dimensiones Dimensions Dimensione	Ø	Ø Piston Piston Ø Ø Pistone
REC27-18785T	27-18785T	14-3/4" x 4-7/8"	3-1/4"	3.125"

MOTORES / ENGINES / MOTORI
V6 2.0L (1992-00) Loopcharged
Utilizar con biela nº. 644-818141.
Use with rod no. 644-818141.
Utilizzare con biela nº. 644-818141.



Ref.	R.O. OEM	Dimensiones Dimensions Dimensione	Ø	Ø Piston Piston Ø Ø Pistone
REC27-822844T04	27-822844T04	14-3/4" x 4-15/16"	3-1/2"	3.501"

MOTORES / ENGINES / MOTORI
V6 2.0L (1978-00) Loopcharged



Ref.	R.O. OEM	Dimensiones Dimensions Dimensione	Ø	Ø Piston Piston Ø Ø Pistone
REC27-79583-1	27-79583-1	14-5/8" x 4-5/8"	3-3/16"	3.125"

MOTORES / ENGINES / MOTORI
V6 2.0L (1976-98) Loopcharged

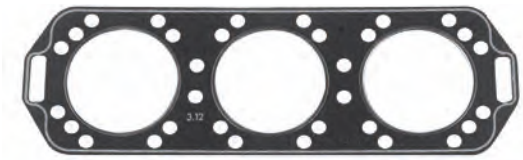

Ref.	R.O. OEM	Dimensiones Dimensions Dimensione	Ø	Ø Piston Piston Ø Ø Pistone
REC27-41246-1	27-41246-1	14-3/4" x 4-11/16"	3-1/2"	3.375"

MOTORES / ENGINES / MOTORI
V6 2.4L (1978-98) Loopcharged



Ref.	R.O. OEM	Dimensiones Dimensions Dimensione	Ø	Ø Piston Piston Ø Ø Pistone
REC27-418786T	27-18786T	14-3/4" x 4-7/8"	3-1/2"	3.375"

MOTORES / ENGINES / MOTORI
V6 2.4L (1978-98) Loopcharged
Pistón para / piston for / pistone per: XR4,
Magnum II, 175

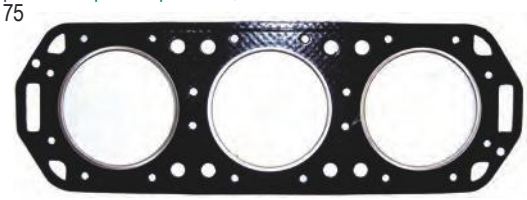

Ref.	R.O. OEM	Dimensiones Dimensions Dimensione	Ø	Ø Piston Piston Ø Ø Pistone
REC27-41245-1	27-41245-1	14-3/4" x 4-3/4"	3-1/2"	3.375"

MOTORES / ENGINES / MOTORI
V6 2.4L (1978-88) Loopcharged
Pistón para / piston for / pistone per: 200, 2000.



KIT JUNTAS
GASKET KITS
KIT GUARNIZIONI

4 TIEMPOS STROKES

Ref.	R.O. / OEM
REC6G8-W0001-A3	27-825847A95

MOTORES / ENGINES / MOTORI
8 Bodensee (Inter.)
9.9 HP (232 cc)

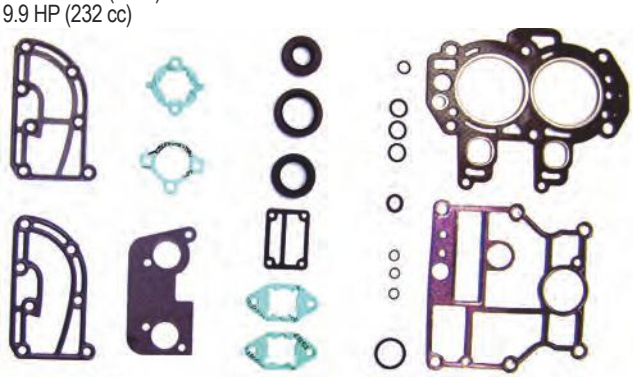

Ref.	R.O. / OEM
REC3V1-87121-0	27-835427A04

MOTORES / ENGINES / MOTORI
8, 9.9 HP (209 cc)

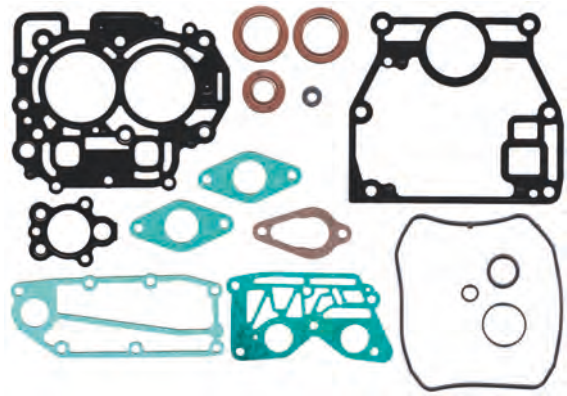

Ref.	R.O. / OEM
REC65W-W0001-00	27-830270A98

MOTORES / ENGINES / MOTORI
25 HP

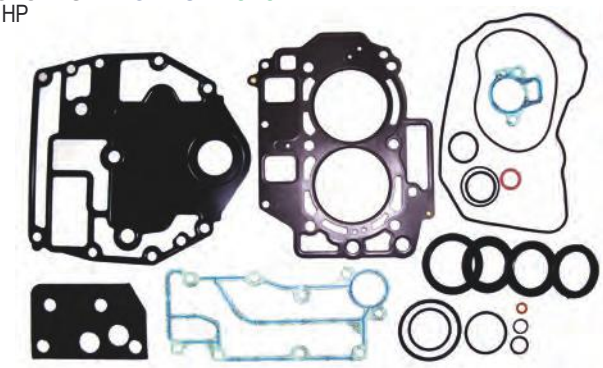

Ref.	R.O. OEM
REC67C-W0001-01	825231A02

MOTORES / ENGINES / MOTORI
OP153500-OP400999
30, 40HP (3 Cyl)

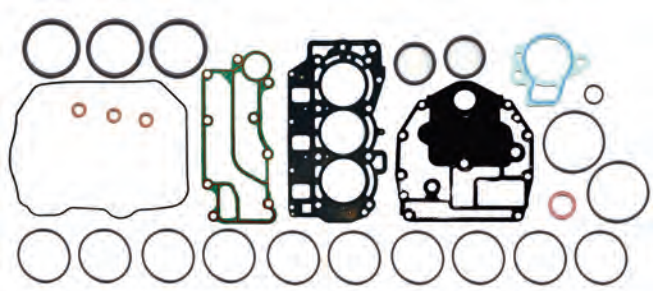

Ref.	R.O. OEM
REC6P2-W0001-01	27-887810A04

MOTORES / ENGINES / MOTORI
OT807876 - 1B055687
225 EFI (4 T/ 4 Stroke / 4 tempi)

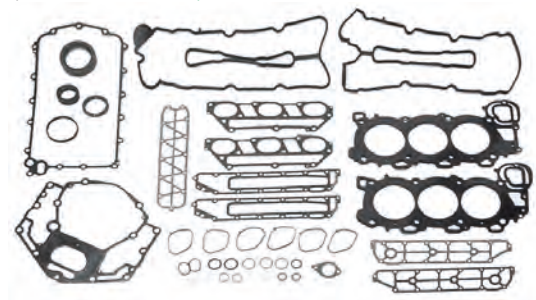

Ref.	R.O./ OEM
RM27-896142A07	27-896142A06, A07

MOTORES / ENGINES / MOTORI
Verado (4 Cyl)

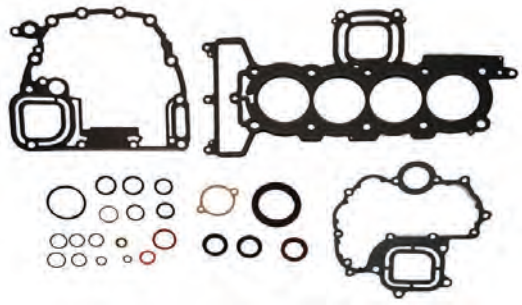

Ref.	R.O./ OEM
RM27-880552A07	27-880552A07, A06

MOTORES / ENGINES / MOTORI
Verado (6 Cyl)

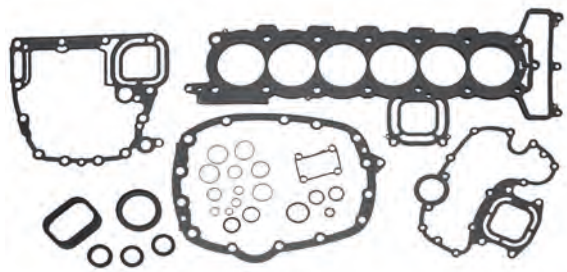

2 TIEMPOS STROKES
KIT JUNTAS
GASKET KITS
KIT GUARNIZIONI

Ref.	R.O. / OEM
REC27-42364A92	27-42364A92

MOTORES / ENGINES / MOTORI
6 / 8 / 9.9 HP
XR10
10 VIKING / SEAPRO
15, 15 SEAPRO / VIKING
10 MAGNUM

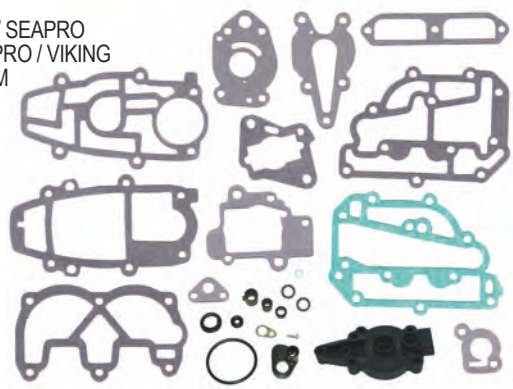

Ref.	R.O. / OEM
REC27-41499A87	27-41499A87

MOTORES / ENGINES / MOTORI
15 SEAPRO (XD)
18 XD / 20 XD (2 cyl)
20 JET / 20 (2 cyl)
25, 25 SEAPRO, 25 XD
SUPER 15 (2 cyl)
15 Marathon XD

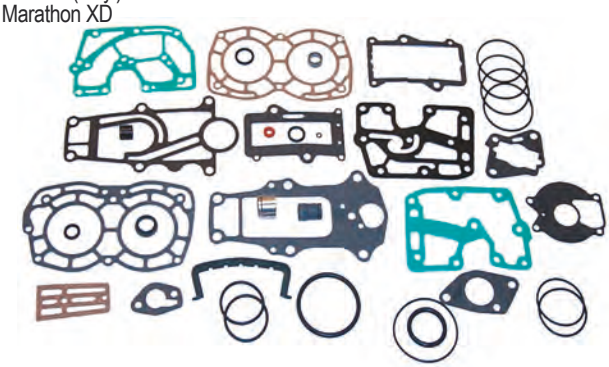

Ref.	R.O. / OEM
REC27-85491A90	27-85491A90

MOTORES / ENGINES / MOTORI
30 JET
40 (4 cyl)

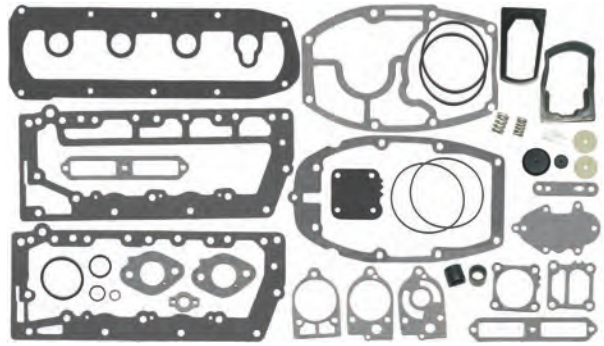

Ref.	R.O. / OEM
REC27-822420A94	27-822420A94

MOTORES / ENGINES / MOTORI
30 / 40 (2 Cyl)
30 (9854537+)
40 (985437+)

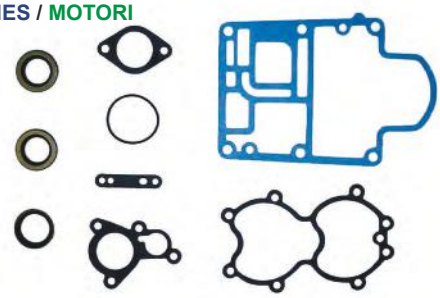

Ref.	R.O. / OEM
REC27-828553A97	27-828553A97

MOTORES / ENGINES / MOTORI
30 JET (3 cyl)
40 / 50 (3 cyl)

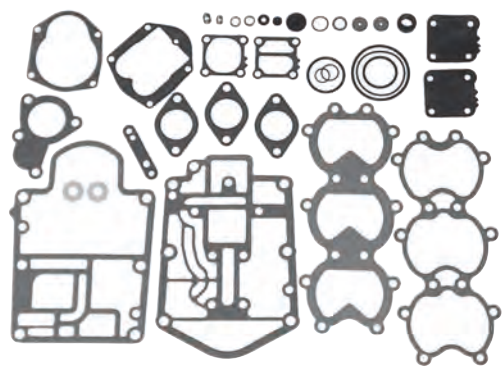

Ref.	R.O. / OEM
REC27-78028A78	27-78028A78

MOTORES / ENGINES / MOTORI
35 HP (2 Cyl)
402, 40 HP (2 cyl)

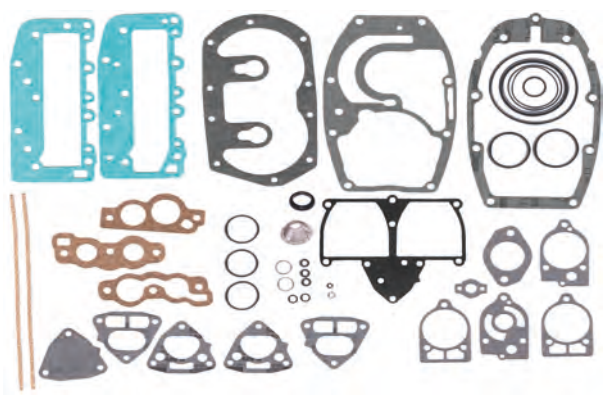

Ref.	R.O. / OEM
REC27-812867A97	27-812867A97

MOTORES / ENGINES / MOTORI
40/45 JET
50/55 (3 cyl)
60 (3 cyl) Bigfoot

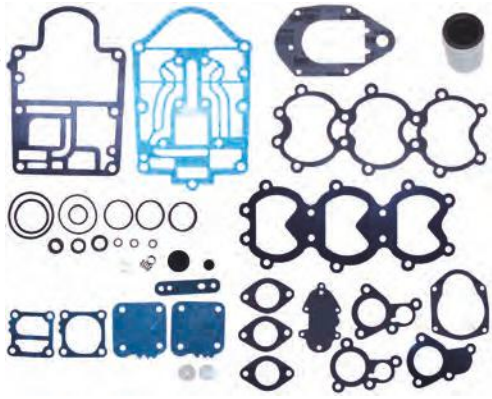

Ref.	R.O. / OEM
REC27-72486A32	27-72486A32

MOTORES / ENGINES / MOTORI
45 / 50 HP (4 Cyl)

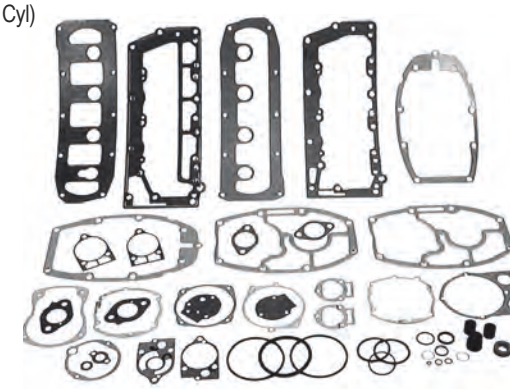

Ref.	R.O. / OEM
REC27-88449A32	27-88449A32

MOTORES / ENGINES / MOTORI
50, 60, 70 (3 cyl)

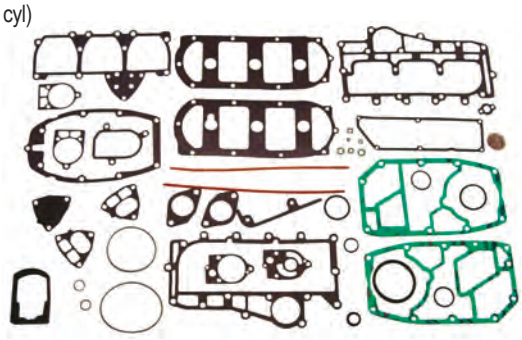

Ref.	R.O. / OEM
REC27-43779A87	27-43779A87

MOTORES / ENGINES / MOTORI
50 / 60 (3 cyl)

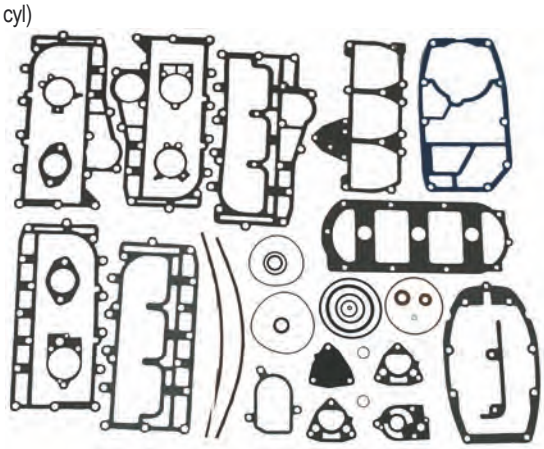

Ref.	R.O. / OEM
REC27-43004A99	27-43004A99

MOTORES / ENGINES / MOTORI
65 JET
65 JET (3 cyl)
75 / 90 (3 cyl)

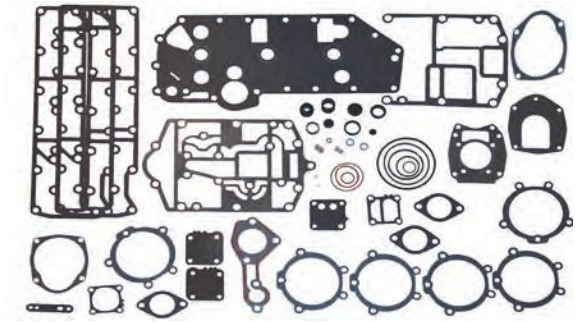

Ref.	R.O. / OEM
REC27-13461A99	27-13461A99

MOTORES / ENGINES / MOTORI
65 / 80 HP JET
75 / 90 HP (3 cyl)
100 / 115 / 125 HP (4 cyl)

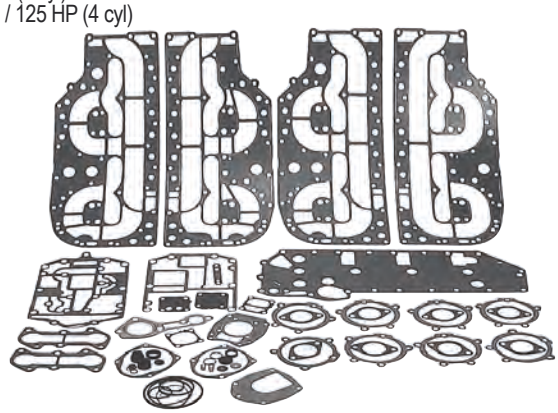

Ref.	R.O. / OEM
REC27-73645A87	27-73645A87

MOTORES / ENGINES / MOTORI
75 (4 cyl)

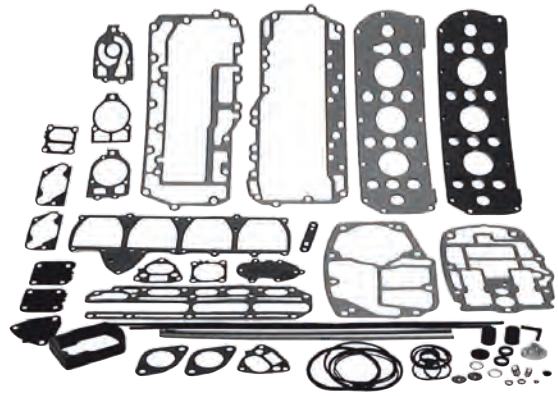

Ref.	R.O. / OEM
REC27-85653A87	27-85653A87

MOTORES / ENGINES / MOTORI
90 & 115 (6 Cyl. en línea / In line / In linea)

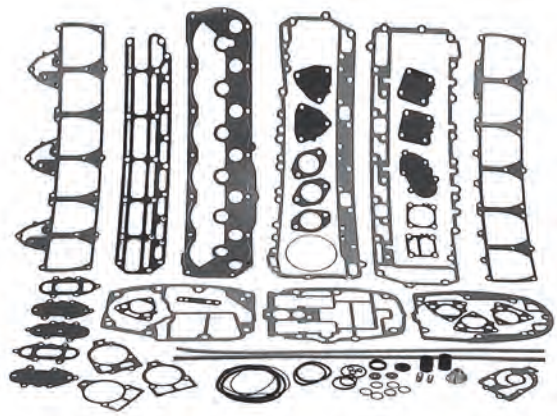

Ref.	R.O. / OEM
REC27-815791A92	27-815791A92

MOTORES / ENGINES / MOTORI
105 / 140 JET
V-135
V-150 (XR/EFI)
V-175 (XR/EFI)
V-200 (XR/EFI)
XR-6

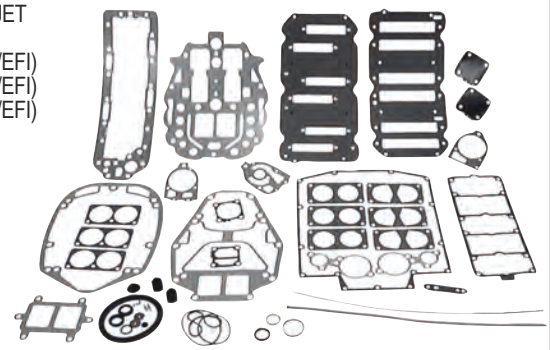

Ref.	R.O. / OEM
REC27-814754A00	27-814754A00

MOTORES / ENGINES / MOTORI
110 JET
150 / 175 PROXS
V-135 (DFI)
V-150 (DFI)
V-175 (DFI)
2.5L

No incluye JUNTA CULATA.
HEAD GASKET not included.
Non include GUARNIZIONE TESTATA.

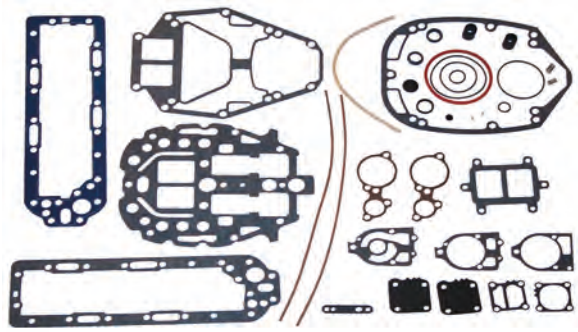

Ref.	R.O. / OEM
REC27-90484A88	27-90484A88

MOTORES / ENGINES / MOTORI
V-135
V-150 (Mag / Marathon Work / XR-2)
V-1500

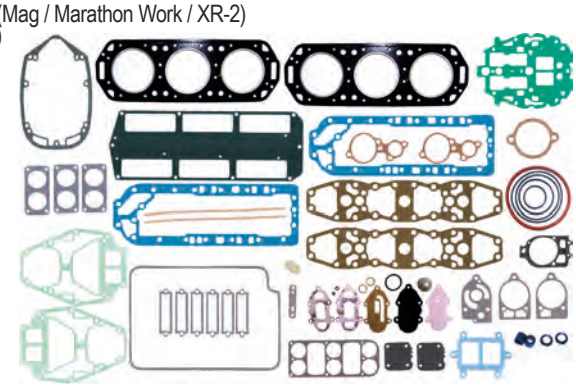

Ref.	R.O. / OEM
REC27-14697A87	27-14697A87

MOTORES / ENGINES / MOTORI
V-175 (SKI)
V-200 (EFI)
V-220

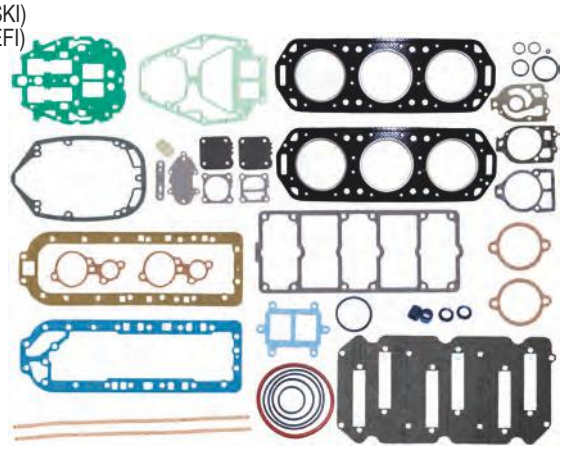

Ref.	R.O. / OEM
REC27-11338A88	27-11338A88

MOTORES / ENGINES / MOTORI
V-175
XR-4
Magnum II

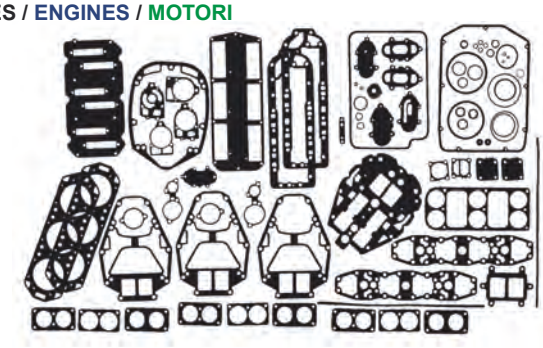

Ref.	R.O. / OEM
REC27-832934A00	27-832934A00

MOTORES / ENGINES / MOTORI
200 (DFI 7 EFI)
200 PRO XS
225 (EFI/DFI)
225 SEAPRO
250 (DFI/EFI)
3.0L modelos / models / modelli

No incluye ARO de junta de culata.
Cylinder head O-RING not included.
Non include O-RING guarnizione testata.



Ref.	R.O. / OEM
REC27-89221A88	27-89221A88

MOTORES / ENGINES / MOTORI
V-200

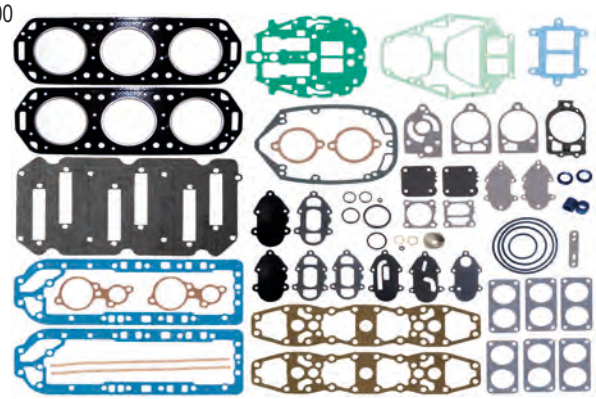

Ref.	R.O. / OEM
REC27-79583A81	27-79583A81

MOTORES / ENGINES / MOTORI
V-1500 / V-150 (Mag / Marathon Work / XR-2)
V-175

No incluye JUNTA CULATA.
HEAD GASKET not included.
Non include GUARNIZIONE TESTATA.

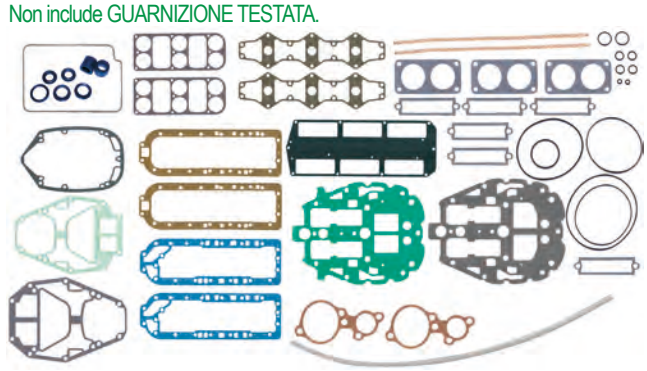

GUÍA JUNTAS CULATA
GASKET CYLINDER GUIDE
GUIDA GUARNIZIONE TESTATA

4 TIEMPOS STROKES

HP	Nº SERIE SERIAL NUM. Nº DI SERIE	CYL.	JUNTA CULATA HEAD GASKET GUARN. TESTA	KIT JUNTAS SUPERIOR MOTOR GASKET KIT POWER HEAD KIT GUARNIZIONE SUPERIORE MOTORE	JUNTA BASE BASE GASKET GUARN. BASE
4HP	0P037456 +	1	REC27-803508		
5HP	0P037456 +	1	REC27-803508		
6HP	0P037456 +	1	REC27-803508		
8HP (209cc)	0P325500 +	2	PAF8-05000100	REC3V1-87121-0	PAF8-00000004
8HP (Bodensee) USA(232 cc)	0H000058 +	2	REC6G8-11181-A1	REC6G8-W0001-A3	REC6G8-11351-A0
8HP (Bodensee)	0P086824 - 0P400999	2	PAF15-07000100	REC66M-W0001-01	PAF15-00000014
8HP (Bodensee) USA(232 cc)	0H000058 +	2	REC6G8-11181-A1	REC6G8-W0001-A3	REC6G8-11351-A0
9.9HP (209cc)	0P325500 +	2	PAF8-05000100	REC3V1-87121-0	PAF8-00000004
9.9HP (323cc)	0P075166 - 0P400999	2	PAF15-07000100	REC66M-W0001-01	PAF15-00000014
13.5HP (International)	0P134638 +	2	PAF15-07000100	REC66M-W0001-01	PAF15-00000014
15HP	0P9973100 +	2	PAF15-07000100	REC66M-W0001-01	PAF15-00000014
25HP	0P9973100 +	2	PAF25-05040000	REC65W-W0001-00	PAF25-00000013
30HP	0P017000 +	3	REC67C-11181-01	REC67C-W0001-01	REC67C-11351-00
30HP (Carb) & (EFI)	0P153500 - 0P400999	3	REC67C-11181-01	REC67C-W0001-01	REC67C-11351-00
40HP	0P0170000 - 0P153499	3	REC67C-11181-01	REC67C-W0001-01	REC67C-11351-00
40HP (Carb)	0P153500 +	3	REC67C-11181-01	REC67C-W0001-01	REC67C-11351-00
40HP (EFI)	0P401000 +	3	REC67C-11181-01	REC67C-W0001-01	REC67C-11351-00
40HP (EFI)	0P153500 +	4	REC8M0045278		REC67C-11351-00
40HP	9944807 - 0P016999	4	REC27-825032		REC67C-11351-00
40HP	OP094500 - 0P206999	4	REC8M0045278		REC67C-11351-00
40HP (Italy)	0P017000 - 0P094499	4	REC27-825032		REC67C-11351-00
45HP (Bodensee)	0P017000 +	4	REC27-825032		REC67C-11351-00
50HP (Bigfoot)	0P9944807 +	4	REC27-825032		REC67C-11351-00
50HP (EFI)	0P153500 +	4	REC8M0045278		REC67C-11351-00
50HP	OP094500 - 0P206999	4	REC8M0045278		REC67C-11351-00
60HP (EFI)	0P153500 +	4	REC8M0045278		REC67C-11351-00
60HP	OP094500 - 0P206999	4	REC8M0045278		REC67C-11351-00
75HP (Bodensee)	0G960500 +	4	REC67F-11181-03	RM858732T02	REC68V-11351-00
75HP (EFI)	1B172291 - 1B366822	4	REC67F-11181-03	RM858732T02	REC68V-11351-00
80HP (EFI)	1B227000 - 1B366822	4	REC67F-11181-03	RM858732T02	REC68V-11351-00
90HP (4 Stroke)	0G960500 +	4	REC67F-11181-03	RM858732T02	REC68V-11351-00
90HP (EFI)	1B172291 - 1B366822	4	REC67F-11181-03	RM858732T02	REC68V-11351-00
100HP (EFI)	1B227000 - 1B366822	4	REC67F-11181-03	RM858732T02	REC68V-11351-00
115HP (EFI)	0T178500 - 1B366822	4	REC67F-11181-03	RM858732T02	REC68V-11351-00
75/80/90/100 & 115 (EFI)	1B494360 +	4	RM27-8M0024565		
135 (VERADO)	OP419487 +	4	RM27-8M0024565	RM27-896142A07	
150 (VERADO)	OP419487 +	4	RM27-8M0024565	RM27-896142A07	
175 (VERADO)	OP419487 +	4	RM27-8M0024565	RM27-896142A07	
200 (VERADO)	OP514869 +	4	RM27-8M0024565	RM27-896142A07	
200HP (VERADO)	0P520553 +	6	RM27-8M0033476	RM27-880552A07	
225HP (VERADO)	0P409357 +	6	RM27-8M0033476	RM27-880552A07	
225HP (EFI)	0T653945 +	V6	REC69J-11181-03 REC69J-11182-03	REC6P2-W0001-01	REC69J-11351-11
250HP (VERADO)	0P409357 +	6	RM27-8M0033476	RM27-880552A07	
275HP (VERADO)	0P464488 +	6	RM27-8M0033476	RM27-880552A07	
300HP (VERADO)	0P520553 +	6	RM27-8M0033476	RM27-880552A07	
350HP (VERADO)	2B141617 +	6	RM27-8M0033476	RM27-880552A07	
400HP (VERADO)	2B141124 +	6	RM27-8M0033476	RM27-880552A07	

GUÍA JUNTAS CULATA
GASKET CYLINDER GUIDE
GUIDA GUARNIZIONE TESTATA

2 TIEMPOS STROKES

HP	AÑO YEAR ANNO	PAÍS COUNT. PAESE	Nº SERIE SERIAL NUM. Nº DI SERIE	KIT JUNTAS GASKET SET KIT GUARN.	JUNTA CULATA HEAD GASKET GUARN. TESTA
6	1986-93	USA	0A197112-0T800749	REC27-42364A92	
6	1986-93	BEL	9461526+	REC27-42364A92	
8	1986-93	USA	0A197112+	REC27-42364A92	
8	1986-93	BEL	9461526+	REC27-42364A92	
9.9	1986-93	USA	0A197112+	REC27-42364A92	
9.9	1986-93	BEL	9461526+	REC27-42364A92	
10 Marathon XR10, Sea Pro	1990-93	USA	0D038000+	REC27-42364A92	
10 Marathon XR10, Sea Pro	1990-93	BEL	9596000+	REC27-42364A92	
10 Magnum / Marathon	1990-98	USA	0D038000+	REC27-42364A92	
10 Magnum / Marathon	1990-98	BEL	9596000+	REC27-42364A92	
15	1988-93	USA	0B292414+	REC27-42364A92	
15	1988-93	BEL	9542620+	REC27-42364A92	
15 XD Sea Pro / Marathon	1997-98	BEL	9927000+	REC27-41499A87	
15 (Super)	1994-98	USA	0B238464+	REC27-41499A87	
15 (Super)	1994-98	BEL	9507381+	REC27-41499A87	

HP	AÑO YEAR ANNO	PAÍS COUNT. PAESE	Nº SERIE SERIAL NUM. Nº DI SERIE	KIT JUNTAS GASKET SET KIT GUARN.	JUNTA CULATA HEAD GASKET GUARN. TESTA
15 (Super)	1994-98	CAN	0A730007+	**REC27-41499A87**	
18 (18 XD)	1983 1/2	USA	6416713-6443972	**REC27-41499A87**	
18 (18 XD)	1983 1/3	BEL	9378116-7209532	**REC27-41499A87**	
18 (18 XD)	1984-85	CAN	7207858-7209532	**REC27-41499A87**	
20 (20, 20XD, 200)	1986-87	USA	6443973+	**REC27-41499A87**	
20 (20, 20XD, 200)	1986-87	BEL	9415101+	**REC27-41499A87**	
20 (20, 20XD, 200)	1986-87	CAN	7209533+	**REC27-41499A87**	
20 Jet	1994-98	USA	0G044027+	**REC27-41499A87**	
20 Jet	1994-98	BEL	9807909+	**REC27-41499A87**	
25 (25, 25XD)	1984-87	USA	6416713-0T979999	**REC27-41499A87**	
25 (25, 25XD)	1983 1/2	BEL	9378116-0P325499	**REC27-41499A87**	
25 (25, 25XD)	1983 1/2	CAN	7207858+	**REC27-41499A87**	
30 Jet (40HP) (4-Cyl.)	1994-97	USA	0C159200+	**REC27-85491A90**	
30 Jet (40HP) (4-Cyl.)	1998	BEL	9570790+	**REC27-85491A90**	
35 (2-Cyl.)	1984-86	USA	6445653-0B110788	**REC27-78028A78**	
35 (2-Cyl.)	1984-86	BEL	9384476-9466646	**REC27-78028A78**	
35 (2-Cyl.)	1984-86	CAN	7209608+	**REC27-78028A78**	
40 (40, 402) (2-Cyl.)	1972-74	USA	3336258-0G053313	**REC27-78028A78**	
40 (40, 402) (2-Cyl.)	1972-74	AUS	8002335+	**REC27-78028A78**	
40 (40, 402) (2-Cyl.)	1972-74	BEL	3339688+	**REC27-78028A78**	
40 (2-Cyl.)	1972-74	CAN	3340783+	**REC27-78028A78**	
40 (4-Cyl.)	1989+	USA	0C159200+	**REC27-85491A90**	
40 (4-Cyl.)	1989+	BEL	9570790+	**REC27-85491A90**	
45 (4-Cyl.)	1986	USA	5531630-0B110788	**REC27-72486A32**	
45 (4-Cyl.)	1986	AUS	8063985+	**REC27-72486A32**	
45 (4-Cyl.)	1986	BEL	9248006-9466691	**REC27-72486A32**	
45 (4-Cyl.)	1986	CAN	7143688-0A719280	**REC27-72486A32**	
45 (4-Cyl.)	1987-89	USA	0B110789+	**REC27-85491A90**	
45 (4-Cyl.)	1987-89	BEL	9466692+	**REC27-85491A90**	
45 (4-Cyl.)	1987-89	CAN	0A719281+	**REC27-85491A90**	
50 (500) (4-Cyl.)	1965-67	USA	2116318+	**REC27-72486A32**	
50 (500) (4-Cyl.)	1965-67	CAN	2097445+	**REC27-72486A32**	
50 (500) (4-Cyl.)	1965-67	AUS	2863739+	**REC27-72486A32**	
50 (500) (4-Cyl.)	1965-67	BEL	9001581+	**REC27-72486A32**	
50 (3-Cyl.)	1986-87	USA	6428681-0B122929	**REC27-88449A32**	
50 (3-Cyl.)	1986-87	BEL	9385911-9469199	**REC27-88449A32**	
50 (3-Cyl.)	1986-87	CAN	7208333-0A721307	**REC27-88449A32**	
50 (3-Cyl.)	1986-87	USA	0B122930-0D000749	**REC27-43779A87**	
50 (3-Cyl.)	1986-87	BEL	9469200-9683054	**REC27-43779A87**	
50 (3-Cyl.)	1986-87	CAN	0A721308+	**REC27-43779A87**	
55 (3-Cyl.)	1984-87	USA	6428681-0B122929	**REC27-88449A32**	
55 (3-Cyl.)	1984-87	BEL	9385911-9469199	**REC27-88449A32**	
55 (3-Cyl.)	1984-87	CAN	7208333-0A721307	**REC27-88449A32**	
55 (3-Cyl.)	1988-90	USA	0B122930-0D000749	**REC27-43779A87**	
55 (3-Cyl.)	1988-90	BEL	9469200-9683054	**REC27-43779A87**	
55 (3-Cyl.)	1988-90	CAN	0A721308+	**REC27-43779A87**	
60 (3-Cyl.)	1984-87	USA	6428681-0B122929	**REC27-88449A32**	
60 (3-Cyl.)	1984-87	BEL	9385911-9469199	**REC27-88449A32**	
60 (3-Cyl.)	1984-87	CAN	7208333-0A721307	**REC27-88449A32**	
60 (3-Cyl.)	1988-90	USA	0B122930-0D000749	**REC27-43779A87**	
60 (3-Cyl.)	1988-90	BEL	9469200-9683054	**REC27-43779A87**	
60 (3-Cyl.)	1988-90	CAN	0A721308+	**REC27-43779A87**	
65 (650) (3-Cyl.)	1976	USA	4382057-4571651	**REC27-88449A32**	
65 (650) (3-Cyl.)	1976	BEL	9112989-9135824	**REC27-88449A32**	
65 (650) (3-Cyl.)	1976	CAN	7073473-7087822	**REC27-88449A32**	
70 (3-Cyl.)	1977-79	USA	4571652-0A996141	**REC27-88449A32**	
70 (3-Cyl.)	1977-79	AUS	8042350+	**REC27-88449A32**	
70 (3-Cyl.)	1977-79	BEL	9135825-9385910	**REC27-88449A32**	
70 (3-Cyl.)	1977-79	CAN	7087823-7208332	**REC27-88449A32**	
70 (3-Cyl.)	1987	USA	0A996142+	**REC27-43004A99**	
70 (3-Cyl.)	1987	BEL	9483121+	**REC27-43004A99**	
75 (4-Cyl.)	1984-88	USA	6432901+	**REC27-73645A87**	
75 (4-Cyl.)	1984-88	BEL	9393856+	**REC27-73645A87**	
75 (4-Cyl.)	1984-88	CAN	7208573+	**REC27-73645A87**	
80 (80, 800) (4-Cyl.)	1978-79	USA	4831999-6432900	**REC27-73645A87**	
80 (80, 800) (4-Cyl.)	1978-79	AUS	8050200+	**REC27-73645A87**	
80 (80, 800) (4-Cyl.)	1978-79	BEL	9177626-9393855	**REC27-73645A87**	

HP	AÑO YEAR ANNO	PAÍS COUNT. PAESE	Nº SERIE SERIAL NUM. Nº DI SERIE	KIT JUNTAS GASKET SET KIT GUARN.	JUNTA CULATA HEAD GASKET GUARN. TESTA
80 (80, 800) (4-Cyl.)	1978-79	CAN	7110998-7208572	**REC27-73645A87**	
80 (3-Cyl.)	1987	USA	0A996142+	**REC27-43004A99**	
80 (3-Cyl.)	1987	BEL	9483121+	**REC27-43004A99**	
80 Jet (4-Cyl.)	1994-98	USA	0D283222+	**REC27-13461A99**	
80 Jet (4-Cyl.)	1994-98	BEL	9793577+	**REC27-13461A99**	
90 (90, 900) (6-Cyl.)	1978-79	USA	4845301+	**REC27-85653A87**	
90 (90, 900) (6-Cyl.)	1978-79	CAN	7111698+	**REC27-85653A87**	
90 (90) (6-Cyl.)	1980-83	AUS	8060545+	**REC27-85653A87**	
90 (3-Cyl.)	1987	USA	0A996142+	**REC27-43004A99**	
90 (3-Cyl.)	1987	BEL	9483121+	**REC27-43004A99**	
100 (4-Cyl.)	1988-98	USA	0B209468+	**REC27-13461A99**	
100 (4-Cyl.)	1988-98	BEL	9523034+	**REC27-13461A99**	
105 Jet (V6)	1996+	USA	0D082000+	**REC27-815791A92**	**REC27-18785T**
115 (1150, 115) (6-Cyl.)	1973-79	USA	3525441+	**REC27-85653A87**	
115 (1150, 115) (6-Cyl.)	1973-79	AUS	8008665+	**REC27-85653A87**	
115 (1150, 115)	1978-79	CAN	7112248+	**REC27-85653A87**	
115 (4-Cyl.)	1988-93	USA	0C100000+	**REC27-13461A99**	
115 (4-Cyl.)	1988-93	BEL	9559771+	**REC27-13461A99**	
125 (4-Cyl.)	1994-98	USA	0D283222+	**REC27-13461A99**	
125 (4-Cyl.)	1994-98	BEL	9793577+	**REC27-13461A99**	
140 (140, 1400) (6-Cyl.)	1972	USA	3293234-3502805	**REC27-85653A87**	
140 (140, 1400) (6-Cyl.)	1978-79	USA	4865678+	**REC27-85653A87**	
140 (140, 1400) (6-Cyl.)	1978-79	AUS	8052650+	**REC27-85653A87**	
140 (140, 1400) (6-Cyl.)	1978-79	CAN	7112773+	**REC27-85653A87**	
150 (1500) (6-Cyl.)	1973-78	USA	3502806-5327662	**REC27-85653A87**	
150 (1500) (6-Cyl.)	1973-78	AUS	8005615-8052649	**REC27-85653A87**	
150 (1500) (6-Cyl.)	1973-77	CAN	7010533-7112772	**REC27-85653A87**	
V-135	1986-88	USA	0A904646-0C239552	**REC27-90484A88**	**REC27-96542-1**
V-135	1991	USA	0C239553-0G960499	**REC27-815791A92**	**REC27-18785T**
V-135	1996-98	USA	0G960500-0T178499		**REC27-18785T**
V-135 DFI	1992-95	USA	0C590000-0G960499	**REC27-814754A00**	
V-135 DFI	1998	USA	0G960500+	**REC27-814754A00**	
V-140 Jet	1996-98	USA	0D082000-0G960499	**REC27-815791A92**	**REC27-822844T04**
V-150 (150, 1500)	1973-77	USA	4868998-6042945	**REC27-79583A81**	**REC27-79583-1**
V-150	1982-90	USA	6042946-0C239552	**REC27-90484A88**	**REC27-96542-1**
V-150	1988-91	USA	0C239553-0G960499	**REC27-815791A92**	**REC27-18785T**
V-150	1996-98	USA	0G960500+	**REC27-814754A00**	
V-150 (XR4 / Magnum II)	1988	USA	0B242885-0C239552	**REC27-11338A88**	**REC27-41246-1**
V-150 (XR4)	1991	USA	0C239553-0D081999	**REC27-815791A92**	**REC27-418786T**
V-150 (XR6 / Magnum III)	1992-95	USA	0D082000-0G960499	**REC27-815791A92**	**REC27-822844T04**
V-150 (XR6 / Magnum III)	1996-98	USA	0G960500+	**REC27-814754A00**	
V-150 EFI	1993-98	USA	0D082000-0G960499	**REC27-815791A92**	**REC27-822844T04**
V-150 DFI	1998	USA	0D590000-0G960499	**REC27-814754A00**	
V-150 DFI	1998	USA	0G960500+	**REC27-814754A00**	
V-175 (175, 1750)	1976-81	USA	4301235-6618750	**REC27-79583A81**	**REC27-79583-1**
V-175 (175, 1750)	1976-79	AUS	8058870+	**REC27-79583A81**	**REC27-79583-1**
V-175	1985-88	USA	6618751-0C239552	**REC27-11338A88**	**REC27-41246-1**
V-175	1991	USA	0C239553-0D081999	**REC27-815791A92**	**REC27-418786T**
V-175	1992-95	USA	0D082000-0G960499	**REC27-815791A92**	**REC27-822844T04**
V-175 EFI	1992-95	USA	0D000750-0D081999	**REC27-815791A92**	**REC27-418786T**
V-175 EFI	1992-95	USA	0D082000-0G960499	**REC27-815791A92**	**REC27-822844T04**
V-175 EFI	1992-98	USA	0T178500+	**REC27-814754A00**	
V-200 (200, 2000)	1978-79	USA	4839034-6073191		**REC27-41245-1**
V-200 (200, 2000)	1980-81	AUS	8061595-8065672		**REC27-41245-1**
V-200	1982	USA	6073192-6203990		**REC27-41245-1**
V-200	1983	USA	6203991-0C291519	**REC27-89221A88**	**REC27-41246-1**
V-200	1991	USA	0C291520-0D081999	**REC27-815791A92**	**REC27-822844T04**
V-200	1992-95	USA	0D082000 +	**REC27-815791A92**	**REC27-822844T04**
V-200 EFI	1989-90	USA	0C100861-0C291519	**REC27-14697A87**	**REC27-41246-1**
V-200 EFI	1991	USA	0C291520-0G960499	**REC27-815791A92**	**REC27-822844T04**
V-220	1987-88	USA	0B117316+	**REC27-14697A87**	**REC27-41246-1**
V-225	1980-81	USA	5628028+		**REC27-41245-1**
V-225 EFI (3.0L) (1)	1995-98	USA	0G129222-0T408999		**REC69J-11181-03**
V-225 EFI (3.0L) (1)	1995-98	USA	0T409000-0T598999		**REC69J-11181-03**
V-225 EFI (3.0L) (1)	1995-98	USA	0T599000+		**REC69J-11181-03**

RETENES ACEITE
OIL SEALS
PARAOLIO

REF	R.O. OEM	EJE SHAFT ASSE	CALIBRE BORE
REC26-12224	26-12224	1.1875	1.6875
REC26-12709	26-12709	0.5000	0.6875
REC26-76868	26-14077	2.0000	2.6875
REC26-14240	26-14240	3.7500	4.5000
REC26-16977	26-16977	0.8750	1.2500
REC26-807006	26-18816	1.6750	2.2500
REC908855	26-20070	0.6250	1.0000
REC26-24590	26-24590	0.4062	0.5625
REC26-30913	26-30913	0.5000	0.8750
REC26-32511	26-32511	1.2500	2.0000
REC26-55682	26-32911	1.0000	1.2500
REC26-33467	26-33467	0.6250	1.1250
REC764337	26-41953	1.1875	1.8750
REC26-43036	26-43036	1.0469	1.4688
REC26-43993	26-43943		
REC26-45587	26-45587	0.3906	0.6250
REC26-55682	26-55682	1.0000	1.2500
REC26-56397	26-56397	0.7500	1.1250
REC320961	26-56788	0.8750	1.2500
REC26-62818	26-62818	1.6250	2.2500
REC26-823894	26-68493	2.2500	3.0000
REC26-69188	26-69188	0.8750	1.2500
REC26-69189	26-69189	0.8750	1.3125
REC26-70081	26-70081	1.1875	1.7500
REC26-72785	26-72785	0.8125	1.8750
REC26-76868	26-76868	1.1875	1.6875
REC26-79831	26-79831	0.7500	0.7500
REC26-8164641	26-816464	0.3750	2.2500
REC26-821092	26-821092	1.5000	0.7500
REC26-00173	26-85107		
REC26-70080	26-89236	0.3750	1.5000
REC26-89238	26-89238	0.8750	1.2500
REC26-90562	26-90562	0.7500	1.5000
REC26-94038	26-94038	1.0000	0.8750
REC26-897153	26-90063	0.4375	1.3750
REC26-90562	26-90562		
REC26-965031	26-96503	0.8750	1.1250



RETENES TAPA CULATA
GASKET CYLINDER SEALS
PARAOLIO COPERCHIO TESTATA

Ref.	R.O. / OEM
REC81554	858452-1

MOTORES / ENGINES / MOTORI
V6 2.5L (1998+)

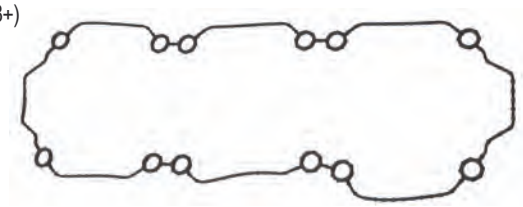

Ref.	R.O. / OEM
REC818574	818574

MOTORES / ENGINES / MOTORI
V6 3.0L (1998+)

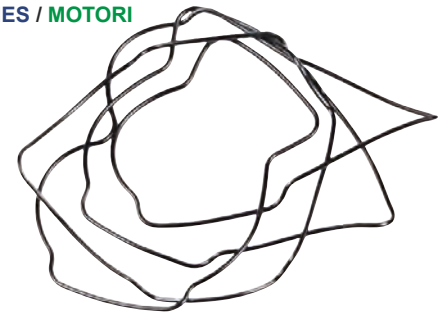

Ref.	R.O. / OEM
PAF8-05000002	27-803508017

MOTORES / ENGINES / MOTORI
(4T / 4 Stroke / 4 Tempi)
8, 9.9HP (209cc)



Ref.	R.O. / OEM
PAF15-07050002	850837

MOTORES / ENGINES / MOTORI
(4T / 4 Stroke / 4 Tempi)
8 Bodensee
9.9 HP
13.5 HP
15 HP

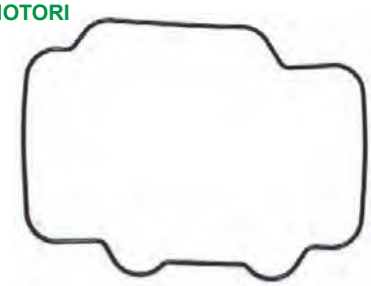

Ref.	R.O. / OEM
PAF25-05000004	25-833103

MOTORES / ENGINES / MOTORI
25HP (4T / 4 Stroke / 4 Tempi)

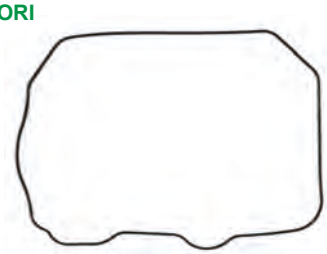

Ref.	R.O. / OEM
REC67C-11356-00	25-854341

MOTORES / ENGINES / MOTORI
30 -40 HP (4T / 4 Stroke / 4 Tempi) CARB & EFI



AROS TÓRICOS CULATA
CYLINDER HEAD O-RINGS
O-RING TESTATA

Ref.	R.O. / OEM	Motores / Engines / Motori
REC25-818573	25-818573	3.0 L Antiguos / Early / Vecchio
REC8597721	859772-1	V6 2.5L

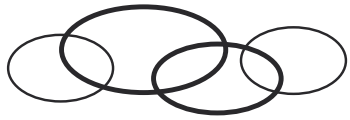

4 TIEMPOS / STROKES
JUNTA BASE MOTOR
GASKET CYLINDER
GUARNIZIONI BASE MOTORI

Ref.	R.O.
PAF8-00000004	27-835427003

MOTORES / ENGINES / MOTORI
8 HP (4T / 4 Stroke / 4 Tempi) (209cc)
9.9 HP (4T / 4 Stroke / 4 Tempi) (209cc)

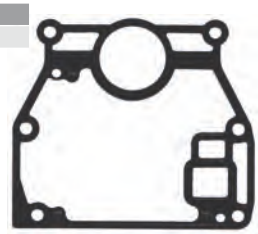

Ref.	R.O.
REC6G8-11351-A0	27-825847

MOTORES / ENGINES / MOTORI
8 (Bodensee) Inter. (4T / 4 Stroke / 4 Tempi)
9.9 (232 cc) (4T / 4 Stroke / 4 Tempi)

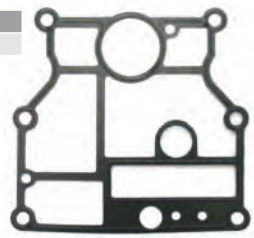

Ref.	R.O.
PAF15-00000014	27-8354272

MOTORES / ENGINES / MOTORI
8 (Bondensee) Inter.
9.9 (323 cc)
13.5 Inter.
15



Ref.	R.O.
PAF25-00000013	27-8M0069692
	8252312

MOTORES / ENGINES / MOTORI
25 HP (4T / 4 Stroke / 4 Tempi)



Ref.	R.O.
REC67C-11351-00	892319001
	27-859352

MOTORES / ENGINES / MOTORI
30 - 60 HP (Carb) EFI (4T / 4 Stroke / 4 Tempi)

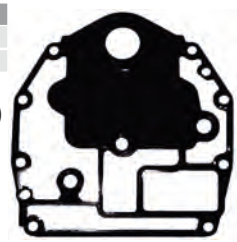

Ref.	R.O.
REC68V-11351-00	27-8587321

MOTORES / ENGINES / MOTORI
75 (Bodensee)
90
115 EFI

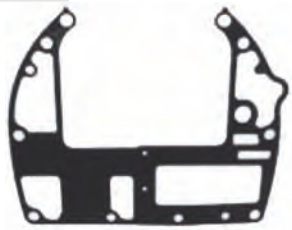

Ref.	R.O.
REC69J-11351-11	27-887810011

MOTORES / ENGINES / MOTORI
225 EFI (4T / 4 Stroke / 4 Tempi) (2003-06)



2 TIEMPOS / STROKES
JUNTA BASE MOTOR
GASKET CYLINDER
GUARNIZIONI BASE MOTORI

Ref.	R.O.
REC6E0-45113-A1	27-91780M

MOTORES / ENGINES / MOTORI
4A/5C (1977-89)



Ref.	R.O.
REC27-89937	27-89937

MOTORES / ENGINES / MOTORI
4.5 / 9.8 HP (1970-86)

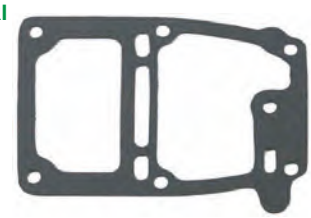

Ref.	R.O.
REC6G1-45113-A1	11560M

MOTORES / ENGINES / MOTORI
6C
8C
(1978-86)

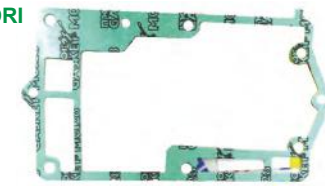

Ref.	R.O.
REC682-11351-A0	27-96602M

MOTORES / ENGINES / MOTORI
9.9C
15C, K, W15
(1979-86)

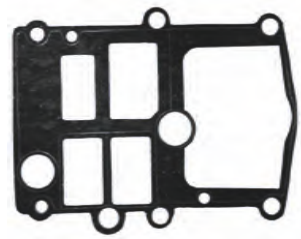

Ref.	R.O.
REC27-41670006	27-41670-3

MOTORES / ENGINES / MOTORI
20 Jet
20 / 25 (2 cyl)
(2005-06)

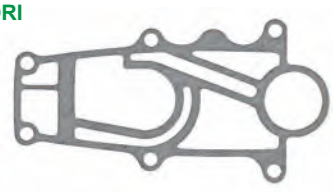

Ref.	R.O.
REC61T-45113-A0	27-84775

MOTORES / ENGINES / MOTORI
20C (Thru prop)
25C (Thru prop)
25K
30a
W30 (w/Marathon)
(1977-98)



Ref.	R.O.
REC27-796501	27-79650-1

MOTORES / ENGINES / MOTORI
30 Jet
40/45 HP (4 cyl)

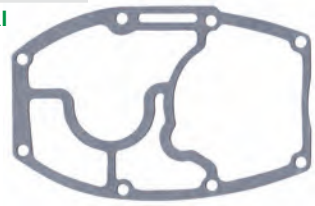

Ref.	R.O.
REC826549	27-826549

MOTORES / ENGINES / MOTORI
75-120 HP (1995-99)

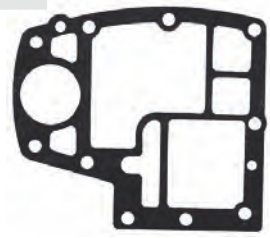

Ref.	R.O.
REC8M0000822	828553

MOTORES / ENGINES / MOTORI
30 / 40 HP (2cyl)
30 / 40 / 45 Jet
40 / 50 / 60 (3 cyl)
(1994-10)

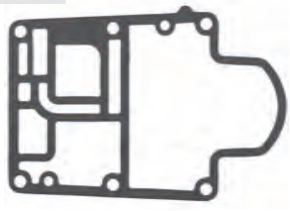

Ref.	R.O.
REC823700	27-823700-2

MOTORES / ENGINES / MOTORI
90-120 HP Jet Drive (1993-00)

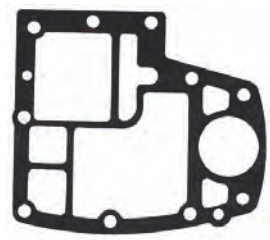

Ref.	R.O.
REC27-628601	27-62860-1

MOTORES / ENGINES / MOTORI
35/40/402 (2 cyl) (1972-89)



Ref.	R.O.
REC27-991764	27-99176-3

MOTORES / ENGINES / MOTORI
110/140 Jet (2.5L)
150/175 Pro X5 (2.5L)
135-200 HP (V-Models)
(1976-10)

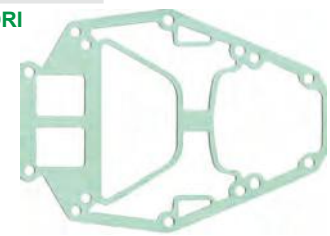

Ref.	R.O.
REC6F5-45113-A0	27-11885

MOTORES / ENGINES / MOTORI
K40 HP
W40 (w/Marathon)
(1989-98)

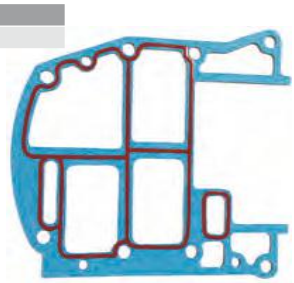

Ref.	R.O.
REC27-991772	27-99177-2

MOTORES / ENGINES / MOTORI
135-200 HP (V-Models)
XR-4
(1976-90)

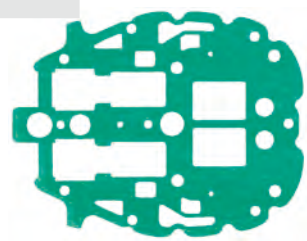

Ref.	R.O.
REC27-884511	27-88451-1

MOTORES / ENGINES / MOTORI
50/60/70 HP (3cyl) (1980-90)

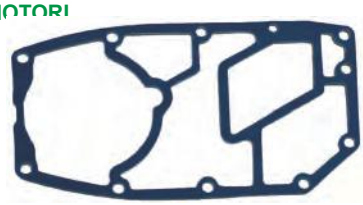

Ref.	R.O.
REC27-997761	27-99776-1

MOTORES / ENGINES / MOTORI
135-175 HP (V-Models)
(1976-93)

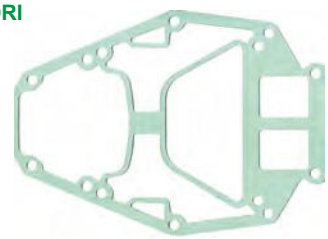

Ref.	R.O.
REC696-45113-00	27-16717M

MOTORES / ENGINES / MOTORI
55/ W55
(1984-89)

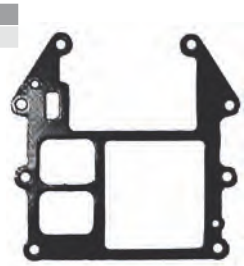

Ref.	R.O.
REC27-8231422	27-78069

MOTORES / ENGINES / MOTORI
150-225 HP (V-Models) (1978-88)

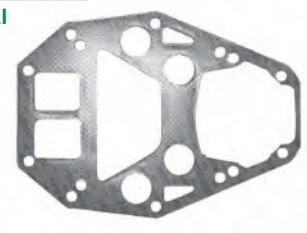

Ref.	R.O.
REC27-430075	27-43007-3

MOTORES / ENGINES / MOTORI
65 / 80 Jet
100 / 115/ 125 (4 cyl)
75 / 90 (3 cyl)
75 / 90 / 115 DFI (3 cyl) (1.5 L)

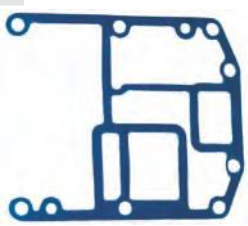

Ref.	R.O.
REC27-75909	27-75909

MOTORES / ENGINES / MOTORI
V-175 (1976-88)
Merc Formula (2 L EFI / CARB)

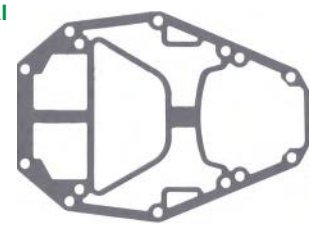

Ref.	R.O.
REC813932	27-813932-2

MOTORES / ENGINES / MOTORI
200-250 HP (3.0L) (DFI, CARB, EFI)
(1994-98)

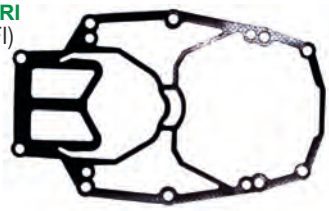

Ref.	R.O.
REC27-39401	27-39401

MOTORES / ENGINES / MOTORI
200 / 20 HP (1970-80)



JUNTAS TAPA REFIRGERACIÓN
GASKETS, EXHAUST INNER COVER
GUARNIZIONE COPERCHIO REFRIGERAZIONE

Ref.	R.O.
REC6E0-41112-A1	27-99995M

MOTORES / ENGINES / MOTORI
4A (1981-89)

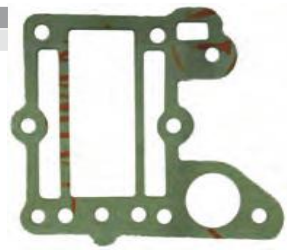

Ref.	R.O.
REC6E0-41114-A1	21-41279M, 99993M

MOTORES / ENGINES / MOTORI
5C
4A
(1977-89)

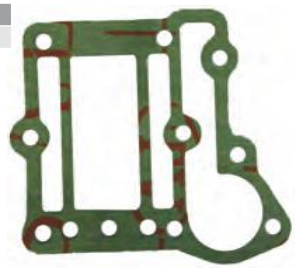

Ref.	R.O.
REC6G1-41112-A1	27-11456M

MOTORES / ENGINES / MOTORI
6C/D
8C
(1978-86)

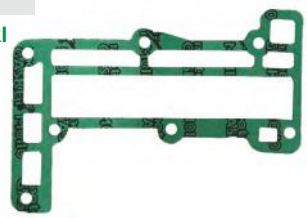

Ref.	R.O.
REC6G1-11193-A1	27-11454M

MOTORES / ENGINES / MOTORI
6C/D
8D
(1978-86)

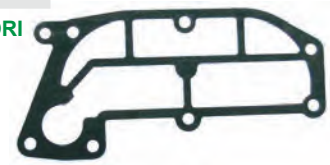

Ref.	R.O.
REC27-62386001	27-62386

MOTORES / ENGINES / MOTORI
6-25 HP (1972-10)



Ref.	R.O.
PAF8-05010004	27-834952001

MOTORES / ENGINES / MOTORI
8, 9.9HP (209cc) (4T / 4 Stroke / 4 Tempi)

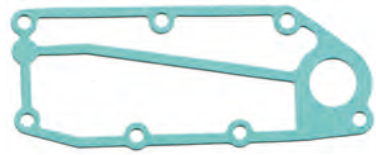

Ref.	R.O.
PAF15-07010018	834952002

MOTORES / ENGINES / MOTORI
(4T / 4 Stroke / 4 Tempi)
8 Bodensee
9.9 HP
13.5 HP
15 HP

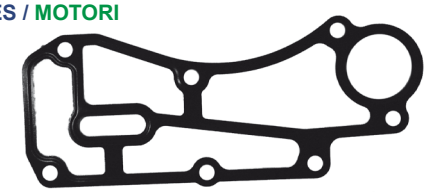

Ref.	R.O.
REC682-41114-00	27-83951M

MOTORES / ENGINES / MOTORI
9.9C
15C, K
W15
(1979-86)

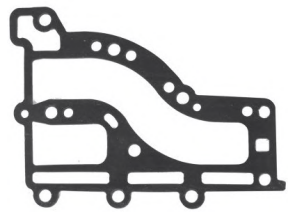

Ref.	R.O.
REC27-25848	27-25848

MOTORES / ENGINES / MOTORI
10-350 HP (1970-86)



Ref.	R.O.
REC664-41114-A0	27-81570M

MOTORES / ENGINES / MOTORI
20C (Thru prop. exhaust)
25C (Thru prop. exhaust)
28
(1977-88)

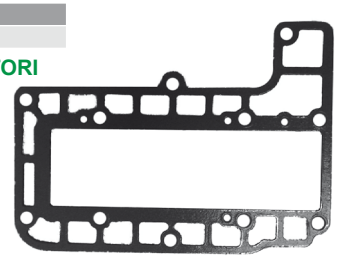

Ref.	R.O.
PAF25-05010111	27-830298

MOTORES / ENGINES / MOTORI
(4T / 4 Stroke / 4 Tempi)
25 HP

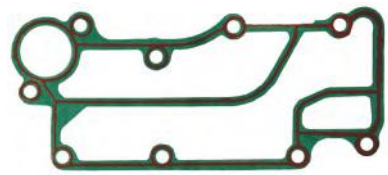

Ref.	R.O.
REC12-38453	12-38453

MOTORES / ENGINES / MOTORI
30-70 HP (1970-97)



Ref.	R.O.
REC27-854913	27-85491-2

MOTORES / ENGINES / MOTORI
30-50 HP (1980-97)

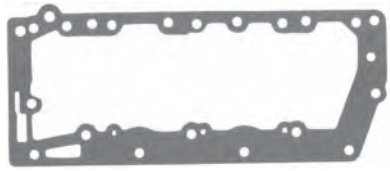

Ref.	R.O.
REC689-41112-A0	27-96656M

MOTORES / ENGINES / MOTORI
30A
W30 (w/Marathon)
(1977-92)

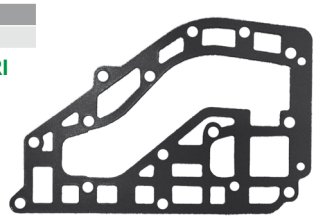

Ref.	R.O.
REC689-41114-A0	27-84741M

MOTORES / ENGINES / MOTORI
30A
W30 (w/Marathon)
(1977-92)

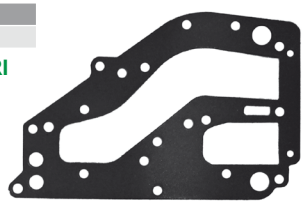

Ref.	R.O.
REC6E9-41114-A0	27-827176M

MOTORES / ENGINES / MOTORI
40 (Twin Carb) (con inyección de aceite / with oil injection / con iniezione dell'olio)
(1986-92)

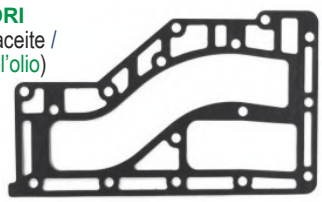

Ref.	R.O.
REC676-41112-A0	27-83338M

MOTORES / ENGINES / MOTORI
40 (Twin Carb)
40A, B, C
(1977-92)

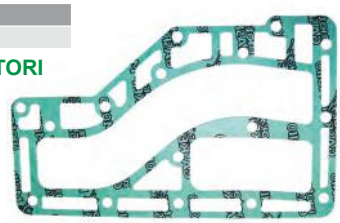

Ref.	R.O.
REC663-41114-00	27-81331M

MOTORES / ENGINES / MOTORI
40, W-48
55, W-55
60 (2 cyl)
(1977-89)

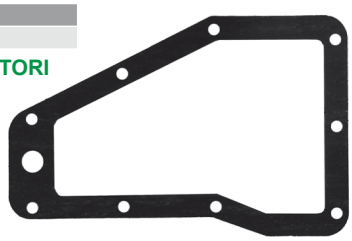

Ref.	R.O.
REC27-430057	27-430057

MOTORES / ENGINES / MOTORI
75, 90 HP (3 cyl)



Ref.	R.O.
REC887825	27-887825

MOTORES / ENGINES / MOTORI
225 EFI (4 T / 4 Strokes / 4 Tempi)
(2003-06)

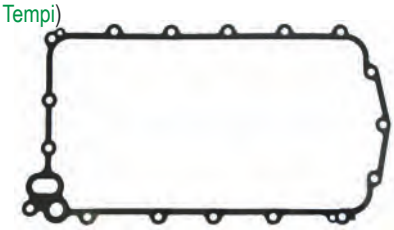

JUNTAS ADMISIÓN
GASKET, INTAKE
GUARNIZIONE SISTEMA ASPIRAZIONE

Ref.	R.O.
PAGB/T3452.1-35.5x1.	25-825057003

MOTORES / ENGINES / MOTORI
2.5 / 3.5 HP (4 T / 4 Strokes / 4 Tempi)
8 HP (4 T / 4 Strokes / 4 Tempi) (209cc)
9.9 HP (4 T / 4 Strokes / 4 Tempi) (209cc)



Ref.	R.O.
REC27-76636	27-76636

MOTORES / ENGINES / MOTORI
V6
150-200 HP
(1976-88)

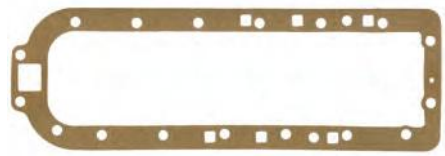

Ref.	R.O.
REC27-78690002	27-78690

MOTORES / ENGINES / MOTORI
V6
110-200 HP (2000-10)



Ref.	R.O.
REC27-677511	27-67751-1

MOTORES / ENGINES / MOTORI
V6
100-225 HP (1976-98)

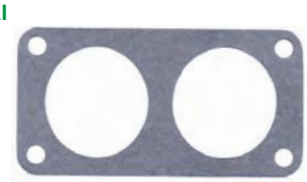

Ref.	R.O.
REC27-935361	27-93536-1

MOTORES / ENGINES / MOTORI
V6
135-200 HP (1976-90)



Ref.	R.O.
PAF15-07000007	25-853525

MOTORES / ENGINES / MOTORI
8 HP Bodensee (4 T / 4 Strokes / 4 Tempi)
9.9 HP (4 T / 4 Strokes / 4 Tempi) (323cc)
13.5 HP (4 T / 4 Strokes / 4 Tempi) (Int.)
15 HP (4 T / 4 Strokes / 4 Tempi)



Ref.	R.O.
PAF8-05000009	27-853525001

MOTORES / ENGINES / MOTORI
8 & 9.9 HP
(4 T / 4 Strokes / 4 Tempi)
(209cc)



Ref.	R.O.
PAF15-07000017	27-835383001

MOTORES / ENGINES / MOTORI
8 & 9.9 HP
(4 T / 4 Strokes / 4 Tempi)
(209cc)



Ref.	R.O.
PAGB3452.1-82	25-8250572

MOTORES / ENGINES / MOTORI
8-60 HP (4 T / Strokes / Tempi)



Ref.	R.O.
REC27-25849	27-25849

MOTORES / ENGINES / MOTORI
10-115 HP (1-6 cyl) (1970-85)



Ref.	R.O.
REC27-31402	27-31402

MOTORES / ENGINES / MOTORI
10-95 HP (1970-75)

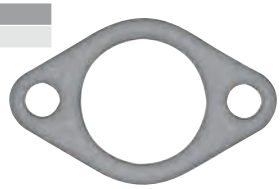

Ref.	R.O.
REC1399-99	1399-99

MOTORES / ENGINES / MOTORI
10-95 HP



Ref.	R.O.
REC414172	27-41417-2

MOTORES / ENGINES / MOTORI
15-25 HP (1977-06)

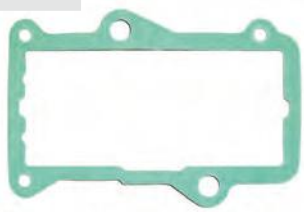

Ref.	R.O.
REC414181	27-41418-1

MOTORES / ENGINES / MOTORI
15-25 HP (1977-06)

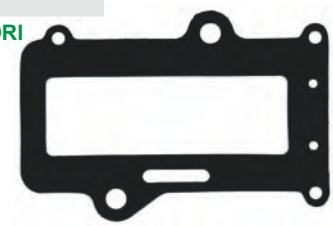

Ref.	R.O.
REC27-757911	27-75791

MOTORES / ENGINES / MOTORI
20-80 HP (1976-97)



Ref.	R.O.
PAF25-05000011	25-33466

MOTORES / ENGINES / MOTORI
25-220 HP



Ref.	R.O.
PAF25-05060003	878431

MOTORES / ENGINES / MOTORI
25 HP (4 T / 4 Strokes / 4 Tempi)



Ref.	R.O.
PAF25-05080004	855837

MOTORES / ENGINES / MOTORI
25 HP (4 T / 4 Strokes / 4 Tempi)



Ref.	R.O.
PAF25-05060002	855219

MOTORES / ENGINES / MOTORI
25 HP (4 T / 4 Strokes / 4 Tempi)



Ref.	R.O.
REC27-279361	27-27936-1

MOTORES / ENGINES / MOTORI
30 Jet
40/45 (4 cyl)
(1970-97)



Ref.	R.O.
REC27-987691	27-98769-1

MOTORES / ENGINES / MOTORI
30-250 HP (1976-10)



Ref.	R.O.
REC27-812868	27-812868

MOTORES / ENGINES / MOTORI
30, 40, 45 Jet
40, 50, 55, 60 (3 cyl)

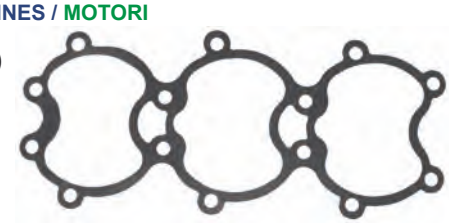

Ref.	R.O.
REC27-812869	27-812869

MOTORES / ENGINES / MOTORI
30-60 HP (1991-10)



Ref.	R.O.
REC27-821370	27-812370

MOTORES / ENGINES / MOTORI
30-40 HP (2 cyl)



Ref.	R.O.
REC27-552791	27-55279-1

MOTORES / ENGINES / MOTORI
35 - 40HP (1970-89)

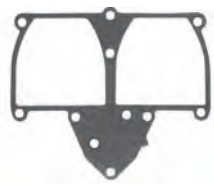

Ref.	R.O.
REC27-481641	27-48164-1

MOTORES / ENGINES / MOTORI
35 -150HP (1970-89)



Ref.	R.O.
REC27-733771	27-733771

MOTORES / ENGINES / MOTORI
50-60 Hp (3 cyl)



Ref.	R.O.
REC27-134612	27-134612

MOTORES / ENGINES / MOTORI
65/85 Jet
75-90 HP (3 cyl)
100-125 HP (4 cyl)
(1988-10)



Ref.	R.O.
REC27-139376	27-13937-6

MOTORES / ENGINES / MOTORI
65-125 HP (1988-2010)
65-125 HP (1988-01)



Ref.	R.O.
REC27-151724	27-15172-3

MOTORES / ENGINES / MOTORI
65 /80 Jet
75 / 90 (3 cyl)
100 /115 / 125 (4 cyl)
(1988-98)



Ref.	R.O.
REC27-76952	27-76952

MOTORES / ENGINES / MOTORI
70-85 HP (1976-86)



Ref.	R.O.
REC819113	27-819113

MOTORES / ENGINES / MOTORI
70-75 HP (1991-98)

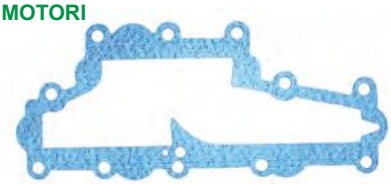

Ref.	R.O.
REC819114	27-819114

MOTORES / ENGINES / MOTORI
70-75 HP (1991-98)



Ref.	R.O.
REC27-62107	27-62107

MOTORES / ENGINES / MOTORI
80-85 HP (1970-75)



Ref.	R.O.
REC27-892211	27-89221-1

MOTORES / ENGINES / MOTORI
100-225 HP (1978-05)



Ref.	R.O.
REC27-883775	27-813859

MOTORES / ENGINES / MOTORI
135-240 HP (1990-00)

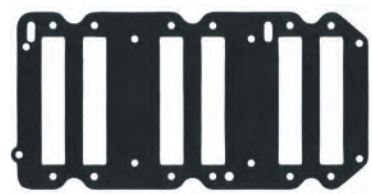

Ref.	R.O.
REC27-904301	27-90430-1

MOTORES / ENGINES / MOTORI
135-200 HP (1976-90)



Ref.	R.O.
REC856542	27-856542-1

MOTORES / ENGINES / MOTORI
135-225 HP (1998-99)
V 135-150 HP
200-225 (DFI)



Ref.	R.O.
REC27-672751	27-67275-1

MOTORES / ENGINES / MOTORI
135-200 HP V-Models
(1976-90)



Ref.	R.O.
REC847525	27-847525-1

MOTORES / ENGINES / MOTORI
150-300 HP (1990-05)

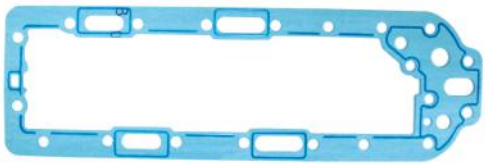

Ref.	R.O.
REC27-657443	27-65744-2

MOTORES / ENGINES / MOTORI
175-250 HP (1976-94)



Ref.	R.O.
REC27-8141951	27-814195-1

MOTORES / ENGINES / MOTORI
200-250 HP (1994-02)

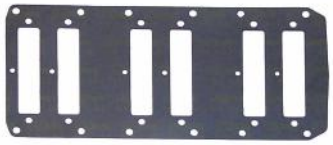

Ref.	R.O.
REC27-850283	27-850283

MOTORES / ENGINES / MOTORI
200-225 DFI (1998-99)



Ref.	R.O.
REC27-877361	27-87736-1

MOTORES / ENGINES / MOTORI
V-200

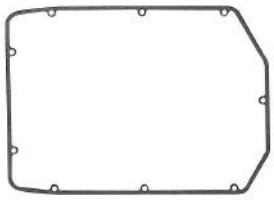

Ref.	R.O.
REC27-967611	27-96761-1

MOTORES / ENGINES / MOTORI
V-200 (1978-90)

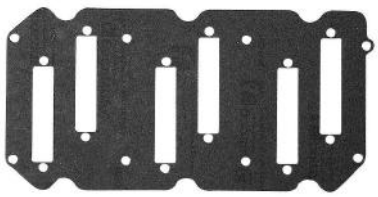

Ref.	R.O.
REC27-993163	27-993163

MOTORES / ENGINES / MOTORI
280-300 HP Racing (1991-05)



JUNTAS CULATÍN
GASKET, HEAD COVER
GUARNIZIONE COPERCHIO TESTA

Ref.	R.O.
REC27-78410	27-78410

MOTORES / ENGINES / MOTORI
20 HP (1978-80)

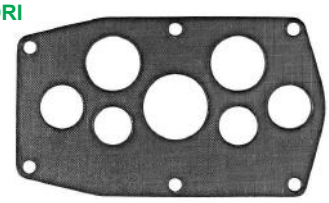

Ref.	R.O.
REC27-437772	27-43777-2

MOTORES / ENGINES / MOTORI
30 Jet
40 -50 HP (4 cyl) (1980-97)

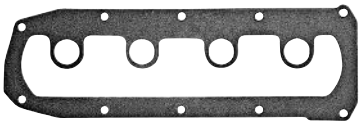

Ref.	R.O.
REC27-856729	27-85490-2

MOTORES / ENGINES / MOTORI
35/40 (2 cyl) (1980-89)



Ref.	R.O.
REC6E9-11193-A0	27-97704M

MOTORES / ENGINES / MOTORI
40C / 40 Twin Carb

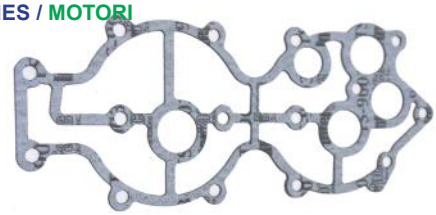

Ref.	R.O.
REC663-11193-00	27-81254M

MOTORES / ENGINES / MOTORI
48 / 55 /N48
60 (2 cyl)

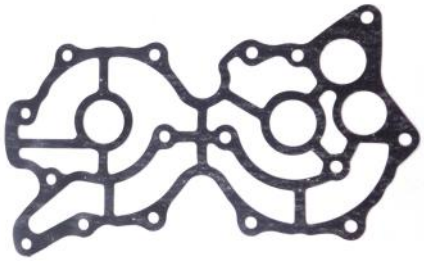

Ref.	R.O.
REC27-85487	27-85487

MOTORES / ENGINES / MOTORI
45/50 HP (4 cyl) (1980-86)

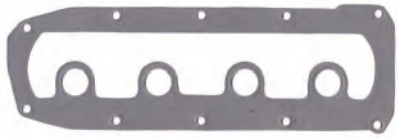

Ref.	R.O.
REC27-437792	27-43779-2

MOTORES / ENGINES / MOTORI
50-60 HP (3 cyl) (1984-90)



Ref.	R.O.
REC27-88449	27-88449

MOTORES / ENGINES / MOTORI
50- 70 HP (3 cyl) (1980-90)

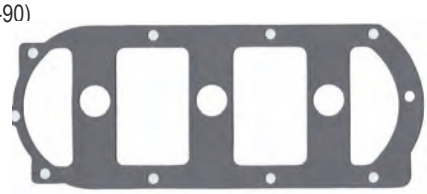

Ref.	R.O.
REC27-96278	27-96278

MOTORES / ENGINES / MOTORI
135-200 HP (V-Models)
(1976-88)



Ref.	R.O.
REC951853	27-95183-3

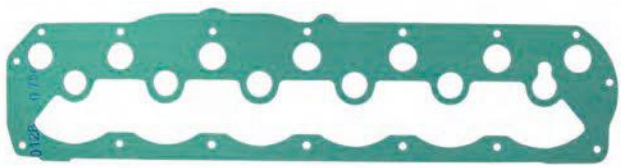

JUNTAS COLECTOR Y CARTER
GASKETS, UPPERCASING, OIL PAN, MANIFOLD
GUARNIZIONI COLLETTORE E CARTER

Ref.	R.O.
REC646-14623-A1	27-80355

MOTORES / ENGINES / MOTORI
2B, A

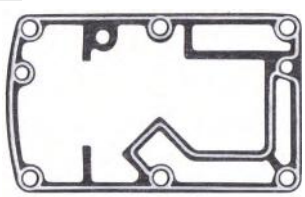

Ref.	R.O.
REC676-45114-A1	27-19175

MOTORES / ENGINES / MOTORI
K 40HP
W40
40/40C Twin Carb

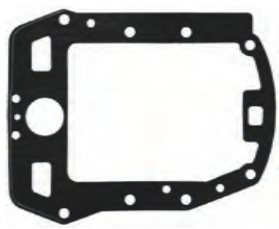

Ref.	R.O.
REC682-45113-A0	27-96618

MOTORES / ENGINES / MOTORI
9.9C / 15C
15K
W15



Ref.	R.O.
REC697-45114-00	27-98952M

MOTORES / ENGINES / MOTORI
55 / W-55
W-40

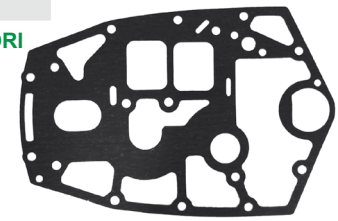

JUNTAS ESCAPE
EXHAUST GASKET
GUARNIZIONE SCARICO

Ref.	R.O.
REC6G1-41133-A0	27-11568M

MOTORES / ENGINES / MOTORI
6C/D
8C



Ref.	R.O.
REC682-41133-A0	27-83955M

MOTORES / ENGINES / MOTORI
9.9C
15C/K
W15



Ref.	R.O.
REC414991	27-414991

MOTORES / ENGINES / MOTORI
15 Sea Pro
18, 18XD
20, 20XD
25 XD, Sea Pro
(1977-06)



Ref.	R.O.
REC414758	27-41475-8

MOTORES / ENGINES / MOTORI
15 Sea Pro / Marathon
18, XD
20, XD
25, Marathon. Sea Pro, Xd, Xs
Super 15
(1977-04)

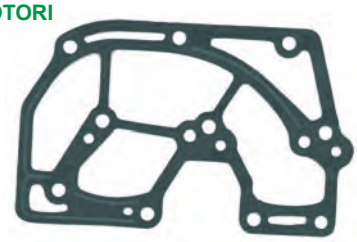

Ref.	R.O.
REC27-433374	27-43337-4

MOTORES / ENGINES / MOTORI
15 Sea Pro / Marathon
18 HP
20 (2 cyl) Jet
25 Sea Pro / Marathon



Ref.	R.O.
REC327674	27-327674

MOTORES / ENGINES / MOTORI
20, 25, 25C, 30, 35 HP



Ref.	R.O.
REC664-41134-A0	27-826991M

MOTORES / ENGINES / MOTORI
25K

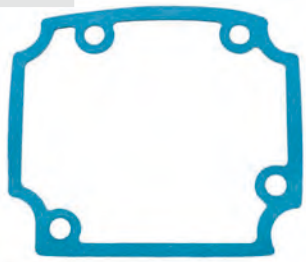

Ref.	R.O.
REC892320	27-892320

MOTORES / ENGINES / MOTORI
25-60 HP (Carb & EFI)
(4 T / 4 Strokes / 4 Tempi)



Ref.	R.O.
REC27-385011	27-38501-1

MOTORES / ENGINES / MOTORI
30 Jet
35
40, 45 (4cyl)
50, 60 (3cyl)
(1970-97)



Ref.	R.O.
REC27-854924	27-85492-2

MOTORES / ENGINES / MOTORI
30 Jet
40-45 Hp (2 cyl)
(1980-97)

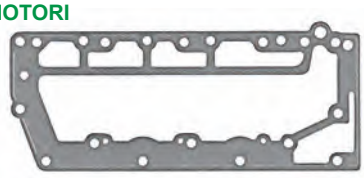

Ref.	R.O.
REC27-66847	27-66847

MOTORES / ENGINES / MOTORI
35-40 HP (2 cyl) (1972-89)



Ref.	R.O.
REC826738	27-826738

MOTORES / ENGINES / MOTORI
40 - 50HP (1995-97)

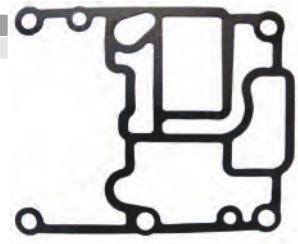

Ref.	R.O.
REC676-41133-A0	27-83383M

MOTORES / ENGINES / MOTORI
40, A, B, C (Twin Carb)
K40 / W40

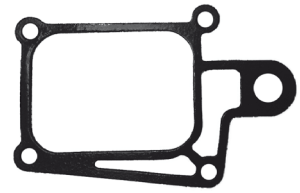

Ref.	R.O.
REC676-45128-00	83386M

MOTORES / ENGINES / MOTORI
40, A, B, C (Twin Carb)

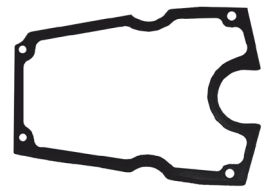

Ref.	R.O.
REC676-45127-00	83384M

MOTORES / ENGINES / MOTORI
40, A, B, C (Twin Carb)
K40 / W40



Ref.	R.O.
REC688-45123-00	27-81440M

MOTORES / ENGINES / MOTORI
48 / W-48
55
60 (2 cyl)



Ref.	R.O.
REC663-45123-00	27-81440M

MOTORES / ENGINES / MOTORI
48 W-55
55 60 (2 cyl)
W-48



Ref.	R.O.
REC27-695242	27-69524-2

MOTORES / ENGINES / MOTORI
50-60 HP (3 cyl)

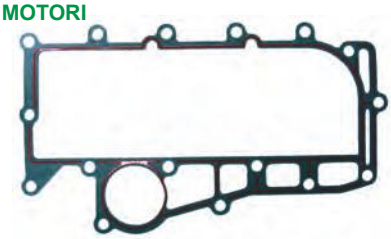

Ref.	R.O.
REC27-695252	27-69525-2

MOTORES / ENGINES / MOTORI
50-70 HP(3 cyl) (1973-90)

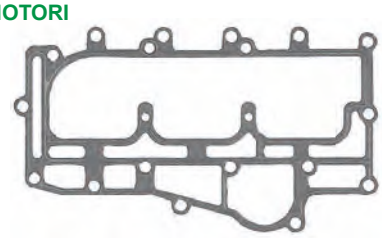

Ref.	R.O.
REC27-703351	27-70335-1

MOTORES / ENGINES / MOTORI
50-70 HP(3cyl) (1973-90)



Ref.	R.O.
REC27-430086	27-43008

MOTORES / ENGINES / MOTORI
65, 80 Jet
75, 90 (3 cyl)
100, 115, 125 (4 cyl)
75, 90, 115 DFI (3cyl) 1.5L
(1987-10)

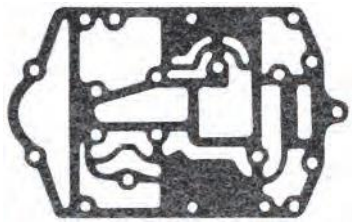

Ref.	R.O.
REC27-43004009	27-43004-1

MOTORES / ENGINES / MOTORI
65-90 HP (3 cyl)
(1987-10)

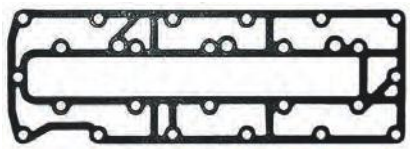

Ref.	R.O.
REC27-8127755	27-812775-5

MOTORES / ENGINES / MOTORI
80 Jet
100-125 (4 cyl)
(1994-98)



Ref.	R.O.
REC27-139581	27-13958-1

MOTORES / ENGINES / MOTORI
80 Jet
100-125 HP (4 cyl)
(1988-06)



Ref.	R.O.
REC27-812775A01	27-812775-4

MOTORES / ENGINES / MOTORI
80 Jet
100-125 (4 cyl)
(1994-98)



Ref.	R.O.
REC27-692381	27-69238-1

MOTORES / ENGINES / MOTORI
90-115 HP (6 cyl) (1980-88)



Ref.	R.O.
REC27-856730	27-85653-1

MOTORES / ENGINES / MOTORI
90-115 HP (6 cyl) (1973-88)

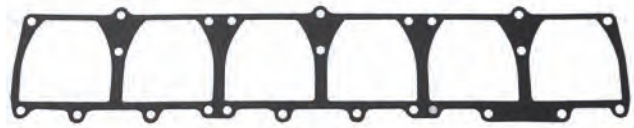

Ref.	R.O.
REC27-991734	27-99173-2

MOTORES / ENGINES / MOTORI
115-200 HP (V-Models)
XR-4 / XR-6
105-140 Jet
150-175 Prox5
(1976-10)

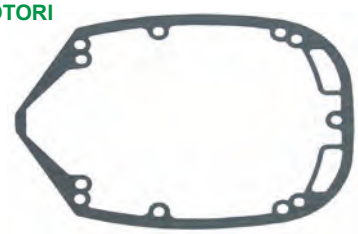

Ref.	R.O.
REC27-904841	27-90484-1

MOTORES / ENGINES / MOTORI
135-225 (V-Models)
XR-4
(1976-90)

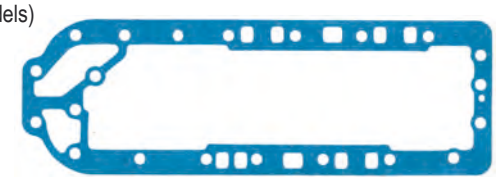

Ref.	R.O.
REC27-782461	27-78246

MOTORES / ENGINES / MOTORI
135-225 HP (V-Models)
XR-4 / XR-6
105-140 HP Jet
150-225 HP (Pro Xs / Pro max)
(1978-10)

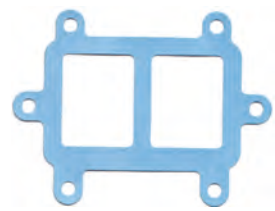

Ref.	R.O.
REC27-75786	27-75786

MOTORES / ENGINES / MOTORI
V-175 (1976-88)

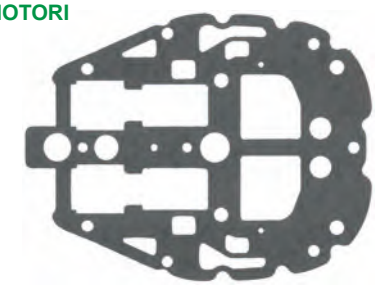

Ref.	R.O.
REC27-78411	27-78411

MOTORES / ENGINES / MOTORI
200/20 HP (1978-80)

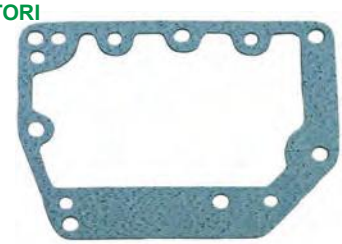

Ref.	R.O.
REC27-78409	27-78409

MOTORES / ENGINES / MOTORI
200/20 (1978-80)



Ref.	R.O.
REC27-39402	27-39402

MOTORES / ENGINES / MOTORI
200-20 HP (1970-80)



Ref.	R.O.
REC27-48801	27-48801

MOTORES / ENGINES / MOTORI
1150
1250
1350
80, 650, 800 (4cyl)
(1970-72)



CARBURADOR
CARTURATOR
CARBURATORE

Ref.	R.O.
PAF8-05040000	339-895110T01, 339-895110T11

MOTORES / ENGINES / MOTORI
8 & 9.9 (4 T / 4 Strokes / 4 Tempi)
(209 cc)
OP325500+



GUÍA CARBURADOR
CARBURATOR GUIDE
GUIDE CARBURATORE

HP	SERIE SERIAL SERIE	CARBURADOR CARBURATOR CARBURATORE	KIT	BOYA FLOAT GALLEGIANTE
2.5	017000 +	**REC3303-8231752**		
3.	0A855097 a / to / a 0G710612	**REC3303-8231752**		
3.3	0D901217 +	**REC3303-8231752**		
4 & 5 (2T / 2 stroke/ 2 tempi)	0P017000+	**REC3303-812648T**	**REC6G1-W0093-00**	**REC16253**
4/5	9589154 a / to / a OP016999	**REC3303-812648T**	**REC6G1-W0093-00**	**REC16253**
4/5 (1Cyl. Japan)	9542671 +	**REC3303-812648T**	**REC6G1-W0093-00**	**REC16253**



REC3303-8231752

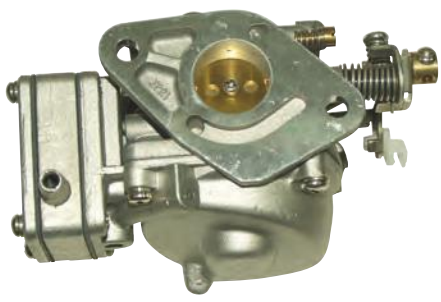

REC3303-812648T

KITS CARBURADOR
CARBURETOR KIT
KIT CARBURATORI

Ref.	R.O.
REC6E9-W0093-02	17068M

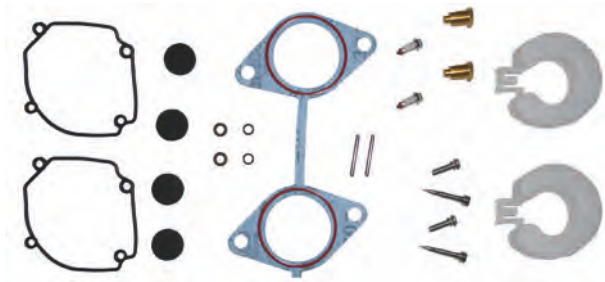

Ref.	R.O.
REC6F6-W0093-00	611810M



Ref.	R.O.
REC6H1-W0093-01-00	84475M



Ref.	R.O.
REC66M-W0093-01	802706A1

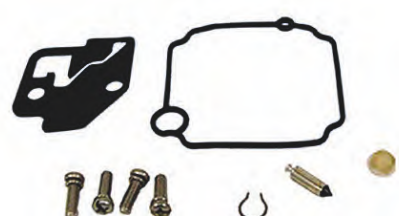

Ref.	R.O.
REC6E9-W0093-03	97667M



Ref.	R.O.
REC67F-W0093-00	804346T01, 804346T1, 804346T02



Ref.	R.O.
REC6A1-W0093-01	92520M

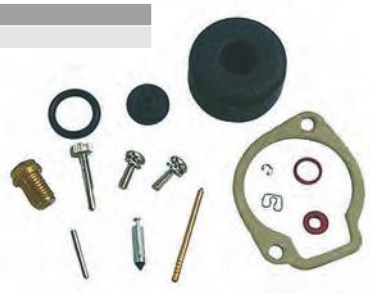

Ref.	R.O.
REC6G1-W0093-00	11502M



Ref.	R.O.
REC696-W0093-00	84419M

Contenido para dos carburadores
For two carburetors
Contenuto per due carburatori

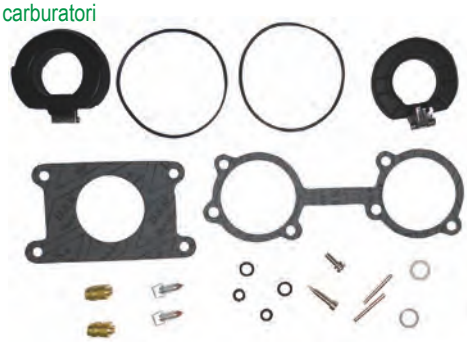

Ref.	R.O.
REC6E7-W0093-01	814481M



Ref.	R.O.
REC689-W0093-02	84456M



Ref.	R.O.
REC677-W0093-00	84473M



Ref.	R.O.
REC1395-811691-2	1395-811691 2

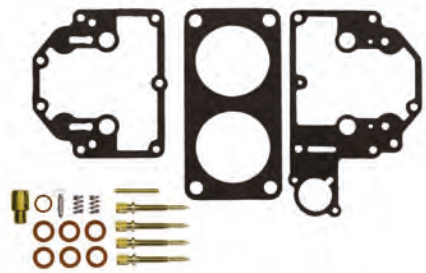

Ref.	R.O.
REC1395-811691-3	1395-811691 3



Ref.	R.O.
REC1395-823635-4	1395-823635-4



Ref.	R.O.
REC1395-9650	



Ref.	R.O.
REC8542561	854256 1

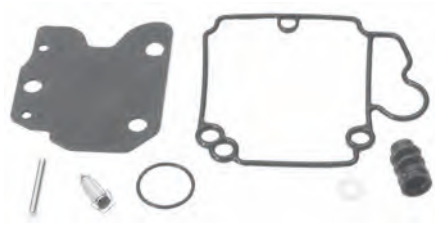

Ref.	R.O.
REC1395-48401	1395-4808-1



Ref.	R.O.
REC1395-6200	1395-6200

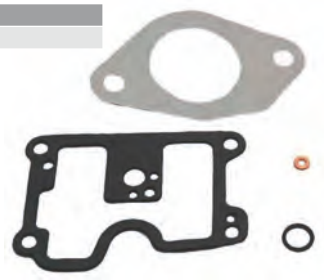

Ref.	R.O.
REC1395-6452	1395-6452, 1395-8506



Ref.	R.O.
REC1395-9651	1395-9651

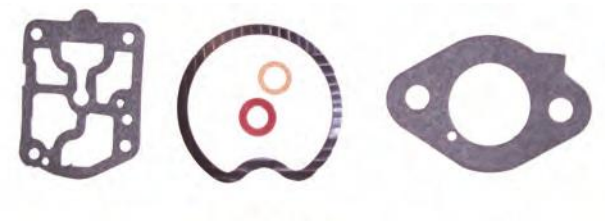

Ref.	R.O.
REC1395-2015	1399-1717, 1399-2015, 1399-3523



Ref.	R.O.
REC1395-5198	1399-5135, 1399-5198

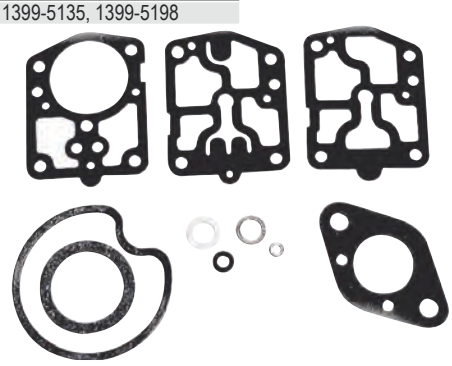

Ref.	R.O.
REC40470	1395-9262-1



Ref.	R.O.
REC1399-5137	1399-5137



Ref.	R.O.
REC40480	1395-5109-1



Ref.	R.O.
REC1395-8112231	1395-811223-1



Ref.	R.O.
REC8107492	810749-2

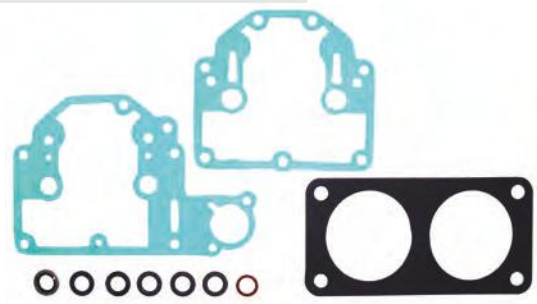

Ref.	R.O.
REC8107493	810749-3



Ref.	R.O.
REC1395-9024	1395-9024

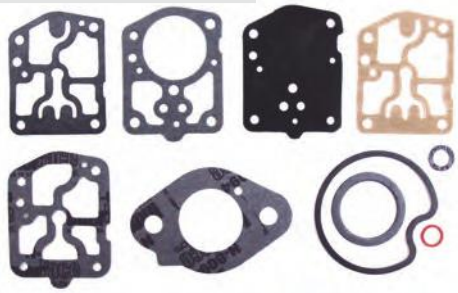

GUÍA KITS CARBURADOR
CARBURATOR SET GUIDE
GUIDE KITS CARBURATORE

4 TIEMPOS / 4 STROKES

HP	SERIE / SERIAL / SERIE	REF
8 (Bodensee)	0P400999+	REC66M-W0093-01
9.9 (323cc)	0P075166 - 0P400999	REC66M-W0093-01
13.5 Internat.	0P134638+	REC66M-W0093-01
15	0P9973100+	REC66M-W0093-01
75 (Bodensee)	0G960500 - 1B226999	REC67F-W0093-00
90	0G960500 - 1B226999	REC67F-W0093-00
25	9973100+	REC8542561
30	0P017000 - 0P153499	REC8542561
30 CARB (3 cyl)	0P153500 - 0P400999	REC8542561
40	0P017000 - 0P153499	REC8542561
40 CARB (3 cyl)	0P153500+	REC8542561
40 (4 cyl)	0P094500 - 0P206999	REC8542561
50 (4 cyl)	0P094500 - 0P206999	REC8542561
60 (4 cyl)	0P094500 - 0P206999	REC8542561

2 TIEMPOS / 2 STROKES

HP	SERIE / SERIAL / SERIE	REF
2B	6A1-000101 +	REC6A1-W0093-01
6	9464526 +	REC1395-97611
6 C/ D	6H8 & 6H6	REC6G1-W0093-00
8	9461526 +	REC1395-97611
8 B	677	REC677-W0093-00
8 C	6G1	REC6G1-W0093-00
W8 (W/Marathon) M/ML/SUL	677	REC677-W0093-00
9.9	9461526 +	REC1395-97611
9.9 C	6E7/ 70-71 (682)	REC677-W0093-00
9.9 C	M-682-070796+ ML-682-368040+ E-682-251511+ EL-682-55146+	REC6E7-W0093-01
10 Sea Pro , Viking	Todas / All / tutti	REC1395-97611
15	9542620 +	REC1395-97611
15 SeaPro	992700 +	REC1395-97611
15 Viking	OP32550 +	REC1395-97611
15C	6E8/ 71 (684)	REC6E7-W0093-01
15 C	M-684-052848+ ML-684-332302+ E-684-252381+ EL-684-553251+	REC6E7-W0093-01
20 (2 cyl)	9415101 +	REC1395-97611
20 JET	9807909 - OP016999	REC1395-97611
25 (2 cyl)	9415101 +	REC1395-97611
25, 25 SeaPro (super 15)	9415101 +	REC1395-97611
25A	M-648-24991+ ML-648-64046+ E-648-27056+ EL-648-56526+	REC689-W0093-02

HP	SERIE / SERIAL / SERIE	REF
25 C	695	REC689-W0093-02
28	M-664-05306+ ML-664-41686+ E-664-26236+ EL-664-57421+	REC689-W0093-02
30 (2Cyl)	9854537+	REC1395-823635-4
30A	M-689-230100+ ML-689-530100+ E-689-250100+ EL-689-550100+	REC689-W0093-02
30 Jet (3Cyl)	9973100+	REC1395-823635-4
30 Jet	9570790+	REC1395-9650
40 (2 Cyl)	9854537+	REC1395-823635-4
40 (3 Cyl)	9973100+	REC1395-823635-4
40 (4 Cyl)	9570790+	REC1395-9650
40 (Twin Carb)	6E9-000106 -42316	REC6E9-W0093-03
40 (Twin Carb) (w/oil inject) (w/auto blend)	6E9-	REC6E9-W0093-02
40 A/ B (above / thru prop. exhaust)	676	REC6H1-W0093-01-00
40 (W/Marathon)	6F6	REC6F6-W0093-00
40 Jet	0P094500+	REC1395-823635-4
45 Jet	9885385+	REC1395-823635-4
45 (4 Cyl(	9466692+	REC1395-9650
48	M-670-02641+ ML-670-34581+	REC696-W0093-00
W48	670	REC696-W0093-00
50 (3 Cyl)	9885345+	REC1395-823635-4
55 / W55	663	REC696-W0093-00
55 (3 Cyl)	9885345+	REC1395-823635-4
60	675	REC696-W0093-00
60 (3Cyl) & (BIGFOOT)	9885345+	REC1395-823635-4
65 Jet	9793577 - 0P325499	REC1395-823635-4
75 (3 Cyl)	9793577+	REC1395-823635-4
80 Jet	9793577 - 0P325499	REC1395-823635-4
90 (3 Cyl)	9793577+	REC1395-823635-4
100 (4 Cyl)	9523034 - 0P058999	REC1395-823635-4
115 (4 Cyl)	0P017000+	REC1395-823635-4
125 (4 Cyl)	3793577+	REC1395-823635-4
V-135/V-150/ V-175/V-200HP	0G303045 +	REC1395-811691-2
V-135/V-150/ V-175/V-200HP	0G303046 +	REC1395-811691-3
225HP (3.0L Carb) (Sea Pro)	0G303045+	REC1395-811691-2
225HP (3.0L Carb) (Sea Pro)	0G303046 +	REC1395-811691-3
XR-6	0G303045+	REC1395-811691-2
XR-6	0G303046+	REC1395-811691-3

KITS AGUJA CARBURADOR
NEEDLE VALVE SETS
KIT SPILLO CONICO CARBURATORE

Ref.	R.O.
REC6H3-14590-00	17050M

MOTORES / ENGINES / MOTORI
4 T / 4 Strokes / 4 Tempi
75 (0G960500+)
75 BODENSEE (0G960500+)
90 (0G960500+)



Ref.	R.O.
REC6G1-14546-00	11490M

MOTORES / ENGINES / MOTORI
6C (6H8)
6D (6H6)
8C (6G1)



Ref.	R.O.
REC6E8-14390-12	14216M

MOTORES / ENGINES / MOTORI
W8 (677)
W15 (684)
15C (684) (6E8-04)



Ref.	R.O.
REC626-14390-90	80447M

MOTORES / ENGINES / MOTORI
15C (684) 9.9C (682)
8K (680) W8 (677)
8B (677) W15 (662)



Ref.	R.O.
REC677-14343-68	95495M

MOTORES / ENGINES / MOTORI
15C (684) (#136)
W15 (684)



Ref.	R.O.
REC1395-7824	1395-7824



Ref.	R.O.
REC1395-8318	1395-8318



Ref.	R.O.
REC1399-1473	1395-9258, 1399-1138, 1399-1473



Ref.	R.O.
REC19271-1	19271-1



Ref.	R.O.
REC1395-811690-1	1395-811690-1



AGUJA CARBURADOR
NEEDLE VALVE
SPILLO CONICO CARBURATORE

Ref.	R.O.
REC1395-9595-1	1395-9595-1



Ref.	R.O.
REC809570-1	809570-1



Ref.	R.O.
REC1395-9022	1395-9022



TORNILLOS CARBURADOR
BOLT SCREW
VITI CARBURATORE

Ref.	R.O.
REC647-14323-00	10-80573M

MOTORES / ENGINES / MOTORI
4A 20C
5A/ C 25C / K / K25 / W25
8A / B / K / W8 28
9.9C 30A / W30
15A / C / K



Ref.	R.O.
REC6A0-14325-00	10-41889M

MOTORES / ENGINES / MOTORI
8 - 50 HP
M3x5



BOYAS
FLOATS
GALLEGGIANTI

Ref.	R.O.
REC16253	16253

MOTORES / ENGINES / MOTORI
2 T / 2 Strokes / 2 Tempi
4, 5, 6, 8, 9.8 HP



Ref.	R.O.
REC647-14385-00	80450M

MOTORES / ENGINES / MOTORI
4A 15A / C / K / W15
5A/C K40
8A / B / K-L-S W8 (M)(ML)(SVL)
9.9C



Ref.	R.O.
REC6E7-14385-00	14180M

MOTORES / ENGINES / MOTORI
4A (M070824-ML325784+)
5C (M144067-ML425197+)
W8
9.9C (6E7-72)
15C / W15 (6E8-04)



Ref.	R.O.
REC6G1-14985-00	11489M

MOTORES / ENGINES / MOTORI
6C / 6D
8C



Ref.	R.O.
REC676-14966-00	22-83369M

MOTORES / ENGINES / MOTORI
6C/ D
40A / B / C
75 (4 T / 4 Strokes / 4 Tempi)
90 (4 T / 4 Strokes / 4 Tempi)



Ref.	R.O.
REC809569	809569

MOTORES / ENGINES / MOTORI
(4 T / 4 Strokes / 4 Tempi)
9, 9.9, 13.5, 40, 45, 50 HP

Ref.	R.O.
REC648-14385-00	80591M

MOTORES / ENGINES / MOTORI
20C
25C / K / K25 / W25
28
30A / W30



Ref.	R.O.
REC1395-7623	1395-7623, 1395-9267



Ref.	R.O.
REC1395-8673	1395-8983, 1395-8673



Ref.	R.O.
REC1395-9594	1395-9293



Ref.	R.O.
REC8M6000359	8M6000359, 880596504, 880596522, 880596524, 8M0007943



KIT

Ref.	R.O.
REC19273	19273

MOTORES / ENGINES / MOTORI
WM-3, 5, 6, 8, 9, 10, 77, 12, 13, 13A, 14, 15 ,15A, 16, 16A, 17, 18





PASADOR BOYA
PIN FLOAT
SPINOTTO GALLEGGIANTE

REF.	R.O. OEM	Motor Engine Motore
REC647-14386-10	17-80451M	4A 5C 8A / K / W8 8 Bondensee / Inter. (4 T / 4 Strokes / 4 Tempi) 9.9C (323 cc. 4 T / 4 Strokes / 4 Tempi) 15C / K / W15
REC688-14548-00	17-97730M	6C / D 8C 40C
REC676-14186-00	17-92639M	6C/ D 8C 40A / B / C W-48 55 W-55 60 (2 cyl) 75 (4 T / 4 Strokes / 4 Tempi) 90 (4 T / 4 Strokes / 4 Tempi)
REC6E5-14386-01	17-11794M	9.9 / 13.5 / 15HP (4 T / 4 Strokes / 4 Tempi) 40 / 45 / 50HP (4 T / 4 Strokes / 4 Tempi) 20C / 25K / 30A / K40 / 40 Italy
REC663-14548-00	17-81278M	40A 40B 48 / W-48 55 60 (2 cyl)





CABLE ACELERADOR
THROTTLE CABLE
CAVO ACCELLERATORE

REF.	R.O. OEM	Motor Engine Motore	Cambio SHIFT
REC43242-5	43242-5	30 HP, 2 cyl	
	43242-7	40 HP, 2 cyl	
REC43242-6	43242-6	6 HP / 8 HP / 9.9 HP, XR10 10 Magnum, Marathon, Sea Pro Viking, 15 hp Marathon, Sea Pro Viking, 20 (2 cyl.), 20 Jet 25 Marathon, Sea Pro	Lateral Side Laterale
REC43242-9	43242-9	6 HP / 8 HP / 9.9 HP / 9.9 HP (4T) XR10, 10 Magnum 13.5 HP (4T), 15 HP, 15 HP(4T)	Manual Handle Manuale
REC43242-3	43242-3	15 Marathon XP, 15 Sea Pro XP 20 (2 cyl.) 20 Jet, 25 (2 cyl.) 25 Marathon (2 cyl.), 25 Sea Pro (2 cyl.)	Manual Handle Manuale
REC43242-5	86210	7.5 HP & 9.8 HP	Lateral Side Laterale
REC677-26301-02	95405M	8K / W8	
REC6E0-26301-01	11921M	4AC / A/ AS 5C / CS / CMH	



BOMBA COMBUSTIBLE
FUEL PUMP
POMPA BENZINA

BOMBAS MECÁNICAS
MANUAL FUEL PUMP
POMPA DE BENZINA MANUALE

Ref.	R.O.
PAF15-07140000	835389A2, 835389T1, 835389T02

MOTORES / ENGINES / MOTORI
8 (BODENSEE (4 T / 4 Strokes / 4 Tempi)
15 (4 T / 4 Strokes / 4 Tempi)
13.5 (4 T / 4 Strokes / 4 Tempi) Inter.
9.9 (4 T / 4 Strokes / 4 Tempi) 323 cc



Ref.	R.O.
REC692-24410-00	43113M, 43113T

MOTORES / ENGINES / MOTORI
15
20C / 25C (Thru prop. exhaust)
30A
40 (Twin Carb) (W/oil injection) (w/auto-blend)
55
W-55

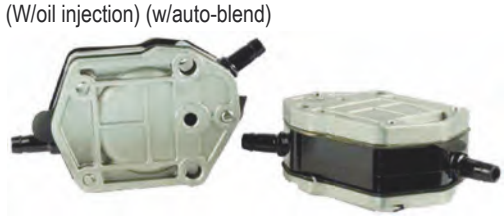

Ref.	R.O.
PAF25-05130000	826398T3

MOTORES / ENGINES / MOTORI
25-60 HP (4 T / 4 Strokes / 4 Tempi)



Ref.	R.O.
REC899106T01	899106T01, 892874T01
	808505T, 827682T

MOTORES / ENGINES / MOTORI
30, 40 HP EFI (3 cyl)
40, 50, 60 HP EFI (4 cyl)
(4 T / 4 Strokes / 4 Tempi)



Ref.	R.O.
REC68V-24410-00	880890T1

MOTORES / ENGINES / MOTORI
75 HP (OT409000+)
75 Bodensee (OT40900+)
90 HP (OT409000+)
115 EFI (OT178500 - 1B366822)
(4 T / 4 Strokes / 4 Tempi)



BOMBAS ELÉCTRICAS
ELECTRIC FUEL PUMP
POMPA DE BENZINA ELETTRICA

Ref.	R.O.
RM881705T1	881705T1

MOTORES / ENGINES / MOTORI
200, 225, 250 HP 3.0L EFI
V-150, V-175, V-200, 2,52 EFI



Ref.	R.O.
REC67H-13907-00	809088T1, 809088T01



Ref.	R.O.
REC880596T55	880596T55



Ref.	R.O.
REC880596T58	880596T58



Ref.	R.O.
REC883202T02	883202T02, 883202A02



Ref.	R.O.
REC898101T67	898101T67



Ref.	R.O.
REC888733T02	888733T02, 888733T1



Ref.	R.O.
REC69J-13907-03	888246T, 888246T01



Ref.	R.O.
REC8M0047624	8M0047324, 8558432



Ref.	R.O.
REC861155A3	861155A3, 8611552



Ref.	R.O.
REC14307T01	14307T01, 14307, A1



Ref.	R.O.
REC63P-13907-03	880889T, 880889T01

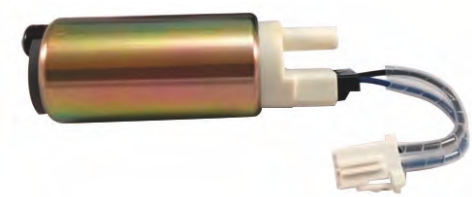

Ref.	R.O.
REC69J-24410-02	888251T, 888251T02



JUNTAS VST
VST GASKETS
GUARNIZIONE VST

Ref.	R.O.
REC27-883213	27-883213

MOTORES / ENGINES / MOTORI
30/40 EFI (3Cyl)
40 / 50 / 60 efi (4 Cyl)
(4 T / 4 Strokes / 4 Tempi)
Formula 60 (Race Outboard)



Ref.	R.O.
REC26-880596502	26-880596502

MOTORES / ENGINES / MOTORI
75 / 80/ 90 /110 /115 EFI
135 / 150 / 175 / 200 Verado (4 Cyl)
200 / 225 / 250 / 275 / 300 350 Verado (6 Cyl)
(4 T / 4 Strokes / 4 Tempi)

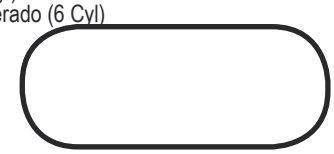

Ref.	R.O.
REC27-889319	27-889319

MOTORES / ENGINES / MOTORI
75 / 90 DFI, 80 Jet (3 Cyl) 1.5 L
115 / 125 DFI (3 Cyl) 1.5 L Pro xs
200 (3.0) DFI DTS
200 DFI 3.0L Pro xs
225 DFI 3.0L Pro xs

Race Outboard 225 x 5 (3.0 & 3.2L DFI)



Ref.	R.O.
REC27-883252	27-883252

MOTORES / ENGINES / MOTORI
110 Jet (2.5L9
150 / 175 Proxs (2.5 L)
200 / 225 / 250 (3.0 EFI)
V-135 - V-200 EFI/ DFI (2.5L)



Ref.	R.O.
REC68V-14984-00	27-81325

MOTORES / ENGINES / MOTORI
115 EFI
225 EFI
(4 T / 4 Strokes / 4 Tempi)



Ref.	R.O.
REC25-809086	25-809086

MOTORES / ENGINES / MOTORI
200 DEFI
225 / 250 (3.0L EFI)
V-150 - V-200 EFI



GUÍA BOMBAS ELÉCTRICAS DE COMBUSTIBLE Y FLOTADOR
ELECTRIC FUEL PUMP GUIDE & FLOAT
GUIDA POMPA DE BENZINA ELETTRICA E GALLEGGIANTI

MODELO MODEL MODELLO	Serie USA USA Serial Serie USA	SerieBEL BEL Serial Serie BEL	REF.	REF. HIGH	FLOTADOR FLOAT GALLEGGIANTE
25 EFI (3 CYL)	0R106999 +		REC898101T67		
25 Jet EFI (3 CYL)	0R165086 +		REC898101T67		
30 EFI (3 CYL)	0R106969 +		REC898101T67		
30 EFI (3 CYL)	- 1B036613	- 0P340241	REC883202T02		
40 EFI (3 & 4 CYL)	- 1B036613	- 0P340241	REC883202T02		
50 EFI (4 CYL)	- 1B036613	- 0P340241	REC883202T02		
60 EFI (4 CYL)	- 1B036613	- 0P340241	REC883202T02		
75 EFI	1B366823 - 2B094995		REC880596T58	REC880596T55	REC8M6000359
80 EFI	1B366823 - 2B094995	0P459572 - 2B094995	REC880596T58	REC880596T55	REC8M6000359
90 EFI	1B366823 - 2B094995		REC880596T58	REC880596T55	REC8M6000359
100 EFI	1B366823 - 2B094995	0P459572 - 2B094995	REC880596T58	REC880596T55	
115 EFI	0T178500 - 1B366822		REC63P-13907-03		
135 VERADO (4 CYL)	1B227001 - 1B517158	0P419487 - 0P514868	REC880596T58	REC880596T55	REC8M6000359
135 VERADO (4 CYL)	1B517159 +	0P514869 +	REC880596T58		REC8M6000359
150 VERADO (4 CYL)	1B227001 - 1B517158	0P419487 - 0P514868	REC880596T58	REC880596T55	REC8M6000359
150 VERADO (4 CYL)	1B517159 +	0P514869 +	REC880596T58		REC8M6000359
175 VERADO (4 CYL)	1B227001 - 1B517158	0P419487 - 0P514868	REC880596T58	REC880596T55	REC8M6000359
175 VERADO (4 CYL)	1B517159 +	0P514869 +	REC880596T58		REC8M6000359
200 VERADO (4 CYL)	1B517159 +	0P514869 +	REC880596T58		REC8M6000359
200 PRO VERADO (6 CYL)	2B034840 - 2B144122	2B034840 - 2B144122	REC880596T58	REC880596T55	REC8M6000359
200 VERADO (6 CYL)	0T980000 - 2B144122	0P409357 - 2B144122	REC880596T58	REC880596T55	REC8M6000359
225 EFI	0T653945 +		REC69J-13907-03	REC69J-24410-02	
225 VERADO (6 CYL)	0T980000 - 2B144122	0P409357 - 2B144122	REC880596T58	REC880596T55	REC8M6000359
225 PRO VERADO (6 CYL)	1B830170 - 2B144122	1B830170 - 2B144122	REC880596T58	REC880596T55	REC8M6000359
250 VERADO (6 CYL)	0T980000 - 2B144122	0P409357 - 2B144122	REC880596T58	REC880596T55	REC8M6000359
275 VERADO (6 CYL)	0T980000 - 2B144122	0P409357 - 2B144122	REC880596T58	REC880596T55	REC8M6000359
300 PRO VERADO (6 CYL)	1B830170 - 2B144122		REC880596T58	REC880596T55	REC8M6000359
300 VERADO (6 CYL)	1B517434 - 2B144122	0P520553 - 2B144122	REC880596T58	REC880596T55	REC8M6000359
350CSi VERADO	1B716557 - 2B143542	1B716557 - 2B143542	REC880596T58	REC880596T55	REC8M6000359

GUÍA BOMBAS ELÉCTRICAS DE COMBUSTIBLE
ELECTRIC FUEL PUMP GUIDE
GUIDA POMPA DE BENZINA ELETTRICA

MODELO MODEL MODELLO	Serie USA USA Serial Serie USA	SerieBEL BEL Serial Serie BEL	REF.
75 DFI (3 CYL)(1.5L)	0T980000 +		REC888733T02
80 JET (3 CYL)(1.5L)	1B586067 +		REC888733T02
90 DFI (3 CYL)(1.5L)	0T801000 +		REC888733T02
115 PROXS (3 CYL)(1.5L)	1B751825 +		REC888733T02
115DFI (3 CYL)(1.5L)	0T801000+		REC888733T02
V-115 TO V-175 DFI (2.5L)	ALLS		REC8M0047624
125 PROXS (3 CYL)(1.5L)	1B736885 +		REC888733T02
V-150 (EFI) 2.5L	0T409000 +		RM881705T1
V-150 (EFI)	0G303046 - 0T408999		REC67H-13907-00
V-175 XRI (EFI)	0D000750 - 0G303045		REC14307T01
V-175 (EFI) 2.5L	0T409000 - 0T800999		RM881705T1
V-175 (EFI)	0G303046 - 0T408999		REC67H-13907-00
V-200 (EFI) 2.5L	0T409000 +		RM881705T1
V-200 (EFI)	0C100861 - 0C999999		REC14307T01
V-200 (EFI)	0G303046 - 0T408999		REC67H-13907-00
V-200 XRI (EFI)	0D082000 - 0G303045		REC14307T01
200 (3.0L EFI)	0T750164 +		RM881705T1
200 PROXS (3 CYL)(3.0L)	1B504989 +		REC888733T02
200 & 225 (DFI) 3.0L	0T801000+		REC888733T02
200 & 225 (DFI)	0T599000 - 0T800999		REC888733T02
200 (3.0L) DFI (DTS)	0T599000 +		REC888733T02
V-220	0B117316 +		REC14307T01
200 & 225 (DFI)	OG590000 - OT598999		REC8M0047624
225 (3.0L EFI)	0T409000 +		RM881705T1
225 (3.0L EFI) SEAPRO	0T801000 - 1B417701		RM881705T1
225 PROXS (DFI)(3.0L)	1B104549 +		REC888733T02
225 (3.0L) DFI (DTS)	0T599000 +		REC888733T02
250 (3.0L EFI)	0T409000 +		RM881705T1
250 (DFI) 3.0L	1B528615 +		REC888733T02
250 LONG (3.0L EFI)	0T861319 +		RM881705T1
250 PROXS (3.0L)(DFI)	1B426561 +		REC888733T02
3.0L EFI SEAPRO	0T409000 - 0T800999		RM881705T1
Racing Outboard 200 XS & SST DFI (2.5L) ROS	1E050852 +		REC8M0047624
Racing Outboard 200 EFI ProMax/Super Max	0D935000 - 0G858150		REC67H-13907-00
Racing Outboard225 EFI ProMax/Super Max	0D935000 - 0T429939		REC67H-13907-00
Racing Outboard 225 SPORT XS		1E002584 +	REC888733T02
Racing Outboard 225 SPORT XS(3L)	1E000797 - 1E002583		REC888733T02
Racing Outboard 250 SPORT XS	1E002342 +		REC888733T02
Racing Outboard 250 (XS (3.0L DFI)	0T818043 - 1E051113		REC888733T02
Racing Outboard 300 (XS (3.2L DFI)	1E001867 +		REC888733T02
Racing Outboard JP 3.0L DFI	0T997974 +		REC888733T02
SPORT JET 240 EFI	Todos / Alls / Tutti		REC67H-13907-00
SPORT JET 200 DFI JET DRIVE	Todos / Alls / Tutti		REC8M0047624

MEMBRANAS BOMBA COMBUSTIBLE
FUEL PUMP DIAPHRAGMS
MEMBRANA POMPA BENZINA

Ref.	R.O.
REC6E0-24471-00	91748M

MOTORES / ENGINES / MOTORI
2B
4A
5C

Ref.	R.O.
REC6E0-24411-00	91753M

MOTORES / ENGINES / MOTORI
4A
5C

Ref.	R.O.
REC6G1-24411-00	11499M

MOTORES / ENGINES / MOTORI
6C/D
8C



Ref.	R.O.
REC6G1-24471-00	11497M

MOTORES / ENGINES / MOTORI
6C/D
8C



Ref.	R.O.
REC677-24411-02	84262M

MOTORES / ENGINES / MOTORI
8B/W8 (M)(ML)(SVL)
15C/W15
K40HP



Ref.	R.O.
REC677-24471-01	84265M

MOTORES / ENGINES / MOTORI
8B/W8 (M)(ML)(SVL)
15C/W15
K40HP



Ref.	R.O.
REC663-24411-00	84141M

MOTORES / ENGINES / MOTORI

8K	30A
15K / W15	40A, B, C
20C	48
W25 / 25K / C / K25 / 28	55 / W-55
W30	60 (2 cyl)
W40	K40



Ref.	R.O.
REC648-24411-00	80606M

MOTORES / ENGINES / MOTORI

8K	W30, 30A
20C, 28	W40 / K40 / 40A, B, C
48	K25
55	W48
W15, A, K	W55
W25, C	60 (2cyl)



JUNTAS BOMBA COMBUSTIBLE
FUEL PUMP GASKETS
GUARNIZIONI POMPA BENZINA

Ref.	R.O.
REC6E0-24434-00	27-91754M

MOTORES / ENGINES / MOTORI

4A
5C



Ref.	R.O.
REC6E0-24435-00	91746M

MOTORES / ENGINES / MOTORI

4A
5C
15K



Ref.	R.O.
REC6G1-24431-01	27-11500M

MOTORES / ENGINES / MOTORI

6C / D
8C



Ref.	R.O.
REC677-24435-01	27-84264

MOTORES / ENGINES / MOTORI

8B / W8	15C
9.9C	K40 HP



Ref.	R.O.
REC648-24434-01	27-80613M

MOTORES / ENGINES / MOTORI

8K 8L-S	48
15K (L)	55
25K (L)	60 (2 cyl)
K40 HP	W15
15A	W25
20C	W30
25C	W40
28	W48
30A	W55
40A, B, C	



Ref.	R.O.
REC648-24435-02	27-80614M

MOTORES / ENGINES / MOTORI

8K 8L-S	48
15K (L)	55
25K (L)	60 (2 cyl)
K40 HP	W15
15A	W25
20C	W30
25C	W40
28	W48
30A	W55
40A, B, C	



KIT BOMBA COMBUSTIBLE
SET, FUEL PUMP
KIT POMPA BENZINA

Ref.	R.O.
REC21-42990A10	21-42990A10

MOTORES / ENGINES / MOTORI

30 / 45 / 65 / 105 / 140 Jet
100 / 115 / 125 (4 cyl)
200 DFI
225 (3.0L) Carb / EFI / SeaPro
30 / 40 (2 cyl)
40 (3 cyl)
40 (4 cyl)
50 /55 / 60 / 75 / 90 (3 cyl)
V-135 - V-200 / XR-6



Ref.	R.O.
REC21-13424A1	21-13424A1

MOTORES / ENGINES / MOTORI

35 / 50 / 60 (3 cyl)



Ref.	R.O.
REC21-30430A13	21-30430A13

MOTORES / ENGINES / MOTORI

75 (4 cyl)



Ref.	R.O.
REC55278A5	55278A5

MOTORES / ENGINES / MOTORI

75 (4 cyl)



Ref.	R.O.
REC55278A4	55278A4



Ref.	R.O.
REC89031A3	89031A3

MOTORES / ENGINES / MOTORI
90 / 115 / 140 (6 cyl)



Ref.	R.O.
REC21-30430A14	21-30430A14

MOTORES / ENGINES / MOTORI
90/115 (6 cyl)



Ref.	R.O.
REC89031A1	89031A1



Ref.	R.O.
REC42909A3	42909A3

MOTORES / ENGINES / MOTORI
100/ 115 (4 cyl)



Ref.	R.O.
REC21-30430A7	21-30430A7

MOTORES / ENGINES / MOTORI
115 (6 cyl)
1150, 115
140, 1400
1500 (xs)
900, 90



Ref.	R.O.
REC89031A2	89031A2

MOTORES / ENGINES / MOTORI
V-135 / V-150 (Work / XR-2)
V-150 (Mag-Marathon)
V-1500
v-200 / V-175
300 (3.4L)



Ref.	R.O.
REC89031A4	89031A4

MOTORES / ENGINES / MOTORI
V-200



Ref.	R.O.
REC90363A1	90363A1

MOTORES / ENGINES / MOTORI
V-200
v-225



Ref.	R.O.
REC155278A1	155278A1

MOTORES / ENGINES / MOTORI
1150, 1350, 1400, 1500
400 (2 cyl)
402, 40 (2 cyl)
650 (3 cyl)



Ref.	R.O.
REC56678A1	56678A1

MOTORES / ENGINES / MOTORI
650 (4 cyl)



Ref.	R.O.
REC21-30430A4	21-30430A4

MOTORES / ENGINES / MOTORI
650 (4 cyl)



Ref.	R.O.
REC23014A1	23014A1

MOTORES / ENGINES / MOTORI
1000 BP / SS
1100
1250 / BP
200 / 350 / 500
650 / 800 / 80 (4 cyl)
950 (6 cyl)



Ref.	R.O.
REC21-30430A3	21-30430A3

MOTORES / ENGINES / MOTORI
1000 BP / SS
1100
1250 / BP
200 / 350 / 500
650 / 800 / 80 (4 cyl)
950 (6 cyl)



Ref.	R.O.
REC21-30430A1	21-30430A1

MOTORES / ENGINES / MOTORI
1000 BP / SS
1100
1250 / BP
200 / 350 / 500
650 (4 cyl)
800 / 80 (4 cyl)
950 (6 cyl)



GUÍA BOMBA GASOLINA
FUEL PUMP GUIDE
GUIDE POMPE BENZINA

MODELO MODEL MODELLO	AÑO YEAR ANNO	Nº SERIE SERIAL Nº. Nº SERIE	MEMBRANA DIAPHRAGM MEMBRANA	KIT JUNTAS GASKET KIT KIT GUARNIZIONI	KIT AGUJAS INLET NEEDLE KIT AGHI	BOYA FLOAT GALLEGGIANTE	KIT VÁLVULA VALVE KIT VALVOLA CHECK
3.9 (39)	1964-68	1655013-2498135 (KB-7A, KB-7B)		REC1395-2015	REC1399-1473	REC1395-8673	
4 (40) (1-cyl.)	1969-71	2498136-4107219 (KB-10A		REC1395-2015	REC1399-1473	REC1395-8673	
4 (1-cyl.)		(WMD-1)		REC1395-2015	REC1395-8318	REC1395-8673	
4 (1-cyl.)		A855097+				REC16253	
4.5 (1-cyl.)		(KB-10A)		REC1395-2015		REC1399-1473	
4.5 (1-cyl.)		(WMD-1)		REC1395-2015	REC1395-8318	REC1395-8673	
5 (1-cyl.)		A855097+				REC16253	
6		KB-6A, 6B		REC1395-2015	REC1399-1473	REC1395-8673	
6		(AJ-57A)			REC1399-1473	REC1395-8673	
6		(WMC-5, 5A, 5B, 7, 7A, 17, 17B, 17C, 18, 18A, 18B, 19, 19A, 20, 20A, 20B)	REC1395-97611	REC1395-97611			
6		(WMC-23, 28, 34, 39, 41, 41A, 47, 47A, 49, 49A, 57)	REC1395-97611	REC1395-97611			
6	1986-98	0A197112+	REC1395-97611				
6	1986-98	9461526+	REC1395-97611				
7.5 (7.5, 75)		(BB-2A, 2B, 2C, 4A, 5A, 5B, 5C, 5D, 7A, 7C)	REC1399-5137	REC1395-5198	REC1395-9022		
7.5 (7.5, 75)		(KB-9A, 12A)		REC1395-2015	REC1399-1473	REC1395-8673	
7.5		(WMB-2, 4)			REC1395-9022		
8		(WMC-5, 5A, 5B, 7, 7A, 17, 17B, 17C, 18, 18A, 18B, 19, 19A, 20, 20A, 20B)	REC1395-97611	REC1395-97611			
8		(WMC-23, 28, 34, 39, 41, 41A, 47, 47A, 49, 49A, 57)	REC1395-97611	REC1395-97611			
8	1986-98	0A197112+	REC1395-97611				
8	1986-98	9461526+	REC1395-97611				
9.8 (9.8, 110)		(BB-2A, 2B, 2C, 4A, 5A, 5B, 5C, 5D, 7A, 7C)	REC1399-5137	REC1395-5198	REC1395-9022		
9.8 (9.8, 110)		(KB-9A, 12A)		REC1395-2015	REC1399-1473	REC1395-8673	
9.8		(WMB-2, 4)			REC1395-9022		
9.9		(WMC-5, 5A, 5B, 7, 7A, 17, 17B, 17C, 18, 18A, 18B, 19, 19A, 20, 20A, 20B)	REC1395-97611	REC1395-97611			
9.9		(WMC-23, 28, 34, 39, 41, 41A, 47, 47A, 49, 49A, 57)	REC1395-97611	REC1395-97611			
9.9	1986-98	0A197112+	REC1395-97611				
9.9	1986-98	9461526 +	REC1395-97611				
9.9 4T	1999+	G60300-T97999		REC66M-W0093-01		REC809569	
10 (100)		(AJ-56AB)			REC1399-1473	REC1395-8673	

MODELO MODEL MODELLO	AÑO YEAR ANNO	Nº SERIE SERIAL Nº. Nº SERIE	MEMBRANA DIAPHRAGM MEMBRANA	KIT JUNTAS GASKET KIT KIT GUARNIZIONI	KIT AGUJAS INLET NEEDLE KIT AGHI	BOYA FLOAT GALLEGGIANTE	KIT VÁLVULA VALVE KIT VALVOLA CHECK
10 (100)		(KB-1A, 4A)		REC1395-2015	REC1399-1473	REC1395-8673	
10 (Sae Pro, Marathon)		(WMC-33, 33A, 40, 42, 50, 50A, 50B, 55, 55A)	REC1395-97611	REC1395-97611			
10 (XR10, Magnum 10)		(WMC-23, 48, 48A, 49, 49A)	REC1395-97611	REC1395-97611			
15 (150)		(KB-1A, 4A)		REC1395-2015	REC1399-1473	REC1395-8673	
15		(WMC-5, 5A, 5B, 7, 7A, 17, 17B, 17C, 18, 18A, 18B, 19, 19A, 20, 20A, 20B)	REC1395-97611	REC1395-97611			
15		WMC-23, 28, 34, 39, 41, 41A, 47, 47A, 49, 49A, 57)	REC1395-97611	REC1395-97611			
15	1988-98	0B292414+	REC1395-97611				
15	1988-98	9542620+	REC1395-97611				
15 (Super 15, 15XD)		(WMC-13, 13A, 14, 14A, 15A, 16A, 24, 25, 26, 27, 29, 30, 31, 31A, 32, 32A, 35, 35A, 35B, 36, 37, 44, 45, 46, 46A, 52, 52A, 53, 53A, 54, 54A, 56, 56A)	REC1395-97611	REC1395-97611			
15 (Sea Pro, Marathon)		(WMC-33, 33A, 40, 42, 50, 50A, 50B, 55, 55A)	REC1395-97611	REC1395-97611			
15 4T	1998+	G59000+		REC66M-W0093-01		REC809569	
18		(WMC-1, 2, 3, 4, 9, 10, 11, 12)	REC1395-97611	REC1395-97611			
18		(WMC-13, 13A, 14, 14A, 15A, 16A, 24, 25, 26, 27, 29, 30, 31, 31A, 32, 32A, 35, 35A, 35B, 36, 37, 44, 45, 46, 46A, 52, 52A, 53, 53A, 54, 54A, 56, 56A)	REC1395-97611	REC1395-97611			
20 (200)		(KA-22A, 22B, 22C, 23A, 25A)		REC1395-2015	REC1399-1473	REC1395-8673	
20 (200)	1966-67	1866496-2296266	REC23014A1				
20 (20, 200)		(BA-1A, 2A, 2C, 2D, 2E)	REC1399-5137	REC1395-5198			
20		(WMC-1, 2, 3, 4, 9, 10, 11, 12)	REC1395-97611	REC1395-97611			
20		(WMC-13, 13A, 14, 14A, 15A, 16A, 24, 25, 26, 27, 29, 30, 31, 31A, 32, 32A, 35, 35A, 35B, 36, 37, 44, 45, 46, 46A, 52, 52A, 53, 53A, 54, 54A, 56, 56A)	REC1395-97611	REC1395-97611			
20	1986-87	6443973+	REC1395-97611				
20	1986-87	9415101+	REC1395-97611				
20	1986-87	7209533+	REC1395-97611				
20 Jet	1994-98	0G044027 + (WMC-45, 53A)	REC1395-97611	REC1395-97611			
25 (2-cyl.)		(WMC-1, 2, 3, 4, 9, 10, 11, 12)	REC1395-97611	REC1395-97611			
25 (2-cyl.)		(WMC-13, 13A, 14, 14A, 15A, 16A, 24, 25, 26, 27, 29, 30, 31, 31A, 32, 32A, 35, 35A, 35B, 36, 37, 44, 45, 46, 46A, 52, 52A, 53, 53A, 54, 54A, 56, 56A)	REC1395-97611	REC1395-97611			
25	1984-87	6443973+	REC1395-97611				
25	1986-87	9415101+	REC1395-97611				
25	1986-87	7209533+	REC1395-97611				
30 (300) (4-cyl.)		(AJ-54A)			REC1399-1473	REC1395-8673	
30 (300) (4-cyl.)		(KB-2A)		REC1395-2015	REC1399-1473	REC1395-8673	
30 (2-cyl.) (644cc)	1994-98	0G053314+ (WME-36, 36A, 37, 39A, 42, 42A, 63, 64, 65, 66, 67)	REC21-42990A10	REC1395-8112231	REC1395-9595-1	REC1395-9594	
30 Jet (4-cyl.)		(WMA-10, 13)		REC1395-9651	REC1395-9595-1		
30 Jet (4-cyl.)		(WME-53, 68, 69)		REC1395-9651	REC1395-9595-1	REC1395-9594	
30 Jet	1994-97	0C159200+		REC21-42990A10			
30 Jet	1998	G590000+		REC21-42990A10			
35 (350)	1966-69	1960827-2874703	REC23014A1	REC21-30430A1			
35 (350) (4-cyl.)		(AJ-54A)			REC1399-1473	REC1395-8673	
35 (350) (4-cyl.)		(KB-2A)		REC1395-2015	REC1399-1473	REC1395-8673	
35 (2-cyl.)		(KC-4A, 8A, 9A, 9B, 9C, 13A)		REC1395-2015	REC1395-8318	REC1395-8673	
35	1984-86	6445653-0B110788	REC155278A1				REC21-13424A1
35	1984-86	9384476+	REC155278A1				REC21-13424A1
35	1984-86	209608+	REC155278A1				REC21-13424A1
35	1987-89	0B110789+	REC21-42990A10				
35	1987-89	9384476+	REC21-42990A10				
GLM40 (400) (4-cyl.)		(KA-2A, 9A)		REC1395-2015	REC1399-1473	REC1395-8673	
40 (40, 400, 402) (2-cyl.)		(KD-5A)		REC1395-2015	REC1399-1473	REC1395-8673	
40 (40, 400, 402) (2-cyl.)		(WMK-1, 8, 21, 24, 31, 33, 34, 38)		REC1395-2015	REC1399-1473	REC1395-8673	
40 (40, 400, 402) (2-cyl.)	1970-79	2874704-5556229	REC155278A1				
40 (40, 400, 402) (2-cyl.)	1972-79	8002335-8064749	REC155278A1				
40 (40, 400, 402) (2-cyl.)	1972-79	3339688-9251455	REC155278A1				
40 (40, 400, 402) (2-cyl.)	1972-79	3340783-7144762	REC155278A1				
40 (2-cyl.) (644cc)		(WME-36, 36A, 37, 37A, 38, 39A, 42, 42A, 63, 64, 65, 66, 67)		REC1395-8112231	REC1395-9595-1	REC1395-9594	
40 (2-cyl.) (644cc)	1994-98	0G053314+	REC21-42990A10				
40 (3-cyl.)		(WME-53, 68, 69)		REC1395-8112231	REC1395-9595-1	REC1395-9594	
40 (3-cyl.)	1997-98	0G531301+	REC21-42990A10				
40 (3-cyl.)	1997-98	9973100+	REC21-42990A10				

MODELO MODEL MODELLO	AÑO YEAR ANNO	Nº SERIE SERIAL Nº. Nº SERIE	MEMBRANA DIAPHRAGM MEMBRANA	KIT JUNTAS GASKET KIT KIT GUARNIZIONI	KIT AGUJAS INLET NEEDLE KIT AGHI	BOYA FLOAT GALLEGGIANTE	KIT VÁLVULA VALVE KIT VALVOLA CHECK
40 (4-cyl.)		(WMA-4)	REC1395-9024	REC1395-9024	REC1395-9022		
40 (4-cyl.)		(WMA-7B)		REC1395-9651	REC1395-9595-1		
40 (4-cyl.)		(WMA-9, 10, 13)		REC1395-9651	REC1395-9595-1		
40 (4 T / 4 Stroke / 4 Tempi)	1998	0G231123+			REC809570-1	REC809569	
45 (450) (4-cyl.)		KA-17A		REC1395-8112231	REC1399-1473	REC1395-8673	
45 (4-cyl.)		(WMA-4)	REC1395-9024	REC1395-9024	REC1395-9022		
45 (4-cyl.)		(WMA-7B)		REC1395-9651	REC1395-9595-1		
45 (4-cyl.)		(WMA-9, 10, 13)		REC1395-9651	REC1395-9595-1		
45 (4-cyl.)	1987-89	0B110789+	REC21-42990A10				
45 (4-cyl.)	1987-89	9466692+	REC21-42990A10				
45 (4 T / 4 Stroke / 4 Tempi, Nodensee)	1996-98	0G231123+			REC809570-1	REC809569	
45 Jet (3-cyl.)		(WME-57, 78)		REC1395-8112231	REC1395-9595-1	REC1395-9594	
45 Jet	1994-95	6428681-0B122929	REC155278A1				
45 Jet	1994-95	0B122930+	REC21-42990A10				
50 (50, 500) (4-cyl.)	1967-75	2116318-4357639	REC23014A1				
50 (50, 500) (4-cyl.)	1971-75	2863739-8030089	REC23014A1				
50 (50, 500) (4-cyl.)	1971-75	9001581-9107213	REC23014A1				
50 (50, 500) (4-cyl.)	1967-75	2097445-7068997	REC23014A1				
50 (4-cyl.)		(KA-13A, 18A, 19A, 21A, 21B, 21C, 21D, 24A, 26A, 26B, 27A)		REC1395-2015	REC1399-1473	REC1395-8673	
50 (4-cyl.)		(BA-3A, 3B, 3C, 3D, 4A)	REC1399-5137	REC1395-5198	REC1395-9022		
50 (4-cyl.)		(WMA-1, 3)	REC1395-9024	REC1395-9024	REC1395-9022		
50 (4-cyl.)		(WMK-8)		REC1395-48401	REC1395-8318	REC1395-8673	
50 (3-cyl.)		(WM-13, 13A, 15, 15A, 16, 16A, 18)		REC1395-6200	REC19271-1		
50 (3-cyl.)		(WME-22, 22B, 23, 24, 26, 27, 28, 35, 43, 44, 45, 53, 68, 69)		REC1395-8112231	REC1395-9595-1	REC1395-9594	
50 (3-cyl.)	1986-87	6428681-0B122929	REC155278A1				
50 (3-cyl.)	1986-87	9385911-9469199	REC155278A1				
50 (3-cyl.)	1986-87	7208333-0A721307	REC155278A1				
50 (3-cyl.)	1988-90	0B122930+	REC21-42990A10				
50 (3-cyl.)	1988-90	9469200+	REC21-42990A10				
50 (3-cyl.)	1988-90	0A721308+	REC21-42990A10				
50 (3-cyl.)	1998	0G590000 +	REC21-42990A10				
50 (3-cyl.)	1998	9973100+	REC21-42990A10				
50 (4 T / 4 Stroke / 4 Tempi)	1995-98	0G231123+			REC809570-1	REC809569	
55		(WM-13, 13A, 15, 15A, 16, 16A, 18)		REC1395-6200	REC19271-1		
55		(WME-22, 22B, 23, 24, 26, 27, 28, 35, 43, 44, 45, 57, 58)		REC1395-8112231	REC1395-9595-1	REC1395-9594	
55 (3-cyl.)	1996-97	0D000750+	REC21-42990A10				
55 (3-cyl.)	1996-97	9741042+	REC21-42990A10				
60 (600) (6-cyl.)		(KB-3A)		REC1395-2015	REC1399-1473	REC1395-8673	
60 (3-cyl.)		(WM13- 13A, 15, 15A, 16, 16A, 18)		REC1395-6200	REC19271-1		
60 (3-cyl.)		(WME-22, 22B, 23, 24, 26, 27, 28, 35, 43, 44, 45, 57, 58)		REC1395-8112231	REC1395-9595-1	REC1395-9594	
60 (3-cyl.)	1984-87	6428681-0B122929	REC155278A1				
60 (3-cyl.)	1984-87	9385911-9469199	REC155278A1				
60 (3-cyl.)	1984-87	7208333-0A721307	REC155278A1				
60 (3-cyl.)	1988-90	0B122930+	REC155278A1				
60 (3-cyl.)	1988-90	9469200+	REC155278A1				
60 (3-cyl.)	1988-90	0A721308+	REC155278A1				
65 (650) (4-cyl.)		(KC-2A, 5A, 5B, 5C, 11A, 15A)		REC1395-2015	REC1399-1473	REC1395-8673	
65 (650) (4-cyl.)	1967-69	2119749-2803561	REC23014A1				REC21-30430A1
65 (650) (4-cyl.)	1970-71	2803562-3293183	REC56678A1				REC21-30430A4
65 (650) (3-cyl.)		(WMK-5, 12, 13, 20)		REC1395-6200	REC1395-8318	REC1395-8673	
65 (650) (3-cyl.)		(WM-2)		REC1395-6200	REC1395-8318	REC1395-8673	
65 (650) (3-cyl.)		(WM-4)		REC1395-6200	REC1395-8318	REC1395-8673	
65 (650) (3-cyl.)	1972-76	3293184-4571651	REC56678A1				REC21-30430A3
65 (650) (3-cyl.)	1973-83	8006640+	REC56678A1				REC21-30430A3
65 (650) (3-cyl.)	1973-76	9020074-9135824	REC56678A1				REC21-30430A3
65 (650) (3-cyl.)	1973-76	7013633-7087822	REC56678A1				REC21-30430A3
65 Jet (3-cyl.)		(WME-29, 30, 41, 46, 47, 48, 49, 59, 60, 61, 62, 75, 76, 77, 78, 82, 83, 84, 87, 88)		REC1395-8112231	REC1395-9595-1	REC1395-9594	
65 Jet	1994-98	00283222+	REC21-42990A10				
70 (700) (6-cyl.)		(KA-8A, 12A)		REC1395-2015	REC1399-1473	REC1395-8673	
70 (3-cyl.)		(WM-6, 8, 9, 11)		REC1395-6200	REC1395-8318		
70 (3-cyl.)		(WME-1, 1A, 1B, 4, 5, 6, 6A, 7, 7B, 8, 9, 10, 10A, 15, 15A, 17, 18, 19, 25)		REC1395-8112231	REC1395-9595-1	REC1395-9594	
70 (3-cyl.)	1977-83	4571652-6428680	REC55278A4				REC21-13424A1
70 (3-cyl.)	1977-83	8042350+	REC55278A4				REC21-13424A1
70 (3-cyl.)	1977-83	9135825-9385910	REC55278A4				REC21-13424A1
70 (3-cyl.)	1977-83	7087823-7208332	REC55278A4				REC21-13424A1

MODELO MODEL MODELLO	AÑO YEAR ANNO	Nº SERIE SERIAL Nº. Nº SERIE	MEMBRANA DIAPHRAGM MEMBRANA	KIT JUNTAS GASKET KIT KIT GUARNIZIONI	KIT AGUJAS INLET NEEDLE KIT AGHI	BOYA FLOAT GALLEGGIANTE	KIT VÁLVULA VALVE KIT VALVOLA CHECK
70 (3-cyl.)	1987	0A996142+	**REC42909A3**				
70 (3-cyl.)	1987	9483121+	**REC42909A3**				
75 (4-cyl.)		(WM-14, 17)		**REC1395-6200**	**REC19271-1**		
75 (4-cyl.) Bomba triangular Triangular pump Pompa triangolare	1984-88	6432901+	**REC55278A5**				**REC21-30430A13**
75 (4-cyl.) Bomba triangular Triangular pump Pompa triangolare	1984-88	9393856 +	**REC55278A5**				**REC21-30430A13**
75 (4-cyl.) Bomba triangular Triangular pump Pompa triangolare	1984-88	7208573+	**REC55278A5**				**REC21-30430A13**
75 (4-cyl.) Bomba cuadrada Square pump Pompa quadrata	1984-88	6432901+	**REC21-42990A10**				
75 (4-cyl.) Bomba cuadrada Square pump Pompa quadrata	1984-88	9393856+	**REC21-42990A10**				
75 (4-cyl.) Bomba cuadrada Square pump Pompa quadrata	1984-88	7208573 +	**REC21-42990A10**				
75 (3-cyl.)		(WME-1, 1A, 1B, 4, 5, 6, 6A, 7, 7B, 8, 9, 10, 10A, 15, 15A, 17, 18, 19, 25, 29, 30, 31, 41, 46, 47, 48, 49, 59, 60, 61, 62, 75, 76, 77, 78, 82, 83, 84, 87, 88)		**REC1395-8112231**	**REC1395-9595-1**	**REC1395-9594**	
75 (3-cyl.)	1990-98	0C222000+	**REC42909A3**				
75 (3-cyl.)	1990-98	9589039+	**REC42909A3**				
75 (3-cyl.)	1990-98	0C222000+	**REC21-42990A10**				
75 (3-cyl.)	1990-98	9589039+	**REC21-42990A10**				
75 4T	2000+	G960500+		**REC67F-W0093-00**		**REC804184**	
80 (800) (6-cyl.)		KA-10A, 11A, 14A, 16A, KC-3A		**REC1395-2015**	**REC1399-1473**	**REC1395-8673**	
80 (800) (4-cyl.)	1969-72	2559001-2670574	**REC23014A1**				**REC21-30430A1**
80 (800) (4-cyl.)	1969-72	2783253-2856331	**REC56678A1**				**REC21-30430A3**
80 (80, 800) (4-cyl.)		(KD-4A)		**REC1395-48401**	**REC1395-8318**	**REC1395-8673**	
80 (80, 800) (4-cyl.)		(WM-5, 10, 12, 14, 17)		**REC1395-6200**	**REC1395-8318**		
80 (80, 800) (4-cyl.)	1978-83	4831999-6432900	**REC55278A5**				**REC21-30430A13**
80 (80, 800) (4-cyl.)	1978-83	8050200+	**REC55278A5**				**REC21-30430A13**
80 (80, 800) (4-cyl.)	1978-83	9177626-9393855	**REC55278A5**				**REC21-30430A13**
80 (80, 800) (4-cyl.)	1978-83	7110998-7208572	**REC55278A5**				**REC21-30430A13**
80 (3-cyl.)		(WME-1, 1A, 1B, 4, 5, 6, 6A, 7, 7B, 8, 9, 10, 10A, 15, 15A, 17, 18, 19, 25)		**REC1395-8112231**	**REC1395-9595-1**	**REC1395-9594**	
80 (3-cyl.)	1987	0A996142+	**REC42909A3**				
80 (3-cyl.)	1987	9483121+	**REC42909A3**				
80 Jet (4-cyl.)	1994-98	(WME-32, 32A, 50, 79)		**REC1395-8112231**	**REC1395-9595-1**	**REC1395-9594**	
80 Jet	1994-98	0D283222+	**REC21-42990A10**				
85 (850) (6-cyl.)		(KA-10A, 11A, 14A, 16A, KC-3A)		**REC1395-2015**	**REC1399-1473**	**REC1395-8673**	
85 (850) (4-cyl.)		(WM-3, 5)		**REC1395-6200**	**REC1395-8318**		
85 (850) (4-cyl.)		(WMK-4, 16, 17)		**REC1395-48401**	**REC1395-8318**	**REC1395-8673**	
85 (850) (4-cyl.)	1973-77	3493913-4831998	**REC55278A5**				**REC21-30430A13**
85 (850) (4-cyl.)	1973-77	8005440-8050199	**REC55278A5**				**REC21-30430A13**
85 (850) (4-cyl.)	1973-77	9011604-9177625	**REC55278A5**				**REC21-30430A13**
85 (850) (4-cyl.)	1973-77	7010108-7110997	**REC55278A5**				**REC21-30430A13**
90 (900) (6-cyl.)		(KC-6A)		**REC1395-2015**	**REC1399-1473**	**REC1395-8673**	
90 (90, 900) (6-cyl.)		(WMK-23, 27, 30, 35, 39)		**REC1395-48401**	**REC1395-8318**	**REC1395-8673**	
90 (90, 900) (6-cyl.)	1978-79	4845301-5299505	**REC89031A1**				**REC21-30430A13**
90 (90, 900) (6-cyl.)	1978-79	7111698-7123762	**REC89031A1**				**REC21-30430A13**
90 (6-cyl.) Bomba triangular Triangular pump Pompa triangolare	1979-86	5299506+	**REC89031A3**				**REC21-30430A14**
90 (6-cyl.) Bomba triangular Triangular pump Pompa triangolare	1979-83	8060545+	**REC89031A3**				**REC21-30430A14**
90 (6-cyl.) Bomba triangular Triangular pump Pompa triangolare	1979-86	7147088+	**REC89031A3**				**REC21-30430A14**
90 (6-cyl.) Bomba cuadrada Square pump Pompa quadrata	1979-86	5299506+	**REC21-42990A10**				
90 (6-cyl.) Bomba cuadrada Square pump Pompa quadrata	1979-83	8060545+	**REC21-42990A10**				

MODELO MODEL MODELLO	AÑO YEAR ANNO	Nº SERIE SERIAL Nº. Nº SERIE	MEMBRANA DIAPHRAGM MEMBRANA	KIT JUNTAS GASKET KIT KIT GUARNIZIONI	KIT AGUJAS INLET NEEDLE KIT AGHI	BOYA FLOAT GALLEGGIANTE	KIT VÁLVULA VALVE KIT VALVOLA CHECK
90 (6-cyl.) Bomba cuadrada Square pump Pompa quadrata	1979-86	7147088+	REC21-42990A10				
90 (3-cyl.)		(WME-1, 1A, 1B, 4, 5, 6, 6A, 7, 7B, 8, 9, 10, 10A, 15, 15A, 17, 18, 19, 25, 29, 30, 31, 41, 46, 47, 48, 49, 59, 60, 61, 62, 75, 76, 77, 78, 82, 83, 84, 87, 88)		REC1395-8112231	REC1395-9595-1	REC1395-9594	
90 (3-cyl.)	1987	0A996142+	REC21-42990A10				
90 (3-cyl.)	1987	9483121+	REC21-42990A10				
90 (3-cyl.)	1987	0A996142+	REC42909A3				
90 (3-cyl.)	1987	9483121+	REC42909A3				
90 (4 T / 4 Stroke / 4 Tempi)	2000+	G960500+		REC67F-W0093-00		REC804184	
95 (950) (6-cyl.)		(KC-6A)		REC1395-2015	REC1399-1473	REC1395-8673	
95 (950) (6-cyl.)	1966-67	1869776-2318585	REC23014A1				REC21-30430A1
100 (1000) (6-cyl.)		(KC-1A, 7A, 7B, 10A, 14A)		REC1395-2015	REC1399-1473	REC1395-8673	
100 (1000) (6-cyl.)		(KD-1A, 1B, 2A, 3A)		REC1395-48401	REC1395-8318	REC1395-8673	
100 (1000SS/BP) (6-cyl.)	1968-69	2318586-3253111	REC23014A1				REC21-30430A1
100 (4-cyl.)		(WME-11, 14, 20, 20A, 21, 21A, 32, 32A, 50, 79)		REC1395-8112231	REC1395-9595-1	REC1395-9594	
100 (4-cyl.)	1988-93	0B209468-0D283221	REC42909A3				
100 (4-cyl.)	1988-93	9523034-9793576	REC42909A3				
100 (4-cyl.)	1988-93	0B209468-0D283221	REC21-42990A10				
100 (4-cyl.)	1988-93	9523034-9793576	REC21-42990A10				
100 (4-cyl.)	1994-98	0D283222+	REC21-42990A10				
100 (4-cyl.)	1994-98	9793577+	REC21-42990A10				
110 (1100) (6-cyl.)		(KC-1A, 7A, 7B, 10A, 14A)		REC1395-2015	REC1399-1473	REC1395-8673	
110 (1100) (6-cyl.)	1966-67	1870204-2314955	REC23014A1				REC21-30430A1
115 (1150) (6-cyl.)	1970-77	2836019-4855152	REC155278A1	REC21-30430A3			
115 (1150) (6-cyl.)	1973-77	8008665-8051949	REC155278A1	REC21-30430A3			
115 (1150) (6-cyl.)	1973-77	7010763-7112248	REC155278A1	REC21-30430A3			
115 (115, 1150) (6-cyl.)		(KD-6A, 6B)		REC1395-48401	REC1395-8318	REC1395-8673	
115 (115, 1150) (6-cyl.)		(WMK-3, 10, 15, 18, 26, 28, 32, 36, 40, 41)		REC1395-48401	REC1395-8318	REC1395-8673	
115 (115, 1150) (6-cyl.)	1978-79	4855153-5314655	REC89031A1	REC21-30430A7			
115 (115, 1150) (6-cyl.)	1978-79	8051950-8061119	REC89031A1	REC21-30430A7			
115 (115, 1150) (6-cyl.)	1978-79	7112248-7131212	REC89031A1	REC21-30430A7			
115 Bomba triangular Triangular pump Pompa triangolare	1979-88	5314656+	REC89031A3				REC21-30430A14
115 Bomba triangular Triangular pump Pompa triangolare	1979-83	8061120+	REC89031A3				REC21-30430A14
115 Bomba triangular Triangular pump Pompa triangolare	1979-88	7131213+	REC89031A3				REC21-30430A14
115 Bomba cuadrada Square pump Pompa quadrata	1979-88	5314656+	REC21-42990A10				
115 Bomba cuadrada Square pump Pompa quadrata	1979-83	8061120+	REC21-42990A10				
115 Bomba cuadrada Square pump Pompa quadrata	1979-88	7131213+	REC21-42990A10				
115 (4-cyl.)		(WME-11, 14, 20, 20A, 21, 21A, 33, 40, 40A)		REC1395-8112231	REC1395-9595-1	REC1395-9594	
115 (4-cyl.)	1989-93	0C100000-0D283221	REC42909A3				
115 (4-cyl.)	1989-93	9559771-9793576	REC42909A3				
115 (4-cyl.)	1989-93	0C100000-0D283221	REC21-42990A10				
115 (4-cyl.)	1989-93	9559771-9793576	REC21-42990A10				
115 (4-cyl.)	1994-98	0D283222+	REC21-42990A10				
115 (4-cyl.)	1994-98	9793577+	REC21-42990A10				
125 (1250) (6-cyl.)		(KD-1A, 1B, 2A, 3A)		REC1395-48401	REC1395-8318	REC1395-8673	
125 (1250) (6-cyl.)	1968-69	2314956-2839368	REC23014A1				REC21-30430A1
125 (1250BP) (6-cyl.)	1968	2400058-2641954	REC23014A1				REC21-30430A1
125 (4-cyl.)		(WME-34, 52, 81)		REC1395-8112231	REC1395-9595-1	REC1395-9594	
125 (4-cyl.)	1994-98	0D283222+	REC21-42990A10				
135 (1350) (6-cyl.)		(KD-7A, 7B)		REC1395-48401	REC1395-8318	REC1395-8673	
135 (1350) (6-cyl.)		(WMK-4)		REC1395-48401	REC1395-8318	REC1395-8673	
135 (1350) (6-cyl.)	1969	2839369-3293233	REC155278A1				REC21-30430A3
140 (1400) (6-cyl.)	1970-71	3293234-3502805	REC155278A1				REC21-30430A3
140 (140, 1400) (6-cyl.)		(WMK-7, 9, 25, 29)		REC1395-48401	REC1395-8318	REC1395-8673	
140 (140, 1400) (6-cyl.)	1978-79	4865678-5327662	REC89031A1				REC21-30430A7
140 (140, 1400) (6-cyl.)	1978-79	8052650-8052879	REC89031A1				REC21-30430A7

MODELO MODEL MODELLO	AÑO YEAR ANNO	Nº SERIE SERIAL Nº. Nº SERIE	MEMBRANA DIAPHRAGM MEMBRANA	KIT JUNTAS GASKET KIT KIT GUARNIZIONI	KIT AGUJAS INLET NEEDLE KIT AGHI	BOYA FLOAT GALLEGGIANTE	KIT VÁLVULA VALVE KIT VALVOLA CHECK
140 (140, 1400) (6-cyl.)	1978-79	7112773-7132512	REC89031A1				REC21-30430A7
140 (6-cyl.)	1980-81	5327663+	REC89031A3				REC21-30430A14
140 (6-cyl.)	1981	8066065+	REC89031A3				REC21-30430A14
140 (6-cyl.)	1980-81	7112773-7132512	REC89031A3				REC21-30430A14
150 (1500) (6-cyl.)		(WMK-7, 9, 25, 29)		REC1395-48401	REC1395-8318	REC1395-8673	
150 (1500) (6-cyl.)	1973-77	4865678-5327662	REC155278A1				REC21-30430A3
150 (1500) (6-cyl.)	1973-77	8052650-8052879	REC155278A1				REC21-30430A3
150 (1500) (6-cyl.)	1973-77	7112773-7132512	REC155278A1				REC21-30430A3
150 (1500XS) (6-cyl.)	1978	5327663+	REC89031A2				
V-105 Jet	1994-95	0D08200-0G303045 (WMH-13, 23, 31)		REC8107492	REC1395-811690-1		
V-105 Jet	1996+	0G303046+ (WMV-2, 2A)		REC8107492	REC1395-811690-1		
V-135 Bomba triangular Triangular pump Pompa triangolare	1986-88	0A904646-0C100860 (WH-33, 40)	REC89031A2	REC1395-6452	REC1395-7824	REC1395-7623	
V-135 Bomba cuadrada Square pump Pompa quadrata	1986-88	0A904646-0C100860 (WH-32, 35, 38)	REC21-42990A10	REC1395-6452	REC1395-7824	REC1395-7623	
V-135 Bomba triangular Triangular pump Pompa triangolare	1989-90	0C100861-0C239552 (WH-35, 38)	REC89031A2	REC1395-6452	REC1395-7824	REC1395-7623	
V-135 Bomba cuadrada Square pump Pompa quadrata	1989-90	0C100861-0C239552 (WH-40, 48)	REC21-42990A10	REC1395-6452	REC1395-7824	REC1395-7623	
V-135	1991	0C239553-0D081999 (WMH-8, 8A)	REC89031A2	REC8107492	REC1395-7824		
V-135 Bomba triangular Triangular pump Pompa triangolare	1992-95	0D082000-0G303045 (WMH-12A, 12B)	REC89031A2	REC8107492	REC1395-7824		
V-135 Bomba cuadrada Square pump Pompa quadrata	1992-95	0D082000-0G303045 (WMH-28, 30)	REC21-42990A10	REC8107492	REC1395-7824		
V-135	1996-98	0G303046-0G760299 (WMV-1, 1A)	REC89031A2	REC8107493	REC1395-7824		
V-135		0G760300+ (WMV-1A)	REC89031A2	REC8107493	REC1395-7824		
V-135		(WMH 21, 22, 23, 24, 25, 28)		REC1395-811691-2			
V-135 DFI	1998	0G590000+	REC21-42990A10				
V-140 Jet	1994-95	0G82000-0G303045 (WMH-16, 21, 34, 39)		REC8107492	REC1395-811690-1		
V-140 Jet	1996-98	0G303046-0G760299 (WMV-5, 5A)		REC8107493	REC1395-811690-1		
V-140 Jet	1996-98	0G760300+ (WMV-5A)		REC8107493	REC1395-811690-1		
V-150 (1500) Bomba triangular Triangular pump Pompa triangolare	1978-85	4868998+	REC89031A2				
V-150 (1500) Bomba cuadrada Square pump Pompa quadrata	1978-85	4868998+	REC21-42990A10				
V-150 (150, 1500)	1978-98	(WH-9)		REC1395-6452		REC1395-7623	
V-150 (150, 1500)	1978-98	(WH-12)		REC1395-6452	REC1395-7824	REC1395-7623	
V-150 (150, 1500)	1978-98	(WH-29)		REC1395-6452	REC1395-7824	REC1395-7623	
V-150	1986-88	0A904646-0C239552 (WH-35, 38, 40, 48)		REC1395-6452	REC1395-7824	REC1395-7623	
V-150	1991	0C239553-0D081999 (WMH-1, 7)		REC8107492	REC1395-811690-1		
V-150	1992-95	0D08200-0G303045 (WMH-13, 13B, 23, 31)		REC8107492	REC1395-811690-1		
V-150	1996-98	0G303046-0G760299 (WMV-2, 2A)		REC8107492	REC1395-811690-1		
V-150		0G760300+ (WMV-3A)		REC8107492	REC1395-811690-1		
V-150 DFI	1998	0G590000+	REC21-42990A10				
V-150 EFI	1993-98		REC21-42990A10				
V-150 (XR4, MAGII)	1988	0B242885-0C100860 (WH-41A)	REC21-42990A10	REC1395-6452	REC1395-7824	REC1395-7623	
V-150 (XR4, MAGII)	1989	0C100861-0C239552 (WH-41, 41A)	REC21-42990A10	REC1395-6452	REC1395-7824	REC1395-7623	
V-150 (XR4, MAGII)	1991	0C239553-0D081999 (WMH-6)	REC21-42990A10	REC8107492	REC1395-811690-1		
V-150 (XR4, MAGII)	1992-95	0D082000-0G303045 (WMH-14A, 25, 32A)	REC21-42990A10	REC8107492	REC1395-811690-1		
V-150 (XR4, MAGII)	1996-98	0G303046-0G760299 (WMV-3, 3A)	REC21-42990A10	REC8107492	REC1395-811690-1		
V-150 (XR4, MAGII)	1996-98	0G762000+ (WMV-3A)	REC21-42990A10	REC8107492	REC1395-811690-1		
V-150		(WMH 21, 22, 23, 24, 25, 28)		REC1395-811691-2			
V-175 Bomba triangular Triangular pump Pompa triangolare	1976-88	4301235-0C100860 (WH-13)	REC21-42990A10	REC1395-6452	REC1395-7824	REC1395-7623	
V-175 Bomba triangular Triangular pump Pompa triangolare	1976-79	8058870-8064249 (wh-13)	REC21-42990A10	REC1395-6452	REC1395-7824	REC1395-7623	

MODELO MODEL MODELLO	AÑO YEAR ANNO	Nº SERIE SERIAL Nº. Nº SERIE	MEMBRANA DIAPHRAGM MEMBRANA	KIT JUNTAS GASKET KIT KIT GUARNIZIONI	KIT AGUJAS INLET NEEDLE KIT AGHI	BOYA FLOAT GALLEGGIANTE	KIT VÁLVULA VALVE KIT VALVOLA CHECK
V-175 Bomba cuadrada Square pump Pompa quadrata	1976-88	4301235-0C100860 (WH-1, 4, 7, 28, 39, 46)	REC89031A2	REC1395-6452	REC1395-7824	REC1395-7623	
V-175 Bomba cuadrada Square pump Pompa quadrata	1976-79	8058870-8064249 (WH-13)	REC89031A2	REC1395-6452		REC1395-7623	
V-175 Bomba triangular Triangular pump Pompa triangolare	1976-88	4301235-0C100860 (WH-7A)	REC21-42990A10	REC1395-6452		REC1395-7623	
V-175 Bomba triangular Triangular pump Pompa triangolare	1976-79	8058870-8064249 (WH-7A)	REC21-42990A10	REC1395-6452	REC1395-7824	REC1395-7623	
V-175 Bomba cuadrada Square pump Pompa quadrata	1976-88	4301235-0C100860 (WH-17)	REC89031A2	REC1395-6452	REC1395-7824	REC1395-7623	
V-175 Bomba cuadrada Square pump Pompa quadrata	1976-79	8058870-8064249 (WH-17)	REC89031A2	REC1395-6452	REC1395-7824	REC1395-7623	
V-175 Bomba triangular Triangular pump Pompa triangolare	1976-88	4301235-0C100860 (WH-17R, 30, 34)	REC21-42990A10	REC1395-6452	REC1395-7824	REC1395-7623	
V-175 Bomba triangular Triangular pump Pompa triangolare	1976-79	8058870-8064249 (WH-17R, 30, 34)	REC21-42990A10	REC1395-6452	REC1395-7824	REC1395-7623	
V-175	1989-90	0C100861-0C239552 (WH-34)		REC1395-6452	REC1395-7824	REC1395-7623	
V-175	1991	0C239553-0D81999 (WMH-2, 11)		REC8107492	REC1395-811690-1		
V-175	1992-95	0D082000-0G303045 (WMH-15, 22, 33)		REC8107492	REC1395-811690-1		
V-175	1996-98	0G303046-0G760299 (WMV-4, 4A)		REC8107493	REC1395-811690-1		
V-175	1991	0G760300+ (WMV-4A)		REC8107493	REC1395-811690-1		
V-175	1991	0G760300+		REC1395-6452	REC1395-7824	REC1395-7623	
V-175 EFI	1991-98		REC21-42990A10				
V-175		(WMH 21, 22, 23, 24, 25, 28)		REC1395-811691-2			
V-200 EFI	1989-98		REC21-42990A10				
V-200 (200, 2000)	1978-88	4839034-0C100860 (WH-3)	REC89031A2	REC1395-6452	REC1395-7824		
V-200 (200, 2000)	1980-81	8061595-8065672 (WH-3)	REC89031A2	REC1395-6452	REC1395-7824	REC1395-7623	
V-200 (200, 2000)	1978-88	4839034-0C100860 (WH-3A, 11)	REC89031A2	REC1395-6452		REC1395-7623	
V-200 (200, 2000)	1980-81	8061595-8065672 (WH-3A, 11)	REC89031A2	REC1395-6452		REC1395-7623	
V-200 (200, 2000)	1978-88	4839034-0C100860 (WH-14, 16, 18, 20, 28, 39, 46)	REC89031A2	REC1395-6452	REC1395-7824	REC1395-7623	
V-200 (200, 2000)	1980-81	8061595-8065672 (WH--14, 16, 18, 20, 28, 39, 46)	REC89031A2	REC1395-6452	REC1395-7824	REC1395-7623	
V-200	1989-90	0C100861-0C291519 (WH-46)		REC1395-6452	REC1395-7824	REC1395-7623	
V-200	1991	0C291520-0D081999 (WMH-3)		REC8107492	REC1395-811690-1		
V-200	1992-95	0D082000-0G303045 (WMH-16, 21, 34, 39)		REC8107492	REC1395-811690-1		
V-200	1996-98	0G303046-0G760299 (WMV.5, 5A)		REC8107493	REC1395-811690-1		
V-200	1996-98	0G760300+ (WMV-5A)		REC8107493	REC1395-811690-1		
V-200	1982-83	6073192-6357229	REC90363A1				
V-200	1983-84	6357230-6625220	REC89031A4				
V-200	1985-88	6625221+	REC21-42990A10				
V-200		(WMH 21, 22, 23, 24, 25, 28)		REC1395-811691-2			
V-200 DFI	1998	0G590000+	REC21-42990A10				
V-220 Laser	1987-88	0B117316+	REC21-42990A10				
V-225 (2.4L)	1980-81	5628028 + (WH-5, 20)	REC90363A1	REC1395-6452	REC1395-7824	REC1395-7623	
V-225 (3.0L)	1994-98	0D280813-0G303045 (WMH-19, 46, 47)	REC21-42990A10	REC8107492	REC1395-811690-1		
V-225 (3.0L)	1994-98	0G303046-0G760299(WMV-7, 13)	REC21-42990A10	REC8107493	REC1395-811690-1		
V-225 (3.0L)	1994-98	0G76300+ (WMV-13)	REC21-42990A10	REC8107493	REC1395-811690-1		
V-225 (3.0L)	1994-98	0G245605-0G303045 (WMH-45)	REC21-42990A10	REC8107493	REC1395-811690-1		
V-225 (3.0L)	1994-98	0G303046-0G760299 (WMH-6, 11)	REC21-42990A10	REC8107493	REC1395-811690-1		
V-225 (3.0L)	1994-98	ALL (WMV-11)	REC21-42990A10	REC8107493	REC1395-811690-1		
V-225 (3.0L)	1994-98	0G760300+ (WMV-11A)	REC21-42990A10	REC8107493	REC1395-811690-1		
V-250 (275) (3.4L)	1989-94	0C101891+ (WD-8A, 9, 9A)	REC21-42990A10				
V-225 DFI (3.0L)	1998	0G590000+	REC21-42990A10				
V-225 EFI (3.0L)	1995-98	0G129222+	REC21-42990A10				
V-250 EFI (3.0L)	1995-98	0G129222+	REC21-42990A10				
V-275 (3.4L)	1989-94	0C101891+	REC21-42990A10				
V-300 (3.4L)	1980-87	5611648+ (WD-3, 5)	REC89031A2				

TERMOSTATO
THERMOSTAT
TERMOSTATO

Ref.	R.O.	°C	°F
REC14586	14586	48.8	120



Ref.	R.O.	°C	°F
REC6F5-12411-03	75692	61,6	143
	814554T01		



Ref.	R.O.	°C	°F
REC850055001	850055	43,3	110
	8500550014		



Ref.	R.O.	°C	°F
REC895338	F97068-2	54,4	130
	895338		



Ref.	R.O.	°C	°F
REC8M0067307	885599004	54,4	130



Ref.	R.O.	°C	°F
REC833072003	833072003	61,6	143



Ref.	R.O.	°C	°F
REC67F-12411-01	855676004		

MOTORES / ENGINES / MOTORI
75 EFI, 80 EFI, 90 EFI, 100 EFI
(4T / 4 Strokes / 4 Tempi)



Ref.	R.O.	°C	°F
REC833072004	833072004	61,6	143



Ref.	R.O.	°C	°F
REC6E5-12411-02	11919M		



Ref.	R.O.	°C	°F
RM804540	804540	52	126

MOTORES / ENGINES / MOTORI
2.5, 4, 5, 6 HP (4T / 4 Strokes / 4 Tempi)



Ref.	R.O.	°C	°F
RM855676005	855676005	71	160

MOTORES / ENGINES / MOTORI
8, 9.9 HP (4T / 4 Strokes / 4 Tempi)



Ref.	R.O.	°C	°F
RM855676002	855676002	60	140
REC855676002			

MOTORES / ENGINES / MOTORI
8 (209cc)
15 (2 cyl), 20, 25 HP
(4T / 4 Strokes / 4 Tempi)



Ref.	R.O.	°C	°F
REC825212T02	855676003	60	140
	855676003		
	855676A1		

MOTORES / ENGINES / MOTORI
13.5, 15, 25, 30, 40, 45, 50 HP
(4T / 4 Strokes / 4 Tempi)





Ref.	R.O.	°C	°F
RM880640508	880640508		

MOTORES / ENGINES / MOTORI
Verado



GUÍA TERMOSTATO
THERMOSTAT GUIDE
GUIDE TERMOSTATO

4 TIEMPOS / STROKES

HP	SERIE / SERIAL / SERIE	TERMOSTATO / THERMOSTAT / TERMOSTATO
2HP, 2.5HP (Carb)	0R131842 +	**RM804540**
3.5HP (Carb)	0R131842 +	**RM804540**
4HP, 5HP, 6HP	0P073456 +	**RM804540**
8HP (209 cc)	0P325500 +	**RM855676002**
8HP (Bodensee)	0P086824 - 0P400999	**REC825212T02**
9.9HP (209 cc)	0P325500 +	**RM855676002**
9.9HP (323 cc)	0P075166 - 0P400999	**REC825212T02**
13.5 (International)	0P134638 +	**REC825212T02**
15HP	0P9973100 +	**REC825212T02**
15HP (Carb) (2 Cyl)	0R235949 +	**RM855676002**
15HP (SEAPRO)	0R123565 +	**RM855676002**
20HP (Carb) (2 Cyl)	0R235168 +	**RM855676002**
25HP	0P9973100 +	**REC825212T02**
25HP (SEAPRO) (EFI)	0R051710 +	**RM855676002**
30HP	0P017000 +	**REC825212T02**
30HP (Carb) (3 Cyl) (EFI)	0P153500 - 0P400999	**REC825212T02**
40HP	994408 +	**REC825212T02**
40HP (Carb) (3 Cyl)	0P153500 - 0P400999	**REC825212T02**
40HP (4Cyl)	0P094500 - 0P206999	**REC14586**
40HP (EFI) (3 Cyl)	0P401000 - 0P400999	**REC825212T02**
40HP (EFI) (4 Cyl)	0P401000 +	**REC14586**
40HP ITALY	0P017000 - 0P094499	**REC825212T02**
45HP Bodensee	9944807 +	**REC825212T02**
50HP (BIGFOOT)	9944807 +	**REC825212T02**
50HP (EFI)	0P153500 +	**REC14586**
50HP (4 Cyl)	0P94500 - 0P206999	**REC14586**
60HP (4 Cyl)	0P94500 - 0P206999	**REC14586**
60HP (EFI) (4 Cyl)	0P153500 +	**REC14586**
75HP (EFI) (Bodensee)	0G960500 - 0T800999	**REC825212T02**
90HP (EFI)	0G960500 - 0T800999	**REC825212T02**
100HP (EFI)	1B227077 - 1B366822	**REC67F-12411-01**
135HP (VERADO)	0P419487 +	**RM880640508**
150HP (VERADO)	0P419487 +	**RM880640508**
175HP (VERADO)	0P419487 +	**RM880640508**
200HP (VERADO) 4 Cyl	0P514869 +	**RM880640508**
200HP (VERADO) 4 Cyl	0P514869 +	**RM880640508**
200HP (VERADO) 6 Cyl	0P409357 +	**RM880640508**
225HP (VERADO) 6 Cyl	0P409357 +	**RM880640508**
250HP (VERADO) 6 Cyl	0P409357 +	**RM880640508**
275HP (VERADO) 6 Cyl	0P464488 +	**RM880640508**
300HP (VERADO) 6 Cyl	0P520553 +	**RM880640508**
350HP (VERADO) 6 Cyl	2B141617+	**RM880640508**
400HP (VERADO) 6 Cyl	2B141124+	**RM880640508**

CUERPO TERMOSTATO
THERMOSTAT HOUSING
CORPO TERMOSTATO

Ref.	R.O.
REC892864T04	892864T04

MOTORES / ENGINES / MOTORI

135 - 400 Verado (Todas / All / Tutti)



KITS TERMOSTATO
THERMOSTAT KITS
KIT TERMOSTATO

Ref.	R.O.
REC14586A3	14586A3



GUÍA TERMOSTATO
THERMOSTAT GUIDE
GUIDE TERMOSTATO

2 TIEMPOS / STROKES

HP	SERIE / SERIAL / SERIE	KIT TERMOSTATO / THERMOSTAT KIT / KIT TERMOSTATO	TERMOSTATO / THERMOSTAT / TERMOSTATO
4A/ 5C/ 6C-D	Todas / All / Tutti		**REC6E5-12411-02**
6HP	9461526 +	**REC14586A3**	**REC14586**
8HP (C/K) W8 (Todas / All / Tutti)			**REC6E5-12411-02**
8HP	9461526 +	**REC14586A3**	**REC14586**
9.9HP	9461526 +	**REC14586A3**	**REC14586**
15HP	9542620 +	**REC14586A3**	**REC14586**
15 Sea Pro	9927000 +	**REC14586A3**	**REC14586**
Super 15	9507381 +	**REC14586A3**	**REC14586**
20HP	9467988 +	**REC14586A3**	**REC14586**
25HP (2Cyl)	9467988 +	**REC14586A3**	**REC14586**
25 Sea Pro	9507381 +	**REC14586A3**	**REC14586**
30HP (2Cyl)	9855139 +	**REC14586A7**	**REC895338**
35HP	9384476 +	**REC75692A6**	**REC6F5-12411-03**
40HP (2Cyl)	9855139 +	**REC14586A7**	**REC895338**
40HP (3Cyl)	9973100 +	**REC850055A2**	**REC850055001**
50HP (3Cyl)	9482600 - 9671686	**REC75692A7**	**REC6F5-12411-03**
50HP (3Cyl)	9682500 - 9740999		**REC14586**
50HP (3Cyl)	9741000 - 9973099		**REC14586**
50HP (3Cyl)	9973100 +	**REC850055A2**	**REC850055001**
55HP (3Cyl)	9682500 - 9740999		**REC14586**
55HP (3Cyl)	9741000 - 9973099		**REC14586**
55HP (3Cyl)	9973100 +	**REC850055A2**	**REC850055001**
60HP (3Cyl)	9482600 - 9671686	**REC75692A7**	**REC6F5-12411-03**
60HP (3Cyl)	9682500 - 9740999		**REC14586**
60HP (3Cyl)	9741000 - 9973099		**REC14586**
60HP (3Cyl)	9973100 +	**REC850055A2**	**REC850055001**
70HP (3Cyl)	9483121 +	**REC803061T1**	**REC14586**
75HP (3Cyl)	9589039 +	**REC803061T1**	**REC14586**
80HP (3Cyl)	9483121 +	**REC803061T1**	**REC14586**
90HP (3Cyl)	9483121 +	**REC803061T1**	**REC14586**
100HP (4Cyl)	9523034 +	**REC803061T1**	**REC14586**
115HP (4Cyl)	9559771 +	**REC803061T1**	**REC14586**
125HP (4Cyl)	9793577 +	**REC803061T1**	**REC14586**
V-135	0A904646 +		**REC6F5-12411-03**
V-150	0A904646 +	**REC75692Q2**	**REC6F5-12411-03**
XR-4	0C239553 - 0D081999	**REC75692Q2**	**REC6F5-12411-03**
Magnum II	0C239553 - 0D081999	**REC75692Q2**	**REC6F5-12411-03**
XR-6	0D082000 +	**REC75692Q2**	**REC6F5-12411-03**
Magnum III	0D082000 +	**REC75692Q2**	**REC6F5-12411-03**
V-175	0C100861 +	**REC75692Q2**	**REC6F5-12411-03**
V-200	6435503 +	**REC75692Q2**	**REC6F5-12411-03**

Ref.	R.O.
REC850055A2	850055A2



Ref.	R.O.
REC75692A7	75692A7

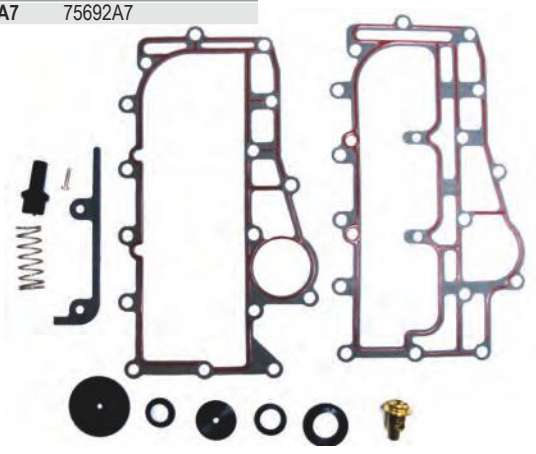

Ref.	R.O.
REC803061T1	803061T1



Ref.	R.O.
REC14586A7	14586A7



Ref.	R.O.
REC75692Q2	75692Q2



Ref.	R.O.
REC75692A6	75692A6



JUNTAS TERMOSTATO
THERMOSTAT GASKET
GUARNIZIONI TERMOSTATO

Ref.	R.O.
REC6E9-12414-A1	27-83336M

MOTORES / ENGINES / MOTORI
MARINER (sólo / only / solo)
40 A/B (K40)



Ref.	R.O.
REC27-62386001	27-62386

Para termostatos de Ø 1".
For thermostat Ø 1".
Per termostato Ø 1".



Ref.	R.O.
PAF8-05010005	27-853702005

MOTORES / ENGINES / MOTORI
4 - 25 HP
(4T / 4 Strokes / 4 Tempi)



Ref.	R.O.
REC27-19205002	27-19205-1

MOTORES / ENGINES / MOTORI
6, 8, 9.9, 10, 15 HP



Ref.	R.O.
REC27-78690002	27-78690, 27-78690002

MOTORES / ENGINES / MOTORI
V6



Ref.	R.O.
PAF15-07010022	27-824853

MOTORES / ENGINES / MOTORI
8 Bodensee
9.9
13.5
15
25
30 (Carb) (EFI)
40 (Carb) (EFI) Italy
45 Bodensee
50 (EFI, Bigfoot)
60 (EFI)



Ref.	R.O.
REC655-12414-A1	27-81031M

MOTORES / ENGINES / MOTORI
8A / 20C / 25C, K / 28 / 30A / W30



Ref.	R.O.
REC682-12414-A1	27-83940M
REC27-83940	27-83940M

MOTORES / ENGINES / MOTORI
9.9C
15C / K
W15



Ref.	R.O.
REC27-14318005	27-14318-3

MOTORES / ENGINES / MOTORI
20 Jet
20, 25 HP (2cyl)



Ref.	R.O.
REC27-66847	27-66847

MOTORES / ENGINES / MOTORI
30, 40 HP (2 cyl)



Ref.	R.O.
REC6E9-12414-A1	27-814555M

MOTORES / ENGINES / MOTORI
40 (Twin Carb) (con inyección de aceite / with oil injection / con iniezione dell'olio)
W40 (w/Marathon)



Ref.	R.O.
REC663-12414-00	27-81266M

MOTORES / ENGINES / MOTORI
MARINER (sólo / only / solo)
48 / W-48
55 / W-55
60 (2 cyl)



Ref.	R.O.
REC27-430068	27-43006-8

MOTORES / ENGINES / MOTORI
65-80 Jet
75-90 HP (3 cyl)
115-125 HP (4-cyl)



JUNTAS TAPA
COVER GASKET
GUARNIZIONI COPPERCHIO

Ref.	R.O.
PAF8-05010004	27-834952001

MOTORES / ENGINES / MOTORI
8, 9.9 HP (209 cc)
(4T / 4 Strokes / 4 Tempi)

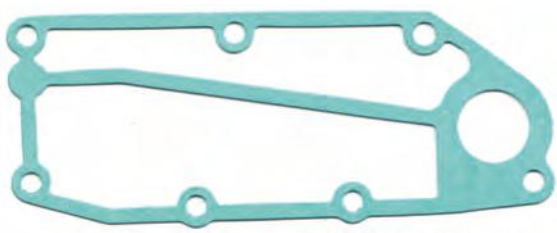

Ref.	R.O.
PAF15-07010018	27-834952

MOTORES / ENGINES / MOTORI
8, 9.9, 13.5, 15 HP
(4T / 4 Strokes / 4 Tempi)

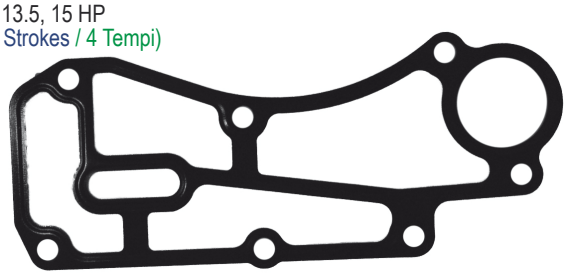

Ref.	R.O.
PAF25-05010111	27-830298

MOTORES / ENGINES / MOTORI
25 HP
(4T / 4 Strokes / 4 Tempi)

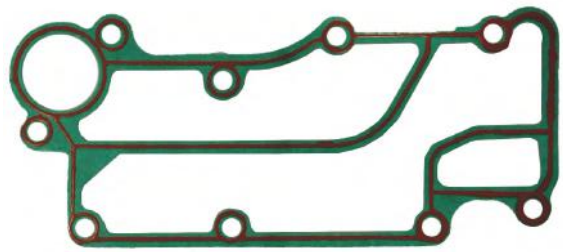

Ref.	R.O.
REC27-8128671	27-812867-1

MOTORES / ENGINES / MOTORI
Para R.O. / For OEM / Per R.O.: 19074

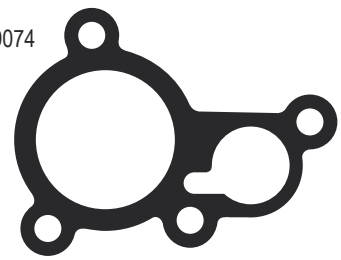

Ref.	R.O.
REC27-827284	27-827284

MOTORES / ENGINES / MOTORI
Para R.O. / For OEM / Per R.O.: GLM13142



Ref.	R.O.
REC27-8128672	27-8128672

MOTORES / ENGINES / MOTORI
Para R.O. / For OEM / Per R.O.: 19074-1



COMPONENTES CUERPO TERMOSTATO
THERMOSTAT HOUSING COMPONENTS
COMPONENTI CORPO TERMOSTATO

CONECTOR CULATA ESTRIBOR
FITTING STB
RACCORDO TESTATA TRIBORDO

Ref.	R.O.
REC22-687271	22-687271



CONECTOR CULATA BABOR
FITTING PORT
RACCORDO TESTATA BABORDO

Ref.	R.O.
REC22-68728	22-68728



MUELLES
SPRINGS
MOLLA

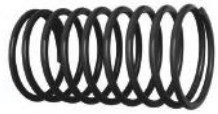

Ref.	R.O.	Motores / Engines / Motori
REC24-64878	24-64878	135-200 HP V6
REC24-47968	24-47968	30, 35, 40 (400) (402) 2 cyl
REC24-42996	24-42996	70, 75, 80, 90 HP 3 cyl
		V6 (2.5L)
REC24-90392	24-90392	30-60 HP 2 / 3 cyl
		V6 (3.4L)

GRUESO
GROMMET
SPESSORE



Ref.	R.O.
REC25-64872	25-64872

MOTORES / ENGINES / MOTORI
30-125 HP (2, 3, 4 cyl)

VÁLVULA
POPPET
VALVOLA



Ref.	R.O.
REC86596T	86596T

MOTORES / ENGINES / MOTORI
40-90 HP (2, 3 cyl)
135-225 HP V6



Ref.	R.O.
REC8612882-1	8612882-1

MOTORES / ENGINES / MOTORI
30, 40 HP (2 cyl)
50, 55, 60 HP (3 cyl)



Ref.	R.O.
REC14480	14480

MOTORES / ENGINES / MOTORI
V6 (2.5L)

RETÉN
SEAL
TENUTA



Ref.	R.O.
REC25-854639	25-854639

MOTORES / ENGINES / MOTORI
30-60 HP (3 cyl) V6 (3.0L)

DIAFRAGMA
DIAPHRAGM
MEMBRANA



Ref.	R.O.
REC648771	64877-1

MOTORES / ENGINES / MOTORI
3, L4-Cyl & V6 (3.0L)



Ref.	R.O.
REC14479-1	14479-1

MOTORES / ENGINES / MOTORI
V6 (2.5L)



Ref.	R.O.
REC812887002	812887-1

MOTORES / ENGINES / MOTORI
30, 40 HP (2 cyl)
50-90 HP (3 cyl)

TAPA
CUP
COPERCHIO



Ref.	R.O.
REC12-94182	12-94182

MOTORES / ENGINES / MOTORI
30-125 HP (2, 3, 4 cyl)

DEFLECTOR
DEFLECTOR
DEFLECTORE



Ref.	R.O.
REC16496	16496

MOTORES / ENGINES / MOTORI
V6 (2.5L)

DESPLAZABLE
CARRIER
DISTANZIALE TERMOSTATO



Ref.	R.O.
REC65848	65848

MOTORES / ENGINES / MOTORI
30-125 HP (2, 3, 4 cyl)



Ref.	R.O.
REC827365	827365

MOTORES / ENGINES / MOTORI
30 Jet, 40, 45, 50, 55,60 HP (3 cyl)

RACOR PLÁSTICO PARA MANGUERA DE Ø INTERIOR 3/8”
ELBOW FITTING PLASTIC FOR 3/8” INSIDE Ø HOSE
RACCORDO DI PLASTICA PER TUBI DI Ø INTERNO DA 3/8”



Ref.	R.O.
REC331886	22-9964-1

ARANDELA
WASHER
RONDELLA



Ref.	R.O.
REC12-85303	12-85303

MOTORES / ENGINES / MOTORI
L6-cyl
V6 (2.5L)



Ref.	R.O.
REC12-76451	12-76451

MOTORES / ENGINES / MOTORI
V6 (2.5L)
V6 (3.0L)
Plástico / Plastic / Plastica

TORNILLO PARA TODAS LAS VÁLVULAS
SCREW FOR ALL POPPET
VITE PER TUTTE LE VALVOLE



Ref.	R.O.
REC10-69570	10-69570

COLAS GEARCASE PIEDI

COLAS COMPLETAS COMPLETE GEARCASE ASSEMBLY PIEDI COMPLETI

Ref.	R.O.	Cola completa Complete gearcase Piedi completi	Reducción Gear ratio Riduzione
REC1647-9148T84	1647-9148T84	20”	1.87:1
REC1647-9148T85	1647-9148T85	25”	1.87:1
REC1647-9148T81	1647-9148T81	20”	2:1
REC1647-9148T82	1647-9148T82	25”	2:1

MOTORES / ENGINES / MOTORI

2.0 / 2.4 / 2.5 L V6
V115 - V-200 (DFI)
XR-6
110, 140 JET (2.5L)



Ref.	R.O.	Cola completa Complete gearcase Piedi completi	Reducción Gear ratio Riduzione	Estrías eje Splines shaft Scalanature
REC1623-859399T13	1623-859399T13	20”	1.75:1	
REC1623-859399T14	1623-859399T14	25”	1.75:1	
REC1623-822442A19	1623-822442A19	20”	1.64:1	8
REC1623-822442A20	1623-822442A20	25”	1.64:1	8

MOTORES / ENGINES / MOTORI

3.0L
200 - 250 HP
3.0 (EFI, DFI)



Ref.	R.O.	Cola completa Complete gearcase Piedi completi	Reducción Gear ratio Riduzione
REC1667-9011R6	1667-901167, 78		2.07:1
	1667-901110, 11		
	1667-9011G51		
	1667-9011J6		
	1667-9011R6		

MOTORES / ENGINES / MOTORI

100 - 125 HP (4 cyl)
80 Jet

Selector 6 dientes
6 Jaw Tooth
Selettore 6 denti



Ref.	R.O.	Cola completa Complete gearcase Piedi completi	Ø Torpedo	Reducción Gear ratio Riduzione
REC1667-9011G90	1667-9011G90	20”	4.25”/107.95 mm	2.33:1
	1667-9011G70			

MOTORES / ENGINES / MOTORI

40 HP (4 cyl) OP094500 - OP206999
40 EFI (4 cyl) OP153500 - OP515896
50 HP (4 cyl) OP094500 - OP206999
50 EFI (4 cyl) OP153500 - OP515896
60 HP (4 cyl) OP094500 - OP206999
60 EFI (4 cyl) OP153500 - OP515896
BigFoot
(4 Tiempos / 4 Strokes / 4 Tempi)

Ref.	R.O.	Cola completa Complete gearcase Piedi completi	Ø Torpedo	Reducción Gear ratio Riduzione
REC1667-9011J41	1667-9011J41	25”	4.25”/107.95 mm	2.33:1

MOTORES / ENGINES / MOTORI

40 EFI (4 cyl) OP216185+
50 EFI (4 cyl) OP216185+
60 EFI (4 cyl) OP216185+
BigFoot
(4 Tiempos / 4 Strokes / 4 Tempi)

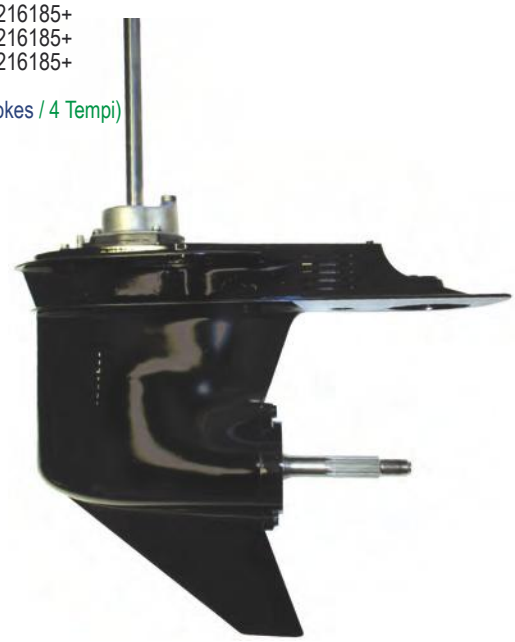

HERRAMIENTAS
TOOLS
ATTREZZI

EXTRACTOR COJINETES Y HÉLICES
PROP AND BEARING PULLER
ESTRATTORE CUSCINETTI E ELICHE

Ref.
REC90095

RECmar®

Extractor de cojinetes y hélices, con patas. Para todos los cojinetes Mercruiser y la mayoría de las hélices.
Prop and bearing carrier puller. Capacity: 5 Tons (Min). For Mercruiser All Style Bearing Carrier and Most Props.
Estrattore cuscinetti e eliche. Per tutti i cuscinetti Mercruiser e la maggior parte delle eliche.





Para hélices y cojinetes antiguos
For prop and old style bearing carrier.
Per eliche e cuscinetti vecchi.



Para cojinetes modernos
For new style bearing carrier.
Per cuscinetti moderni.

EXTRACTOR COJINETES
DRIVER BEARING
ESTRATTORE CUSCINETTI

Ref.	R.O.
REC91-34569A1	91-34569A1



Ref.	R.O.
REC91-36569T	91-36569T



Para desmontar el cojinete de las colas MC-I, R-MR, Alpha One.
Removes pinion bearing from MC-I, R-MR, and Alpha One drive units.
Per rimuovere il cuscinetto dal piede MC-I, R-MR, Alpha One.

EXTRACTOR
PULLER ROD
ESTRATTORE

Ref.	R.O.
REC91-31229	91-31229

RECmar®

Para utilizar con las herramientas REC91-43579 y REC91-36569T para instalar y desmontar el cojinete
Used with REC91-43579 & REC91-36569T tools to install & remove pinion bearing.
Da utilizzare con gli strumenti REC91-43579 e REC91-36569T per installare e smontare il cuscinetto.



EXTRACTOR PIÑONES Y COJINETES
UNIVERSAL PULLER PLATE
ESTRATTORE PIGNONE E CUSCINETTI

Ref.	Capacidad / Capacity / Capacità
REC91-00001	30-50 mm / 1 1/4" ~ 2 1/4"
REC91-00002	50-75 mm / 2 1/4" ~ 3 1/2"
REC91-37241	75-105 mm / 3" ~ 4 1/2"

RECmar®



KIT HERRAMIENTAS COLAS
GEAR CASE TOOL KIT
KIT ATTREZZI PIEDI

Ref.	R.O. / OEM
RM91-31229A7	91-31229A7

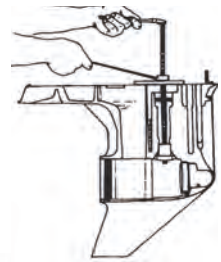

Kit de montaje y desmontaje de los retenes y cojinetes de las colas Alpha, Alpha Gene II y Bravo.
Removes and installs bearings in MC-I, R-MR, Alpha One, Alpha One Gen Two and Bravo.
Kit di montaggio e smontaggio delle guarnizioni di tenuta e dei cuscinetti del piede.



KIT LLAVE HÉLICE
PROP WRENCH KIT
KIT CHIAVE ELICHA

Ref.	RO / OEM	TUERCA / NUT / DADO
REC91-859046Q4	SIERRA 18-4446	1 1/16"
	MERCURY 91-821887T1	
	MCM 91-859046Q4	
	HONDA 89-89206-ZW7-000AH	

Mercury Mariner 75 - 300 HP
Force V4, V6
Mercruiser Alpha / Bravo
Honda BF75-BF130
Suzuki DF60 - DF225 HP
Nissan / Tohatsu 70-140 HP
Yamaha Sterndrives
Yamaha 50-250 HP
OMC Cobra / Volvo SX
Jonhson Evinrude V4 / V6 / V8

RECmar®



LLAVE CABLE CAMBIO
SHIFT CABLE TOOL
CHIAVE PER CAVO CAMBIO

Ref.	R.O. / OEM
REC91-12037	91-12037



Para montaje y desmontaje de los cables de cambio en las colas MC-I,R-MR, Alpha One, Gene II.
Installs and removes drive shaft bearing retainer on MC-1, R-MR, Blackhawk, all Bravo, and all Alpha drive units.
Per il montaggio e lo smontaggio dei cavi di innesto nel piede MC-I, R-MR, Alpha One, Gen II.

LLAVE TUERCA VARILLA CAMBIO
SHIFT SHAFT BUSHING TOOL
CHIAVE DADO LEVA CAMBIO

Ref.	R.O. / OEM
REC91-31107T	91-31107T



Para montaje y desmontaje de las tuercas de la varilla cambio en las colas MC-I, R-MR, Alpha One.
Removes and installs the shift shaft bushing in the gear case of MC-I, R-MR, and Alpha One, drive units.
Per il montaggio e lo smontaggio dei dadi sull'asta cambiare nel piede MC-1, R-MR, Alpha One.

LLAVE TUERCA EJE VERTICAL
PINION NUT ADAPTOR KIT
CHIAVE DADO ASSE VERTICALE

Ref.	R.O. / OEM
REC91-43506T	91-43506T



Para montaje y desmontaje del retenedor y cojinete superior en colas.
Removes and installs threaded bearing retainer on stern drives.
Per il montaggio e lo smontaggio del fermo di ritegno e del cuscinetto superiore dei piedi.

Ref.	R.O. / OEM
REC91-61067A04	91-61067A04



Incluye un adaptador eje. Sostiene la tuerca del piñón cuando se está sacando el piñón y el eje en las colas MC-I, R-MR, Alpha One.
Holds pinion nut when removing pinion gear and drive shaft on MC-I, R-MR, and Alpha One drive units. Comes with drive shaft adaptor.
Include un adattatore albero. Tenendo il dado del pignone quando si rimuove la ruota dentata e l'albero nel piede.

LLAVE ESTRIADO EJE
PROP SHAFT ADAPTOR
CHIAVE ASSE STRIATO

Ref.	R.O. / OEM
REC91-56775T	91-56775T



Da una superficie de llave para girar el eje de la hélice en las colas MC-I, R-MR, TRS, Alpha One y Gene II.
Provides a wrench surface to turn the propeller shaft on MC-I; R-MR; Alpha One; Alpha One, Gen Two; and TRS drive units.
Fornisce una superficie di chiave per ruotare l'asse del propulsore nel piede MCI, R-MR, TRS, Alpha One e Gen II.

Ref.	R.O. / OEM
REC91-61077T	91-61077T



Da una superficie de llave para girar el eje de la hélice en las colas MC-I, R-MR, TRS, Alpha One y Gene II y Bravo I.
Provides a wrench surface to turn the propeller shaft on MC-I; R-MR; Alpha One; Alpha One, Gen Two; Bravo One; and TRS drive units.
Fornisce una superficie di chiave per ruotare l'asse del propulsore nel piede MCI, R-MR, TRS, Alpha One e Gen II, e Bravo I.

LLAVE TUERCA DIÁBOLO
BEARING CARRIER RETAINER WRENCH
CHIAVE PER CUSCINETTO

Ref.	R.O. / OEM
REC91-61069T	91-61069T

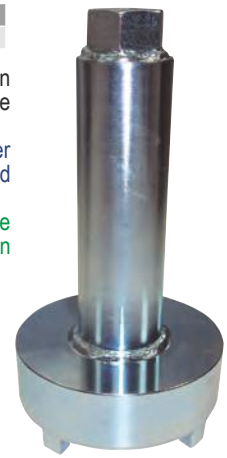

Instala y desinstala las tuercas del diábolo en las colas MC-I, R-MR, TRS, Alpha One y Gene II y Bravo I y II
Removes and installs bearing carrier retainer nuts on Bravo One and Two; MC-I; R-MR; and Alpha One, Gen. Two; and TRS; drive units.
Installa e Disinstalla i dadi di fissaggio dell'asse nel piede MC-I, R-MR, TRS, Alpha One, Gen II, Bravo I, III.

RECmar®

LLAVE GALGADO PIÑONES
PINION GEAR SHIMMING TOOL
CHIAVE PER PIGNONI

Ref.	R.O. / OEM
REC91-56048001	91-56048001
REC91-60523	91-60523
REC91-60526T	91-60526T

Mide la altura del piñón en las colas MC-I, R-MR, Alpha One y Gene II
Measures pinion height of MC-I; R-MR; Alpha One; and Alpha One, Gen Two drive units.
Misurare l'altezza del pignone nel piede MC-I, R-MR, Alpha One e Gen II.



REC91-56048001



REC91-60526T



REC91-60523

DESPIECE COLA
GEARCASE COMPONENTS
ESPLOSO PIEDE

4 TIEMPOS STROKES | 2 TIEMPOS STROKES

4 / 5 HP

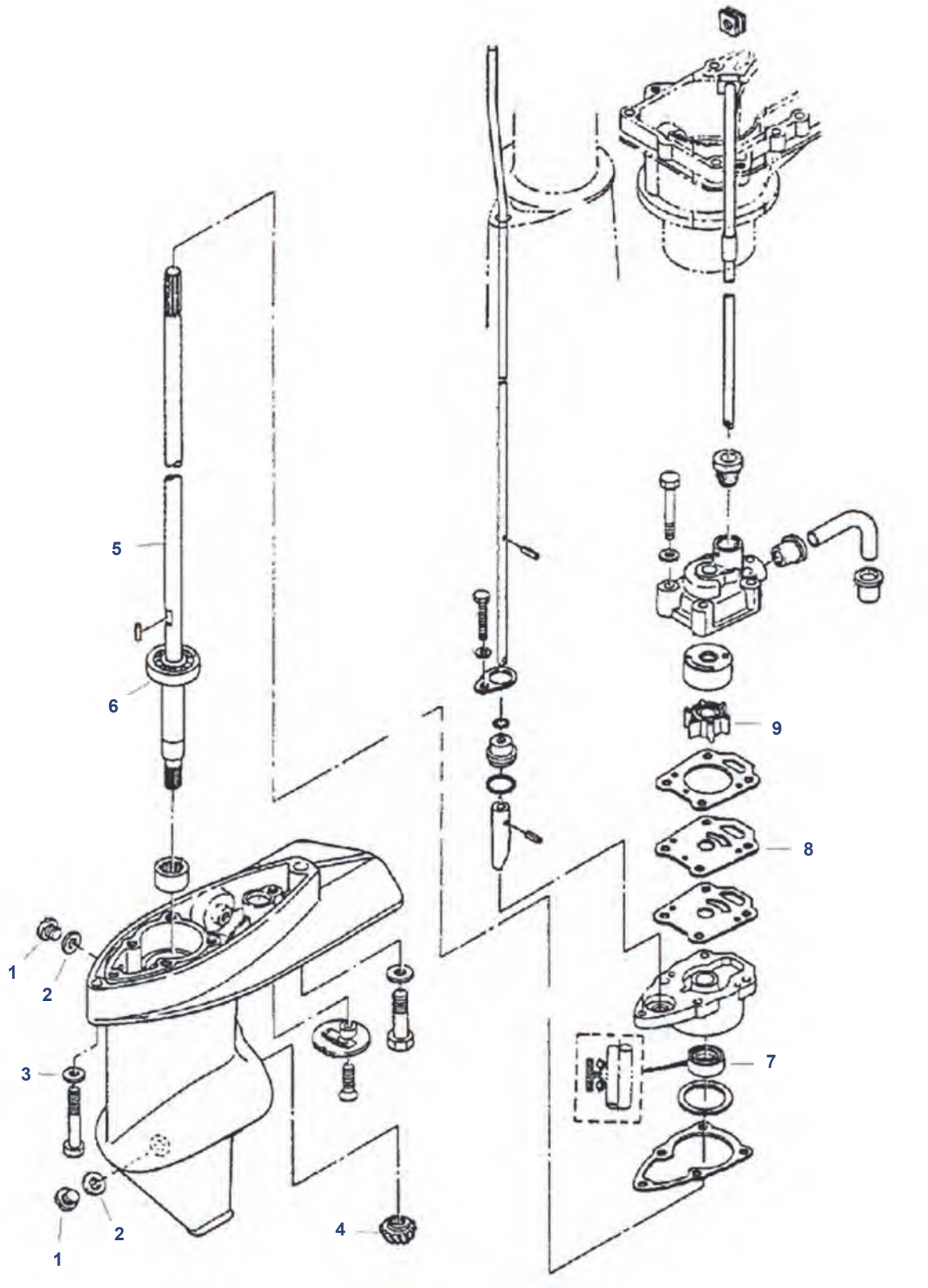

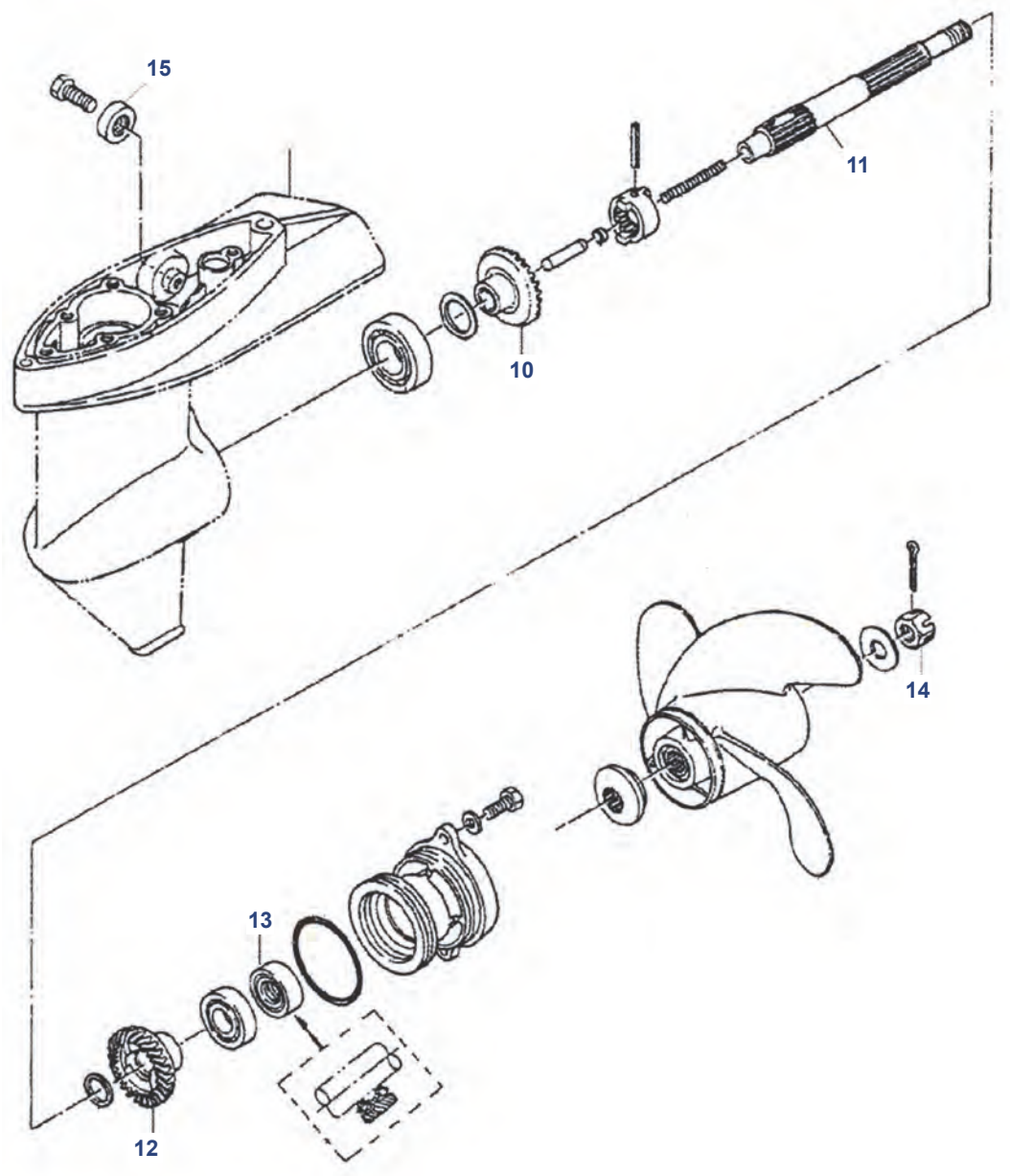

Nº	Ref.	R.O./OEM	Descripción	Description	Descrizione
1	**PAF4-03000023**	22-95368 3	TAPÓN	PLUG	TAPPO
2	**PAF4-03000024**	27-95220	JUNTA	GASKET	GUARNIZIONE
3	**PAGB/T97.1-6**	12-16826	ARANDELA	WASHER	RONDELLA
4	**REC43-16138**	43-16138	PIÑÓN	GEAR	INGRANAGGIO
5	**REC45-161351**	45-16135 1	EJE (S)	DRIVESHAFT (S)	ASSE (S)
5	**REC45-8M0076368**	45-16136 1	EJE (L)	DRIVESHAFT (L)	ASSE (L)
6	**REC30-95347**	30-95347	COJINETE	BEARING	CUSCINETTO
7	**REC26-16162**	26-16162	RETÉN ACEITE	OIL SEAL	PARAOLIO
8	**REC16159**	16159	PLACA	PLATE	PIASTRA
9	**REC47-161543**	47-16154 3	IMPULSOR	IMPELLER	GIRANTE
10	**REC43-812944**	812944	PIÑÓN	GEAR	INGRANAGGIO
11	**REC44-195133**	19513 3	EJE HÉLICE	PROPELLER SHAFT	ASSE GIRANTE
12	**REC43-8129451**	812945 1	PIÑÓN, INVERSO	GEAR, REVERSE	PIGNONE MARCIA INDIETRO
13	**REC26-16130**	16130	RETÉN ACEITE	OIL SEAL	PARAOLIO
14	**REC11-16147Q**	16147	TUERCA HÉLICE	PROP NUT	DADO CHIUSURA ELICA
15	**TEN00823**	823912	ÁNODO REDONDO	ANODE ROUND	ANODO TONDO
15	**CM3H6-60218-000**	875208	ÁNODO CUADRADO	ANODE SQUARE	ANODO

4 STROKES TIEMPOS — 8, 9.9 (209 CC)

2 STROKES TIEMPOS — 6, 8 (2 CYL) (INTER.)
8, 9.8 SEAPRO (2 CYL) (INTER.)

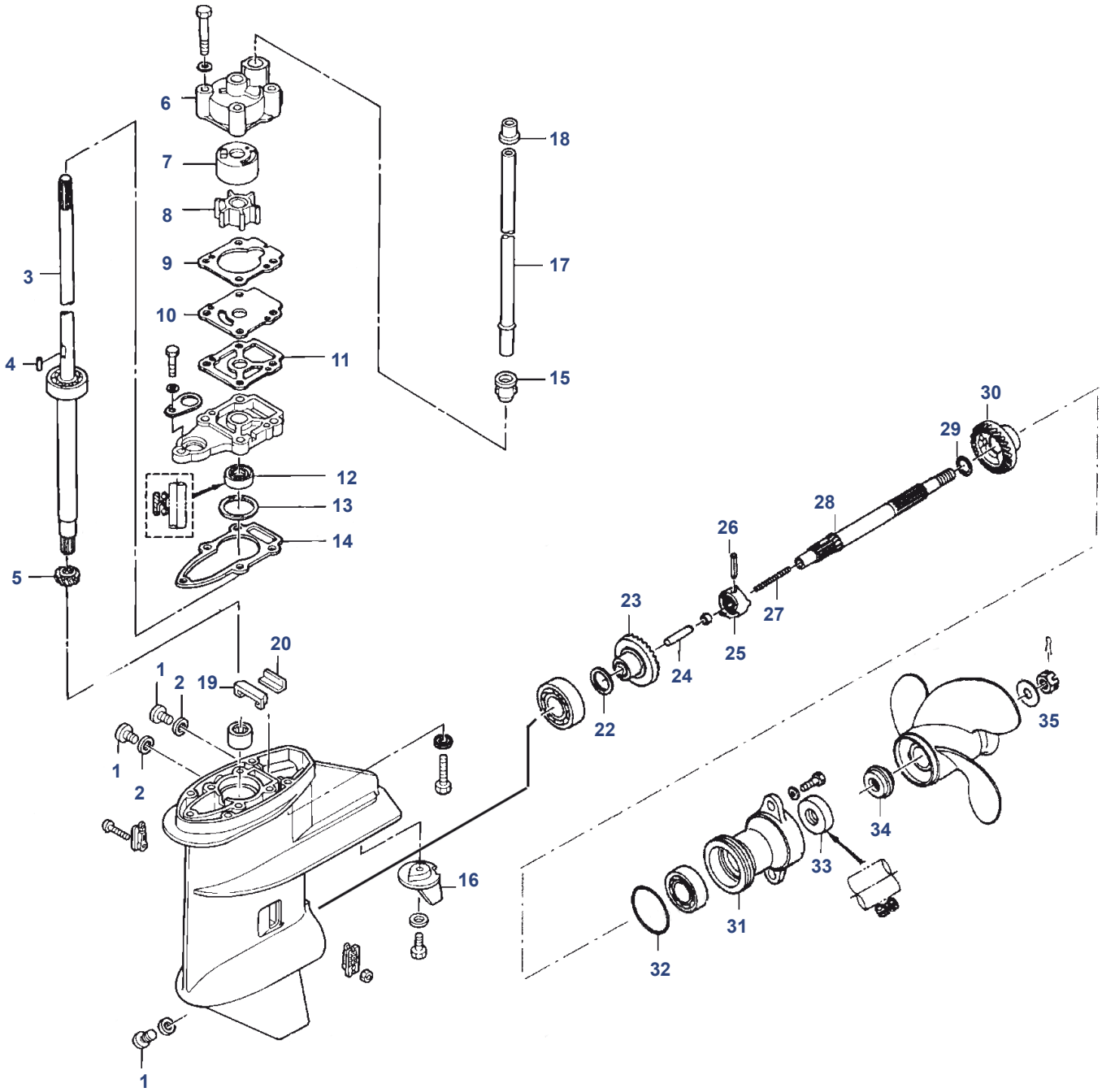

Nº	Ref.	R.O./OEM	Descripción	Description	Descrizione
1	**PAF4-03000023**	95368 3	TAPÓN	PLUG	TAPPO
2	**PAF4-03000024**	95220	JUNTA	GASKET	GUARNIZIONE
3	**PAF8-04020001S**	803738004	EJE COLA (S)	DRIVE SHAFT (S)	ASSE PIEDE (S)
3	**PAF8-04020001L**	803738005	EJE COLA (L)	DRIVE SHAFT (L)	ASSE PIEDE (L)
4	**PAF8-04000021**	95218 11	PIN, ACERO INOX.	PIN, ROLL STAINLESS STEEL	CHIAVETTA INOX
5	**PAF8-04000003**	803740 1	PIÑÓN	GEAR, PINION	INGRANAGGIO
6	**PAF8-04000009**	803750A02	CUERPO BOMBA	HOUSING ASSEMBLY	CORPO POMPA
7	**PAF8-04000010**	803751 1	TAPA BOMBA	LINER	COPERCHIO POMPA
8	**PAF8-04000200**	803748 1	IMPULSOR	IMPELLER	GIRANTE
9	**PAF8-04000008**	16158 5	JUNTA	GASKET	GUARNIZIONE
10	**PAF8-04000007**	803753 1	PLACA	GUIDE PLATE	PIASTRA
11	**PAF8-04000006**	16158 6	JUNTA	GASKET	GUARNIZIONE
12	**PAF8-04000101**	95348	RETÉN ACEITE	OIL SEAL	PARAOLIO
13	**PAF8-04000004-1**	853795 5	GRUESO	SHIM	SPESSORE
14	**PAF8-04000005**	16158 7	JUNTA	GASKET	GUARNIZIONE
15	**PAF8-04000013**	804903	RETÉN AGUA	GROMMET	GOMMINO TENUTA ACQUA
16	**CM3V1-60217-0**	853762T01	ÁNODO	ANODO	ANODO
17	**PAF8-02000006S**	803755004	TUBO AGUA (S)	WATER TUBE (S)	TUBO ACQUA (S)
17	**PAF8-02000006L**	803755005	TUBO AGUA (L)	WATER TUBE (L)	TUBO ACQUA (L)
18	**PAF8-02000007**	804899002	RETÉN	GROMMET	GOMMINO TENUTA ACQUA
19	**PAF8-04000016**	895155	RETÉN	SEAL WATER	GUARNIZ. TENUTA ACQUA
20	**PAF8-04000015**	895156	PLACA, RETÉN AGUA	PLATE, SEAL WATER	PIASTRA, TENUTA ACQUA
21		804908A00	KIT JUNTAS	GASKET SET	KIT GAURNIZIONE
22	**PAF8-04000012-1**	16141	GRUESO 0,1	SHIM 0,1	SPESSORE 0,1
22	**PAF8-04000012-2**	813277	GRUESO 0,15	SHIM 0,15	SPESSORE 0,15
23	**PAF8-04010000**	803739 1	PIÑÓN ADELANTE	GEAR, FORWARD	MARCIA AVANTI
24	**PAF8-04000305**	16152	PASADOR	FOLLOWER CAM	CHIAVETTA
25	**PAF8-04000303**	803745 1	SELECTOR	CLUTCH	SELETTORE
26	**PAF8-04010000**	16150	PIN, SELECTOR	CLUTCH PIN	SPINOTTO SELETTORE
27	**PAF8-04000302**	892777002	MUELLE 58 mm	SPRING 58 mm	MOLLA 58 mm
28	**PAF8-04000301**	803744002	EJE HÉLICE	PROPELLER SHAFT	ASSE ELICA
29	**PAF8-04000012**	16140	ARANDELA	WASHER	RONDELLA
30	**PAF8-04000014**	803741 1	PIÑÓN ATRÁS	GEAR, REVERSE	MARCIA INDIETRO
31	**PAF8-04040001**	8037632T03	COJINETE DIÁBOLO	CARRIER BEARING	CUSCINETTO
32	**PAF8-04040002**	16131	ARO	O-RING	O-RING
33	**PAF8-04040004**	16130	RETÉN ACEITE	SEAL, OIL	PARAOLIO
34	**PAF8-04000019**	803743002	CIERRE HÉLICE	THRUST HOLDER	CHIUSURA ELICA
35	**PAF15-06000016**	16147	TUERCA HÉLICE	PROP NUT	DADO ELICA

4 STROKES TIEMPOS

8 HP BODENSEE (INTER.)
9.9 HP (232 CC)
13.5 HP (INTER.)
15 HP

2 STROKES TIEMPOS

6, 8, 9.9, 10, 13.5, 15 HP (1986-05)

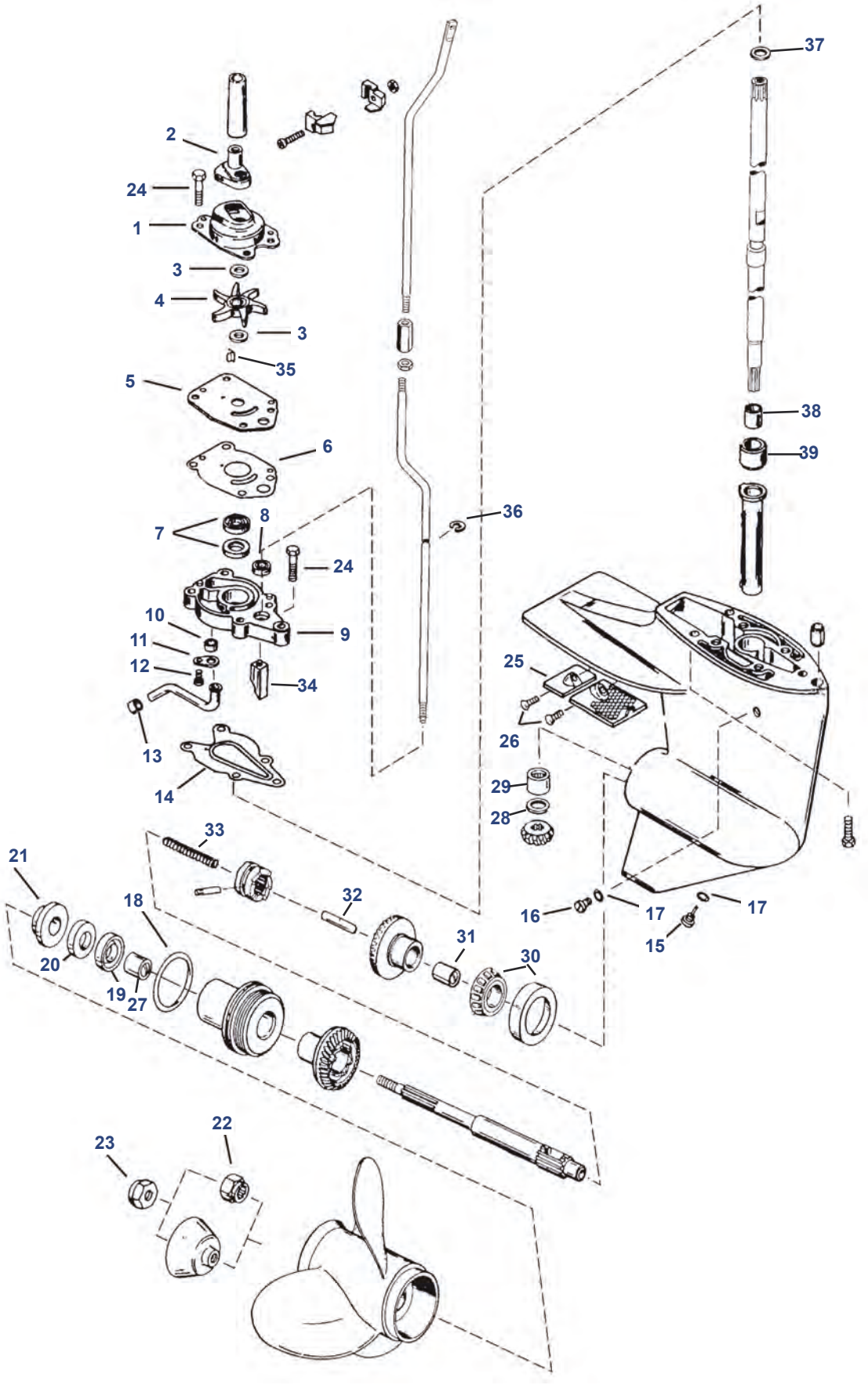

Nº	Ref.	R.O./ OEM	Descripción	Description	Descrizione
1	**REC46-42089A2**	46-42089A2	CUERPO BOMBA	PUMP HOUSING	CORPO POMPA
2	**REC26-421021**	26-42102-1	GRUESO	GROMMET	SPESSORE
3	**REC12-16448**	12-16448	ARANDELA	WASHER	RONDELLA
4	**REC47-420382**	47-42038-2	IMPULSOR	IMPELLER	GIRANTE
5	**REC42200**	42200	TAPA BOMBA	WEAR PLATE	COPERCHIO POMPA
6	**REC27-19202001**	27-19202	JUNTA	GASKET	GUARNIZIONE
7	**REC26-413651**	26-41365-1	RETÉN ACEITE	OIL SEAL	PARAOLIO
8	**REC25-822236**	25-822236	ARO	QUAD RING	O-RING
9	**REC46-42040T5**	46-42040T5	BASE BOMBA	PUMP BASE ASSEMBLY	BASE POMPA
10	**REC26-42133**	26-42133	RETÉN	SEAL	TENUTA
11	**REC42375**	42375	RETENEDOR	RETAINER	RITENITORE
12	**REC10-48408**	10-48408	TORNILLO	SCREW	VITE
13	**REC26-33613**	26-33613	RETÉN	SEAL	GOMMINO TENUTA
14	**REC27-192043**	27-19204-3	JUNTA	GASKET	GUARNIZIONE
15	**REC22-67892A05**	22-67892A1	TORNILLO DRENAJE	DRAINING SCREW	VITI DRENAGGIO
16	**REC10-79953Q04**	10-79953Q2	TORNILLOS	SCREW	VITI
17	**REC12-191833**	12-19183-3	JUNTA	GASKET	GUARNIZIONE
18	**REC25-33145**	25-33145	ARO TÓRICO	O-RING	O-RING
19	**REC26-66022**	26-66022	RETÉN ACEITE DESIGN I	OIL SEAL (DESIGN I)	PARAOLIO (DESIGN I)
19	**REC26-99325**	26-99325	RETÉN ACEITE DESIGN II	OIL SEAL (DESIGN II)	PARAOLIO (DESIGN II)
20	**REC26-821928**	26-821928	RETÉN ACEITE DESIGN III	OIL SEAL (DESIGN III)	PARAOLIO (DESIGN III)
21	**REC8219321**	821932-1	CIERRE HÉLICE	THRUST HUB	CHIUSURA ELICA
22	**REC23-420911**	23-42091-1	ESPACIADOR	SPACER	DISTANZIALE
23	**REC11-40140**	11-40140	TUERCA HÉLICE	PROP NUT	DADO ELICA
24	**REC10-82684430**	10-826844-30	TORNILLO	SCREW	VITE
25	**CM42121A2**	42121A2	ANODO ALUMINIO	ANODE ALUMINUM	ANODO ALLUMINIO
25	**CM42121**	42121A2	ANODO ZINC	ANODE ZINC	ANODO ZINCO
26		10-13954	TORNILLO	SCREW	VITE
27	**REC23-821927**	23-821927	CASQUILLO	BUSHING	BOCCOLA
28	**REC12-41369**	12-41369	ARANDELA	WASHER	RONDELLA
29		31-22756	RODAMIENTO	BEARING	CUSCINETTO
30	**REC31-821321A1**	31-821321A1	RODAMIENTO	BEARING	CUSCINETTO
31	**REC23-41367**	23-41367	CASQUILLO	BUSHING	BOCCOLA
32		813139	LEVA SELECTOR	CAM FOLLOWER	CHIAVETTA SELETTORE
33		24-42204	MUELLE	SPRING	MOLLA
34	**REC42039**	42039	LEVA CAMBIO	SHIFT CAM	ASSE CAMBIO
35	**REC28-42376A2**	28-42376A2	CHAVETA	KEY	CHIAVETTA
36	**REC52-42389**	52-42389	CLIP	CLIP	CLIP
37	**REC12-822248**	12-822248	ARANDELA	WASHER	RONDELLA
38	**REC23-823943**	23-823943	CASQUILLO	BUSHING	BOCCOLA
39	**REC23-823944**	23-823944	CASQUILLO	SLEEVE	BOCCOLA

Ref.	R.O.
REC26-41365A3	26-41365A3



Kit retenes cola
Gearcase seal kit
Kit tenuta piede

Ref.	R.O.
REC47-42038Q3	47-42038Q3



Kit reparación Bomba agua
Water Pump kit
Kit riparazione Pompa acqua

Ref.	R.O.
REC46-42089A5	46-42089A5



Kit reparación Bomba agua
Water Pump kit
Kit riparazione Pompa acqua

8 HP BODENSEE (INTER.)
9.9 HP (232 CC)
13.5 HP (INTER.)
15 HP

4 TIEMPOS STROKES

18XD, 20, 25 HP (1984-05)

2 TIEMPOS STROKES

Ref.	R.O.
REC46-99157T2	46-99157T2



Kit reparación Bomba agua
Water Pump kit
Kit riparazione Pompa acqua

Ref.	R.O.
REC47-85089Q4	47-85089Q4



Kit reparación Bomba agua
Water Pump kit
Kit riparazione Pompa acqua

Nº	Ref.	R.O./ OEM	Descripción	Description	Descrizione
1	**REC25-86203**	25-86203	RETÉN	SLINGER	TENUTA
2	**REC26-85090001**	26-85090	GRUESO	GROMMET	SPESSORE
3	**REC25-67202**	25-69202	ARO TÓRICO	O-RING	O-RING
4	**REC12-86645**	12-86645-1	ARANDELA	WASHER	RONDELLA
5	**REC47-8508910**	47-85089-10	IMPULSOR	IMPELLER	GIRANTE
6	**REC85083**	85083	TAPA BOMBA	WEAR PLATE	COPERCHIO POMPA
7	**REC27-993261**	27-99326-1	JUNTA	GASKET	GUARNIZIONE
8	**REC12-29245**	12-29245	ARANDELA	WASHER	RONDELLA
9	**REC310584**	25-35276	ARO TÓRICO	O-RING	O-RING
10	**REC301877**	25-85594	ARO TÓRICO	O-RING	O-RING
11	**REC301877**	26-99325	RETÉN	OIL SEAL	PARAOLIO
12	**REC10-79953Q04**	10-79953Q2	TORNILLO	SCREW	VITE
13	**REC22-67892A05**	22-67892A1	TORNILLO DRENAJE	DRAINING SCREW	VITE DRENAGGIO
14	**REC12-191833**	12-19183-3	JUNTA	GASKET	GUARNIZIONE
15	**TEN00812**	98432T6	ANODO ZINC	TRIM TAB ZINC	ANODO ZINCO
15	**CM984325A**	98432T6	ANODO ALUMINIO	TRIM TAB ALUMINUM	ANODO ALLUMINIO
16	**REC26-41132**	26-41132	RETÉN ACEITE	OIL SEAL	PARAOLIO
17	**REC26-76127**	26-41131	RETÉN ACEITE	OIL SEAL	PARAOLIO
18	**REC25-85549**	25-85549	ARO TÓRICO	O-RING	O-RING
19	**REC858498**	858498	CIERRE HÉLICE	THRUST HUB	CHIUSURA ELICA
20	**REC11-88228**	11-88228	TUERCA HÉLICE (PLÁSTICO)	PROP NUT (PLASTIC)	DADO ELICA (PLASTICA)
20	**REC11-4011912**	11-40119-12	TUERCA HÉLICE	PROP NUT (SEA PRO, MARATHON, 15, 25, SUPER 15)	DADO ELICA
21	**REC46-99157A02**	46-99157A02	CUERPO BOMBA	PUMP HOUSING	CORPO POMPA
22	**REC23-85095**	23-85095	CIERRE	INSULATOR	CHIUSURA
23		10-824832-4	TORNILLO	SCREW	VITE
24	**REC12-29245**	12-89302	ARANDELA	WASHER	RONDELLA
25	**REC28-8M0032838**	28-8M0032838	CHAVETA	KEY	CHIAVETTA
26	**REC31-98294A1**	31-98294A1	RODAMIENTO	BEARING	CUSCINETTO
27	**REC10-49908**	10-49908	TORNILLO	SCREW	VITE
28	**REC85094**	85094	LEVA	CAM FOLLOWER	CHIAVETTA
29	**REC23-85557**	23-85557	CASQUILLO	BUSHING	BOCCOLA
30	**REC31-66668A1**	31-99328A1	RODAMIENTO	BEARING	CUSCINETTO
31	**REC24-88680**	24-88680	MUELLE	SPRING	MOLLA
32	**REC31-21739**	31-21739	RODAMIENTO AGUJAS	BEARING, NEEDLE	CUSCINETTO
33	**REC85552001**	85552001	LEVA FUELLE	SHIFT BOOT	CUFFIA DEL CAMBIO
34		24-93007	MUELLE	SPRING	MOLLA
35	**REC17-85593**	17-85593	PASADOR	ROLL PIN	SPINOTTO
36	**REC17-85096**	17-85096	PASADOR	DRIVE PIN	SPINOTTO
37	**REC31-41326**	31-41326	RODAMIENTO	BEARING, UPPER DRIVE SHAFT	CUSCINETTO
38	**REC17-85500**	17-85500	PIN	ALIGNMENT PIN	SPINOTTO

Ref.	R.O.
REC26-85090A2	26-85090A2



Kit retenes cola (1984+)
Gearcase seal kit (1984+)
Kit tenuta piede (1984+)

Ref.	R.O.
REC26-85090A1	26-85090A1



Kit retenes cola (-1993)
Gearcase seal kit (-1993)
Kit tenuta piede (-1993)

25 HP
30, 40 HP (CARB 3 CYL) (EFI)
40 ITALY
45 BODENSEE
50 HP

25 - 50 HP (1997-06)

Ref.	R.O.
REC823547A2	823547A2



Kit retenes cola
Gearcase seal kit
Kit tenuta piede

Ref.	R.O.
REC821354A2	821354A2



Kit reparación Bomba agua
Water Pump kit
Kit riparazione Pompa acqua

Nº	Ref.	R.O./ OEM	Descripción	Description	Descrizione
1	**REC8235471**	823547-1	RETÉN TUBO AGUA	WATER TUBE SEAL	TENUTA TUBO ACQUA
2		46-821351A3	CUERPO BOMBA	PUMP HOUSING	CORPO POMPA
3	**REC12-86645**	12-86645-1	ARANDELA	WASHER	RONDELLA
4	**REC47-8508910**	47-85089-3	IMPULSOR	IMPELLER	GIRANTE
5	**REC27-822189**	27-822189	JUNTA	GASKET	GUARNIZIONE
6	**REC8213542**	821354-2	TAPA BOMBA	WEAR PLATE	COPERCHIO POMPA
7	**REC27-822217**	27-822217	JUNTA	GASKET	GUARNIZIONE
8	**REC26-821309**	26-821309	RETÉN ACEITE	OIL SEAL	PARAOLIO
9	**REC26-821310**	26-821310	RETÉN ACEITE	OIL SEAL	PARAOLIO
10	**REC46-821307A2**	46-821307A2	BASE BOMBA	PUMP BASE	BASE POMPA
11	**REC25-821308**	25-821308	ARO TÓRICO	O-RING	O-RING
12	**REC54-8M0064024**	823548	ABRAZADERA	CABLE TIE	FASCETTA
13	**REC822158**	822158	LEVA	BOOT	BOOT
14	**REC3852928**	25-26855	ARO TÓRICO	O-RING	O-RING
15	**REC301877**	25-85594	ARO TÓRICO	O-RING	O-RING
16	**REC12-29245**	12-29245	ARANDELA	WASHER	RONDELLA
17	**REC12-191833**	12-19183-3	JUNTA	GASKET	GUARNIZIONE
18	**REC22-67892A05**	22-67892A1	TORNILLO DRENAJE	DRAINING SCREW	VITE DRENAGGIO
19	**REC313339**	11-55910	TUERCA PIÑÓN	PINION NUT	DADO PIGNONE
20	**REC26-69188**	26-69188	RETÉN ACEITE	OIL SEAL	PARAOLIO
21	**REC26-69189**	26-69189	RETÉN ACEITE	OIL SEAL	PARAOLIO
22	**REC73345A1**	73345A1	CIERRE HÉLICE	THRUST HUB	CHIUSURA ELICA
23	**REC14-76281Q**	14-76281	ARANDELA	TAB WASHER	RONDELLA
24	**REC11-69578Q1**	11-69578A1	TUERCA HÉLICE	PROP NUT	DADO ELICA
25	**CM822157T2**	822157T2	ÁNODO ZINC	ANODE ZINC	ANODO ZINCO
25	**TEN00829AL**	822157T2	ÁNODO ALUMINIO	ANODE ALUMINUM	ANODO ALLUMINIO
26		52-812314T	SELECTOR	CLUTCH DOG	SELETTORE
27	**REC10-79953Q04**	10-79953Q2	TAPÓN	SCREW SET	TAPPO
28	**REC25-80863**	25-815460	ARO TÓRICO	O-RING	O-RING
29	**REC19291A3**	19291A3	COJINETE DIABOLO	BEARING CARRIER	CUSCINETTO
30	**REC31-21700**	31-21700	COJINETE	BEARING	CUSCINETTO
31	**REC43-803498T1**	43-803498T1	KIT PIÑONES MARCHA AVANTE	P/FORWARD GEAR SET	KIT PIGNONE MARCIA AVANTI
32	**REC43-822163T1**	43-822163T1	PIÑÓN MARCHA ATRÁS	REVERSE GEAR	PIGNONE MARCIA INDIETRO
33	**REC31-66668A1**	31-99328A1	COJINETE	BEARING	CUSCINETTO
34	**REC31-41326**	31-41326	COJINETE	BEARING	CUSCINETTO
35	**REC30-20839T**	30-20839T	COJINETE	BEARING	CUSCINETTO
36		821578	PASADOR	CAM FOLLOWER	CHIAVETTA
37		24-826199-1	MUELLE	SPRING	MOLLA
38		17-85093	PASADOR	CROSS PIN	CHIAVETTA
39	**REC24-38114**	24-38114	MUELLE	SPRING	MOLLA
40		10-824832-4	TORNILLO	SCREW	VITE
41	**REC28-8M0032838**	28-8M0032838	CHAVETA	KEY	CHIAVETTA
42		30-821311	RODAMIENTO	BEARING	CUSCINETTO
43		818226A1	KIT RETÉN ESCAPE	SEAL EXHAUST KIT	KIT TENUTA SCARICO
44	**REC17-85593**	17-85593	PIN	PIN	SPINOTTO
45	**REC17-822369**	17-822369	PIN	PIN	SPINOTTO
46	**REC8213161**	8213161	LEVA CAMBIO	SHIFT CAM	ALBERO CAMBIO
47	**REC31-821321A1**	31-821321A1	RODAMIENTO	BEARING	CUSCINETTO

4 STROKES TIEMPOS — 40, 50, 60 HP (4 CYL) (EFI) 40 CARB (3 CYL) (3.44" / 87.38 MM) Ø TORPEDO

2 STROKES TIEMPOS — 50, 55, 60 HP (3 CYL) (3.44" / 87.38 MM) Ø TORPEDO

Ref.	R.O.
REC26-814669A2	26-814669A2



Kit retenes cola
Gearcase seal kit
Kit tenuta piede

Ref.	R.O.
REC46-812966A12	46-812966A12



Kit reparación Bomba agua
Water Pump kit
Kit riparazione Pompa acqua

Ref.	R.O.
REC46-812966A11	46-812966A11



Kit reparación Bomba agua
Water Pump kit
Kit riparazione Pompa acqua

Nº	Ref.	R.O./ OEM	Descripción	Description	Descrizione
1	**REC43023**	43023	TUBO AGUA	TUBE SEAL	TUBO ACQUA
1	**REC893857**	859770-1	TUBO AGUA (4 TIEMPOS)	TUBE SEAL (FOR 4-STROKE)	TUBO ACQUA (4 TEMPI)
2	**REC23-43045**	23-43045	CASQUILLO	INSULATOR	GHIERA
3	**REC14334A3**	14334A3	CUERPO BOMBA AGUA	PUMP HOUSING	CORPO POMPA
4	**REC47-19453T**	47-19453T	IMPULSOR	IMPELLER	GIRANTE
5	**REC27-822189**	27-822189	JUNTA	GASKET	GUARNIZIONE
6	**REC19700A2**	19700A2	TAPA BOMBA AGUA	WEAR PLATE	COPERCHIO POMPA ACQUA
7	**REC27-8M4502052**	27-19701	JUNTA	GASKET	GUARNIZIONE
8	**REC46-812966A7**	46-812966A7	BASE BOMBA AGUA	PUMP BASE	BASE POMPA ACQUA
9	**REC25-30224**	25-30224	ARO TÓRICO	O-RING	O-RING
10	**REC26-814670**	26-814670	RETÉN ACEITE	OIL SEAL	PARAOLIO
11	**REC26-814669**	26-814669	RETÉN ACEITE	OIL SEAL	PARAOLIO
12		45-812731	EJE TRANMISIÓN	DRIVE SHAFT (LONG)	ASSE TRASMISSIONE
13	**REC26-8164641**	26-816464-1	RETÉN ACEITE	OIL SEAL	PARAOLIO
14	**REC25-45258**	25-45258	ARO TÓRICO	O-RING	O-RING
15	**REC53-29641**	53-29641	ARO RETENEDOR	RETAINING RING	O-RING
16	**REC12-191833**	12-19183-3	JUNTA	GASKET	GUARNIZIONE
17	**REC22-67892A05**	22-67892A1	TORNILLO DRENAJE	DRAINING SCREW	VITE DRENAGGIO
18	**REC10-79953Q04**	10-79953Q2	JUEGO TORNILLOS	SCREW KIT	KIT VITE
19	**REC76039-4**	76039-4	LEVA	SHIFT CAM	LEVA
20	**REC313339**	11-55910	TUERCA PIÑÓN	PINION NUT	DADO PIGNONE
21	**REC26-69188**	26-69188	RETÉN ACEITE	OIL SEAL	PARAOLIO
22	**REC26-69189**	26-69189	RETÉN ACEITE	OIL SEAL	PARAOLIO
23	**REC73345A1**	73345A1	TOPE HÉLICE	THRUST HUB	PUNTA ELICA
24	**REC14-76281Q**	14-76281	CIERRE HÉLICE	TAB WASHER	CHIUSURA ELICA
25	**REC11-69578Q1**	11-69578A1	TUERCA HÉLICE	PROP NUT	DADO ELICA
26	**REC31-77420A1**	31-77420A1	COJINETE	BEARING	CUSCINETTO
27	**REC983892**	31-812767A1	COJINETE	BEARING	CUSCINETTO
28	**REC52-850048T**	52-850048T	SELECTOR	CLUTCH DOG	SELETTORE
29	**REC25-815460**	25-815460	ARO TÓRICO	O-RING	O-RING
30	**REC19291A3**	19291A3	COJINETE DIÁBOLO	BEARING CARRIER	CUSCINETTO
31	**REC15-812770A1**	15-812770A1	KIT SUPLEMENTOS	SHIM SET	KIT SPESSORI
32		15-812769A1	KIT SUPLEMENTOS	SHIM SET	KIT SPESSORI
33	**REC31-21700**	31-21700	COJINETE	BEARING	CUSCINETTO
34	**REC43-803499T1**	43-803499T1	KIT PIÑONES MARCHA AVANTE 1.64:1	P/FORWARD GEAR SET (1.64:1 RATIO)	KIT PIGNONE MARCIA AVANTI 1.64:1
35		43-813695T	PIÑÓN MARCHA ATRÁS	REVERSE GEAR	PIGNONE MARCIA INDIETRO
36	**TEN00827**	17264T2	ÁNODO ZINC	TRIM TAB ZINC	ANODO ZINCO
37	**REC30-20839T**	30-20839T	COJINETE	BEARING	CUSCINETTO
38	**REC31-21739**	31-21739	COJINETE	BEARING	CUSCINETTO
39	**REC812929-1**	812929-1	PASADOR	CAM FOLLOWER	CHIAVETTA
40	**REC20843**	20843	PASADOR	SLIDE	CHIAVETTA
41	**REC24-815418**	24-815418	MUELLE	SPRING	MOLLA
42	**REC17-8M0020942**	17-38113	PASADOR	CROSS PIN	CHIAVETTA
43	**REC24-30893**	24-30893	MUELLE	SPRING	MOLLA
44	**REC23-813696A2**	23-813696A2	CUERPO VARILLA CAMBIO	BUSHING ASSEMBLY	SEDE ASTICELLA CAMBIO
45		11-812820-1	TUERCA RETENEDORA	RETAINING NUT	DADO
46	**REC8M0005777**	12-858234	ARANDELA PLÁSTICO	WASHER-PLASTIC	RONDELLA PLASTICA
47		10-824832-4	TORNILLO	SCREW	VITE
48	**REC28-8M0032831**	28-8M0032831	CHAVETA	KEY	CHIAVETTA
49		818226A1	KIT RETÉN	SEAL PLATE KIT	KIT TENUTA
50	**REC17-43043**	17-43043	PASADOR	PIN	SPINOTTO
51	**REC889246A96**	889246A96	EJE CAMBIO	SHIFT SHAFT	ASSE CAMBIO
52	**REC31-812768**	31-812768	RODAMIENTO	BEARING	CUSCINETTO

50-150 HP (1987+) (4.25" / 107.95 MM) Ø TORPEDO BIG FOOT

30-125 HP (3 / 4 CYL) INLINE (4.25" / 107.95 MM) Ø TORPEDO BIG FOOT

Ref.	R.O.
REC26-43035A4	26-43035A4



Kit retenes cola
Gearcase seal kit
Kit tenuta piede

Ref.	R.O.
REC12094	46-43024A7



Kit reparación Bomba agua
Water Pump kit
Kit riparazione Pompa acqua

Ref.	R.O.
REC47-43026Q06	47-43026Q06



Kit reparación Bomba agua
Water Pump kit
Kit riparazione Pompa acqua

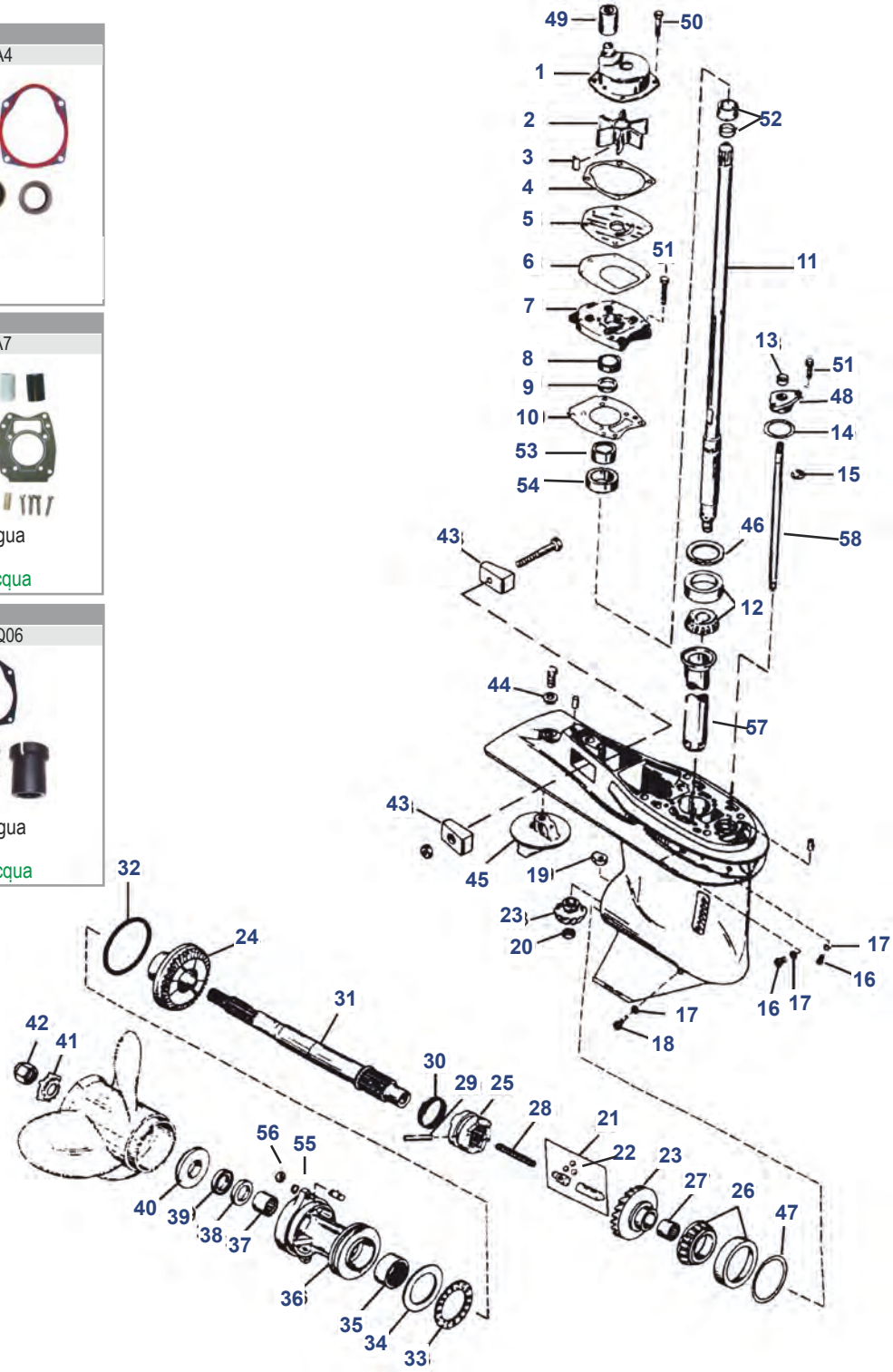

Nº	Ref.	R.O./ OEM	Descripción	Description	Descrizione
1	**REC817275A2**	817275A2	BOMBA AGUA	WATER PUMP ASSEMBLY	POMPA ACQUA
2	**REC47-43026Q02**	47-43026T2	IMPULSOR	IMPELLER	GIRANTE
3	**REC28-8M0032833**	28-43037	CHAVETA	KEY	CHIAVETTA
4	**REC27-8172771**	27-817277-1	JUNTA	GASKET	GUARNIZIONE
5	**REC8172761**	817276-1	TAPA BOMBA	WEAR PLATE	COPERCHIO POMPA
6	**REC27-430331**	27-43033-1	JUNTA	GASKET	GUARNIZIONE
7	**REC43055A4**	43055A4	BASE BOMBA AGUA	PUMP BASE ASSEMBLY	BASE POMPA AQUA
8	**REC26-43036**	26-43036	RETÉN ACEITE	OIL SEAL	PARAOLIO
9	**REC26-43035**	26-43035	RETÉN ACEITE	OIL SEAL	PARAOLIO
10	**REC27-430472**	27-43047-2	JUNTA	GASKET	GUARNIZION
11		45-43031A1	EJE TRANMISIÓN (20" 2 TIEMPOS 70-125HP)	DRIVE SHAFT (LONG) (20" 2 STROKES 70-125 HP)	ASSE TRASMISSIONE (20" 2 TEMPI 70-125 HP)

Nº	Ref.	R.O./ OEM	Descripción	Description	Descrizione
11		45-826736A1	EJE TRANMISIÓN (20" 2 TIEMPOS 50-60 HP)	DRIVE SHAFT (LONG) (20" 2 STROKES 50-60 HP)	ASSE TRASMISSIONE (20" 2 TEMPI 50-60 HP)
11	**REC45-858765T1**	45-858765T1	EJE TRANMISIÓN (20" 4 TIEMPOS 70-115 HP)	DRIVE SHAFT (LONG) (20" 4 STROKES 70-115 HP)	ASSE TRASMISSIONE (20" 4 TEMPI 70-115 HP)
11	**REC45-878575T1**	45-878575T1	EJE TRANMISIÓN (25" 4 TIEMPOS 70-115 HP)	DRIVE SHAFT (LONG) (25" 4 STROKES 70-115 HP)	ASSE TRASMISSIONE (25" 4 TEMPI 70-115 HP)
11	**REC45-854808A1**	45-854808A1	EJE TRANMISIÓN (20" 4 TIEMPOS 30-50 HP)	DRIVE SHAFT (LONG) (20" 4 STROKES 30-50 HP)	ASSE TRASMISSIONE (20" 4 TEMPI 30-50 HP)
11	**REC45-859105A1**	45-859105A1	EJE TRANMISIÓN (20" 4 TIEMPOS 40-60 HP)	DRIVE SHAFT (LONG) (20" 4 STROKES 40-60 HP)	ASSE TRASMISSIONE (20" 4 TEMPI 40-60 HP)
11	**REC45-875222A1**	45-875222A1	EJE TRANMISIÓN (25" 4 TIEMPOS 40-60 HP)	DRIVE SHAFT (LONG) (25" 4 STROKES 40-60 HP)	ASSE TRASMISSIONE (25" 4 TEMPI 40-60 HP)
12	**REC31-42677A1**	31-42677A1	COJINETE	BEARING	CUSCINETTO
13	**REC26-8164641**	26-816464-1	RETÉN ACEITE	OIL SEAL	PARAOLIO
14	**REC25-457101**	25-45710	ARO TÓRICO	O-RING	O-RING
15	**REC53-29641**	53-29641	ARO RETENEDOR	RETAINING RING	O-RING
16	**REC10-79953Q04**	10-79953Q2	JUEGO TORNILLOS	SCREW KIT	KIT VITE
17	**REC12-191833**	12-19183-3	JUNTA	GASKET	GUARNIZIONE
18	**REC22-67892A05**	22-67892A1	TORNILLO DRENAJE	DRAINING SCREW	VITE DRENAGGIO
19	**REC76039-4**	76039-4	LEVA (3 DIENTES)	SHIFT CAM (3 JAW)	LEVA (3 DENTI)
19	**REC850307**	850307	LEVA (6 DIENTES)	SHIFT CAM (6 JAW)	LEVA (6 DENTI)
20	**REC11-35921**	11-35921	TUERCA HÉLICE	PINION NUT	DADO ELICA
21	**REC850315A1**	850315A1	KIT PASADORES LEVA	CAM FOLLOWER KIT	KIT CHIAVETTA LEVA
22		30-44530	BOLA	BALL	PALLA
23		43-803500T1	KIT PIÑONES MARCHA AVANTE REDUCCIÓN 2.31:1, 3 DIENTES	P/FORWARD GEAR SET (2.31:1 RATIO 3 JAW)	KIT PIGNONE MARCIA AVANTE RIDUZZIONE 2.31:1 3 DENTI
23		43-803501T1	KIT PIÑONES MARCHA AVANTE REDUCCIÓN 2.31:1, 6 DIENTES	P/FORWARD GEAR SET (2.31:1 RATIO 6 JAW)	KIT PIGNONE MARCIA AVANTE RIDUZZIONE 2.31:1 6 DENTI
24		43-12635T	MARCHA ATRÁS 3 DIENTES	REVERSE GEAR (3 JAW)	MARCIA INDIETRA (3 DENTI)
24		43-850034T	MARCHA ATRÁS 6 DIENTES	REVERSE GEAR (6 JAW)	MARCIA INDIETRA (6 DENTI)
25	**REC52-822539T**	52-822539T	SELECTOR 3 DIENTES	CLUTCH DOG (3 JAW)	SELETTORE (3 DENTI)
25	**REC52-850048T**	52-850048T	SELECTOR 6 DIENTES	CLUTCH DOG (6 JAW)	SELETTORE (6 DENTI)
26	**REC31-30894A1**	31-30894A1	COJINETE	BEARING	CUSCINETTO
27	**REC31-30895T**	31-30895	COJINETE	BEARING	CUSCINETTO
28		24-30622	MUELLE 3 DIENTES	SPRING (3 JAW)	MOLLA (3 DENTI)
28		24-850327	MUELLE 6 DIENTES	SPRING (6 JAW)	MOLLA (6 DENTI)
29	**REC17-8M0084681**	17-30632	PASADOR	CROSS PIN	CHIAVETTA
30	**REC24-30893**	24-30893	MUELLE	SPRING	MOLLA
31	**REC44-12238T**	44-12238T	EJE HÉLICE 3 DIENTES	PROP SHAFT (3 JAW)	ASSE ELICA (3 DENTI)
31	**REC44-850308**	44-850308	EJE HÉLICE 6 DIENTES	PROP SHAFT (6 JAW)	ASSE ELICA (6 DENTI)
32	**REC310414**	25-97386	ARO TÓRICO	O-RING	O-RING
33	**REC31-12576**	31-12576	COJINETE	THRUST BEARING	CUSCINETTO
34	**REC12-12577**	12-12577	ARANDELA	THRUST WASHER	RONDELLA
35	**REC31-12578T**	31-12578T	COJINETE	BEARING	CUSCINETTO
36	**REC12596T2**	12596T2	COJINETE DIÁBOLO	BEARING CARRIER	CUSCINETTO
37	**REC387247**	31-30956	COJINETE	BEARING	CUSCINETTO
38	**REC26-76868**	26-76868	RETÉN ACEITE	OIL SEAL	PARAOLIO
39	**REC26-70081**	26-70081	RETÉN ACEITE	OIL SEAL	PARAOLIO
40	**REC13191Q01**	13191A1	TOPE HÉLICE	THRUST HUB	PUNTA ELICA
41	**REC90508-ZW1-003**	14-816629Q	CIERRE HÉLICE	TAB WASHER	CHIUSURA ELICA
42	**REC90301-ZW1-003**	11-52407Q1	TUERCA HÉLICE	PROP NUT	DADO ELICA
43	**CM826134**	826134Q	ÁNODO ZINC	ANODE ZINC	ANODO ZINCO
43	**CM826134A**	826134Q	ÁNODO ALUMINIO	ANODE ALUMINUM	ANODO ALLUMINIO
44	**REC12-45176**	12-45176	ARANDELA	WASHER	RONDELLA
45	**CM31640**	31640Q4	ÁNODO ZINC	TRIM TAB ZINC	ANODO ZINCO
45	**CM31640A**	31640Q4	ÁNODO ALUMINIO	TRIM TAB ALUMINUM	ANODO ALLUMINIO
46	**REC15-8M0063265**	15-44492A1	KIT SUPLEMENTOS	SHIM SET	KIT SUPPLEMENTI
47	**REC15-44491A1**	15-44491A1	KIT SUPLEMENTOS	SHIM SET	KIT SUPPLEMENTI
48	**REC23-43052A4**	23-43052A4	CASQUILLO	BUSHING ASSEMBLY	GHIERA
49	**REC43023**	43023	TUBO AGUA BLANCO	WATER TUBE SEAL (WHITE)	TUBO ACQUA BIANCO
49	**REC43023-2**	43023-2	TUBO AGUA NEGRO	WATER TUBE SEAL (BLACK)	TUBO ACQUA NERO
50	**REC10-82684430**	10-826844-30	TORNILLO	SCREW	VITE
51		10-826844-25	TORNILLO	SCREW	VITE
52	**REC42461A1**	42461A1	CASQUILLO	SLEEVE / RING KIT	GHIERA
53	**REC26-43036**	26-43036	RETÉN SUPERIOR	SEAL UPPER	TENUTA SUPERIORE
54	**REC26-43035**	26-43035	RETÉN INFERIOR	SEAL LOWER	TENUTA INFERIORE
55	**REC12-855941**	12-855941	ARANDELA	WASHER	RONDELLA
56	**REC11-401378**	11-401378	TUERCA	NUT	DADO
57	**REC43046**	43046	MANGUITO ACEITE	OILER TUBE	TUBO OLIO
58	**REC853906A1**	853906A1	EJE CAMBIO 20"	SHIFT SHAFT 20"	ASSE CAMBIO 20"
58	**REC853908A1**	853908A1	EJE CAMBIO 25"	SHIFT SHAFT 25"	ASSE CAMBIO 25"

135-300 HP VERADO 4, 6 CYL (2006+)

Ref.	R.O.
REC817275A09	817275A09



Kit reparación Bomba agua
Water Pump kit
Kit riparazione Pompa acqua

Ref.	R.O.
REC47-43026Q06	47-43026Q06



Kit reparación Bomba agua
Water Pump kit
Kit riparazione Pompa acqua

Ref.	R.O.
REC26-830749A01	26-830749A01



Kit retenes cola
Gearcase seal kit
Kit tenuta piede

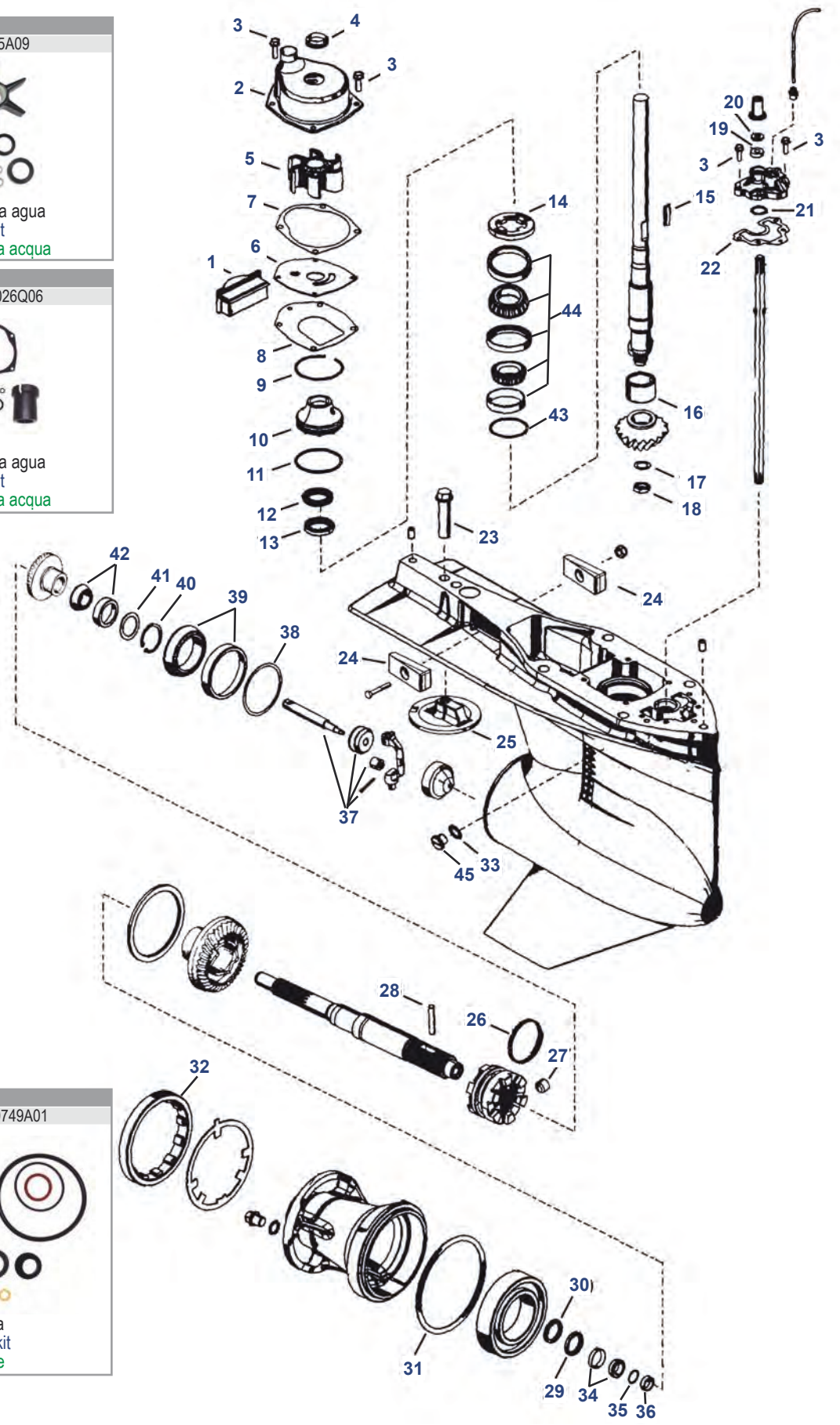

Nº	Ref.	R.O./OEM	Descripción	Description	Descrizione
1	**REC821526001**	821526001	RETÉN	FILLER BLOCK	CORPO SUPERIORE POMPA
2	**REC817275A1**	817275A1	CUERPO SUPERIOR BOMBA	UPPER WATER PUMP HOUSING	VITE (M6-16)
3	**REC10-816928**	10-816928	TORNILLO (M6-16)	SCREW (M6-16)	PARAOLIO
4	**REC26-816575A2**	26-816575A2	RETÉN	FACE SEAL	GIRANTE
5	**REC47-43026Q02**	47-43026T2	IMPULSOR	IMPELLER	COPERCHIO POMPA
6	**REC8172761**	817276-1	TAPA BOMBA	WEAR PLATE	GUARNIZIONE
7	**REC27-8172771**	27-817277-1	JUNTA	GASKET	GUARNIZIONE
8	**REC27-430331**	27-43033-1	JUNTA	GASKET	O-RING
9	**REC53-880719**	53-880719	ARO RETENEDOR	RETAINING RING	BASE POMPA
10	**REC8M0007131**	888909A1	BASE BOMBA	PUMP BASE	O-RING
11	**REC25-896523**	25-896523	ARO TÓRICO	O-RING	PARAOLIO
12	**REC26-888920**	26-888920	RETÉN ACEITE	OIL SEAL	PARAOLIO
13	**REC26-888921**	26-888921	RETÉN ACEITE	OIL SEAL	FERMO
14	**REC8245191**	824519-1	RETENEDOR	RETAINER	CHIAVETTA
15	**REC28-8M0032833**	28-43037	CHAVETA	KEY	CUSCINETTO
16	**REC387817**	31-42647A1	COJINETE	BEARING	RONDELLA
17	**REC350038**	12-92721	ARANDELA	WASHER	DADO
18	**REC11-35921**	11-35921	TUERCA	NUT	PARAOLIO
19	**REC26-8164641**	26-816464-1	RETÉN ACEITE	OIL SEAL	RONDELLA
20	**REC12-77674**	12-77674	ARANDELA	WASHER	O-RING
21	**REC25-36318**	25-896322	ARO TÓRICO	O-RING	GUARNIZIONE
22	**REC27-880729**	27-880729	JUNTA	GASKET	VITE
23	**REC10-806327**	10-806327	TORNILLO	SCREW	ANODO ALLUMINIO
24	**CM826134A**	826134Q	ÁNODO ALUMINIO	ANODE ALUMINUM	ANODO
24	**CM826134**	826134Q	ÁNODO	ANODE	ANODO
25	**CM76214**	76214Q5	ÁNODO	ANODIC PLATE	ANODO ALLUMINIO
25	**CM762145A**	76214Q5	ÁNODO ALUMINIO	ANODIC PLATE ALUMINUM	MOLLA
26	**REC24-30893**	24-30893	MUELLE	SPRING	PERNO DI FERMO
27	**REC17-828356**	17-828356	PASADOR	DETENT PIN	CHIAVETTA
28	**REC17-8M0084681**	17-30632	PASADOR	CROSS PIN	PARAOLIO
29	**REC26-888483**	26-888906	RETÉN ACEITE	OIL SEAL	PARAOLIO
30	**REC26-888483**	26-888483	RETÉN ACEITE	OIL SEAL	O-RING
31	**REC25-31534**	26-896524	ARO TÓRICO	O-RING	DADO
32	**REC8M2011027**	79448	TUERCA	COVER NUT	PARAOLIO
33	**REC26-830749**	26-830749	RETÉN	OIL SEAL	CUSCINETTO
34	**REC31-884330T01**	31-884330T01	RODAMIENTO	BEARING	SUPPLEMENTI
35	**REC15-891936A01**	15-891936A01	KIT SUPLEMENTOS	SHIM KIT	KIT DISTANZIALE
36	**REC23-891919001**	23-891919001	ESPACIADOR	SPACER	SPESSORE
37	**REC19755T7**	19755T7	EJE KIT	SHIFT SPOOL	KIT ASSE
38		15-884328A01	KIT SUPLEMENTOS	SHIM KIT	KTI SUPPLEMENTI
39	**REC31-884323T01**	31-884323T01	RODAMIENTO	BEARING	CUSCINETTO
40	**REC53-8M0051043**	53-8M0051043	CLIP	CLIP	CLIP
41	**REC8M0053823**	8M0053823	ARANDELA	WASHER	RONDELLA
42	**REC31-884325T01**	31-884325T01	RODAMIENTO	BEARING	CUSCINETTO
43	**REC15-38657A1**	15-38657A1	SUPLEMENTOS	SHIM KIT	SUPPLEMENTI
44	**REC15-884327A02**	15-884327A01	KIT RODAMIENTOS	BEARING KIT	KIT CUSCINETTO
45	**REC10-79953Q04**	10-79953Q04	TORNILLO	BOLT	VITE

3.9, 4, 4.5, 6, 7.5, 9.8 HP (1975-86)

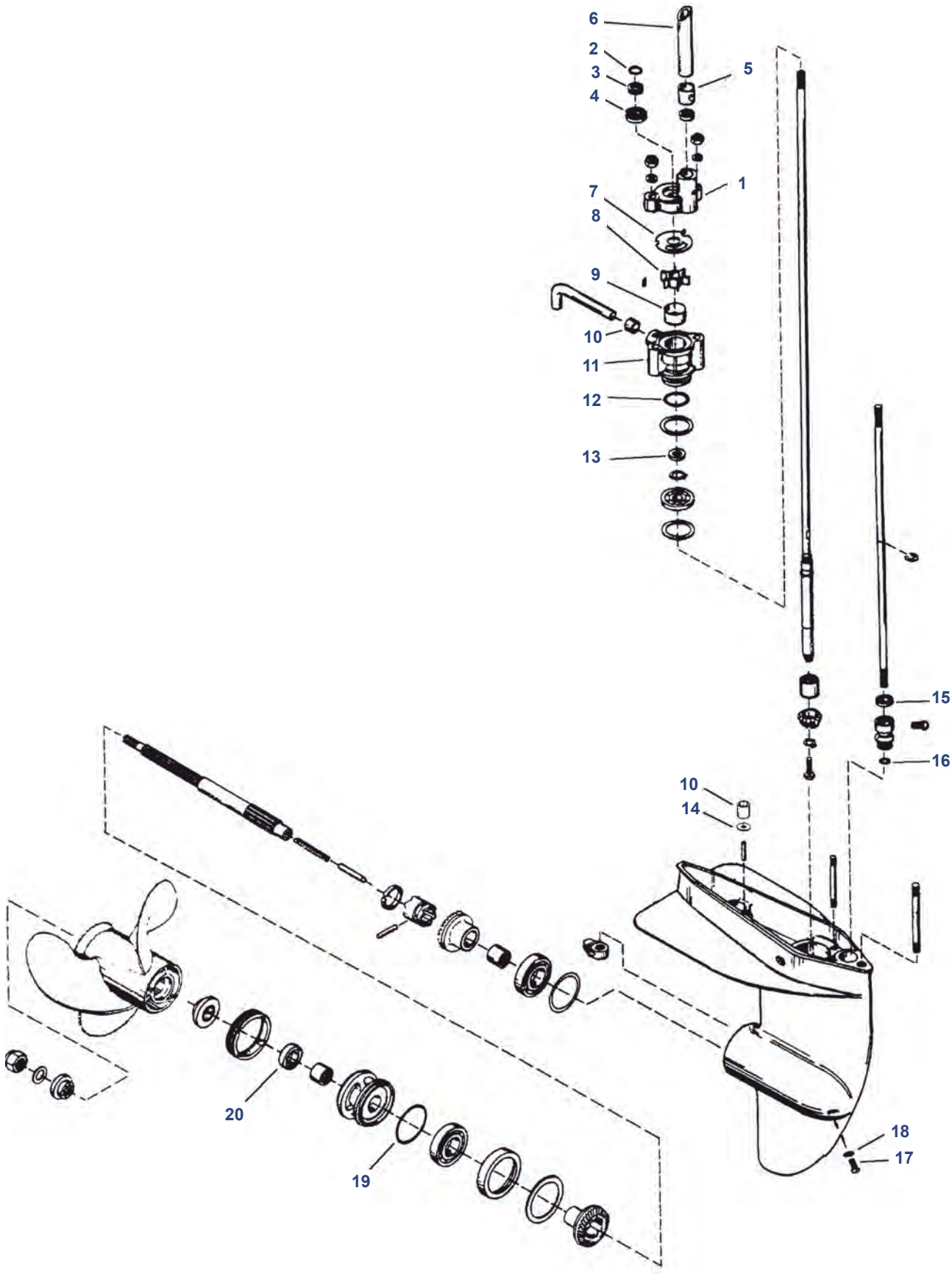

Nº	Ref.	R.O./ OEM	Descripción	Description	Descrizione
1	**REC93224A1**	93224A1	CUERPO BOMBA	PUMP HOUSING	CORPO POMPA
2	**REC3852045**	25-62704	ARO TÓRICO	O-RING	O-RING
3		25-30526	RETÉN	SEAL	PARAOLIO
4	**REC26-30913**	26-30913	RETÉN ACEITE	OIL SEAL	PARAOLIO
5	**REC26-36558**	26-36558	GRUESO	GROMMET	SPESSORE
6		23-31792	TUBO GUÍA	GUIDE TUBE	TUBO GUIDA
7	**REC46895**	46895	TAPA BOMBA	WEAR PLATE	COPERCHIO POMPA
8	**REC47-89980**	47-89980	IMPULSOR	IMPELLER (0.438 I.D.)	GIRANTE
8	**REC47-89981**	47-89981	IMPULSOR	IMPELLER (0.456 I.D.)	GIRANTE
9	**REC70977T**	70977	TAPA BOMBA	PUMP CUP	COPERCHIO POMPA
10	**REC26-33613**	26-33613	RETÉN	SEAL	TENUTA
11	**REC46-70941T01**	46-70941A1	BASE BOMBA USAR CON IMPULSOR REC47-89981	PUMP BASE (USE WITH REC47-89981 IMPELLER)	BASE POMPA DA UTILIZZARE CON GIRANTE REC47-89981
12	**REC309731**	25-29439	ARO TÓRICO	O-RING	O-RING
13	**REC327031**	26-30900	RETÉN ACEITE BASE BOMBA REC46-70941T01	OIL SEAL (FOR REC46-70941T01 PUMP BASE)	PARAOLIO BASE POMPA REC46-70941T01
13	**REC26-897153**	26-96063	RETÉN ACEITE BASE BOMBA REC46-92970A1	OIL SEAL (FOR REC46-92970A1 PUMP BASE)	PARAOLIO BASE POMPA REC46-92970A1
14	**REC23-86215**	23-86215	ESPACIADOR	SPACER	SPESSORE
15		26-30696	RETÉN ACEITE	OIL SEAL	PARAOLIO
16	**REC303347**	25-26802	ARO TÓRICO	O-RING	O-RING
17	**REC10-79953Q04**	10-79953Q2	JUEGO TORNILLO	SCREW SET	KIT VITE
18	**REC12-191833**	12-20260	JUNTA	GASKET	GUARNIZIONE
19	**REC25-30529**	25-30529	ARO TÓRICO	O-RING	O-RING
20	**REC26-66022**	26-66022	RETÉN ACEITE	OIL SEAL	PARAOLIO

Ref.	R.O.
REC46-70941A3	46-70941A3



Kit reparación Bomba agua
Water Pump kit
Kit riparazione Pompa acqua

Ref.	R.O.
REC47-89980T1	47-89980T1



Kit reparación Bomba agua
Water Pump kit
Kit riparazione Pompa acqua

Ref.	R.O.
REC47-89981Q1	47-89981Q1



Kit reparación Bomba agua
Water Pump kit
Kit riparazione Pompa acqua

Ref.	R.O.
REC26-77066A1	26-77066A1



Kit retenes cola
Gearcase seal kit
Kit tenuta piede

30-70 HP (2, 3, 4 CYL) (1977-97)

Ref.	R.O.
REC46-77177A3	46-77177A3



Kit reparación Bomba agua
Water Pump kit
Kit riparazione Pompa acqua

Ref.	R.O.
REC47-89983Q1	47-89983Q1



Kit reparación Bomba agua
Water Pump kit
Kit riparazione Pompa acqua

Ref.	R.O.
REC26-79831A1	26-79831A1



Kit reparación Bomba agua
Water Pump kit
Kit riparazione Pompa acqua

Nº	Ref.	R.O./ OEM	Descripción	Description	Descrizione
1	**REC26-38452**	26-38452	GRUESO	GROMMET	SPESSORE
2	**REC12-38453**	12-38453	JUNTA	GASKET	GUARNIZIONE
3	**REC11-8267089**	11-13438	CIERRE	LOCK NUT	CHIUSURA
4	**REC12-29245**	12-29245	ARANDELA	WASHER	RONDELLA
5	**REC46-77822A1**	46-77822A1	CUERPO BOMBA AGUA	WATER PUMP HOUSING	CORPO POMPA ACQUA
6	**REC48753**	48753	TAPA BOMBA AGUA	WATER PUMP CUP	COPERCHIO POMPA ACQUA
7	**REC47-89983T**	47-89983T	IMPULSOR	IMPELLER	GIRANTE
8	**REC27-19551**	27-19551	JUNTA	GASKET	GUARNIZIONE
9	**REC32768**	32768	TAPA BOMBA	WEAR PLATE	COPERCHIO POMPA
10	**REC27-19553**	27-19553	JUNTA	GASKET	GUARNIZIONE
11	**REC46-77177A1**	46-77177A1	BASE BOMBA AGUA	WATER PUMP BASE	BASE POMPA ACQUA
12	**REC26-90562**	26-90562	RETÉN ACEITE	OIL SEAL	PARAOLIO
13	**REC26-79831**	26-79831	RETÉN ACEITE	OIL SEAL	PARAOLIO
14	**REC302588**	25-26722	ARO TÓRICO	O-RING	O-RING
15	**REC27-19552**	27-19552	JUNTA	GASKET	GUARNIZIONE
16	**REC37721001**	37721	RETÉN	SEAL	TENUTA
17		45-98180	EJE LARGO	DRIVE SHAFT (LONG)	ASSE LUNGO
18	**REC12-77674**	12-77674	JUNTA	GASKET	GUARNIZIONE
19	**REC26-8164641**	26-816464-1	RETÉN ACEITE	OIL SEAL	PARAOLIO
20	**REC23-77631A2**	23-77631A2	ACOPLE EJE	BUSHING ASSEMBLY	ACCOPPIO ASSE
21	**REC25-25439**	25-25439	ARO TÓRICO	O-RING	O-RING
22	**REC53-29641**	53-29641	ARO RETENEDOR	RETAINING RING	O-RING
23	**REC12-191833**	12-19183-3	JUNTA	GASKET	GUARNIZIONE
24	**REC22-67892A05**	22-67892A1	TORNILLO DRENAJE	DRAINING SCREW	VITE DRENAGGIO
25	**REC313339**	11-55910	TUERCA PIÑÓN	PINION NUT	DADO PIGNONE
26	**REC11-859124**	11-45812	CIERRE TUERCA	LOCK NUT	CHIUSURA DADO
27	**REC76039-4**	76039-4	LEVA	SHIFT CAM	LEVA
28	**REC31-38356A1**	31-38356A1	COJINETE	BEARING	CUSCINETTO
29		44-75365	EJE HÉLICE	PROP SHAFT	ASSE ELICA
30	**REC3852866**	25-31986	ARO TÓRICO	O-RING	O-RING
31	**REC28-30281**	28-30281	CHAVETA	KEY	CHIAVETTA
32	**REC26-69188**	26-69188	RETÉN ACEITE	OIL SEAL	PARAOLIO
33	**REC26-69189**	26-69189	RETÉN ACEITE	OIL SEAL	PARAOLIO
34	**REC73345A1**	73345A1	TOPE HÉLICE	THRUST HUB	PUNTA ELICA
35	**REC14-76281Q**	14-76281	CIERRE HÉLICE	TAB WASHER	CHIUSURA ELICA
36	**REC11-69578Q1**	11-69578A1	TUERCA HÉLICE	PROP NUT	DADO ELICA
37	**CM31640A**	31640Q4	ÁNODO ALUMINIO	ANODE ALUMINUM	ANODO ALLUMINIO
37	**CM31640**	31640Q4	ÁNODO ZINC	ANODE ZINC	ANODO ZINCO
38		52-92911T	SELECTOR	CLUTCH DOG	SELETTORE
39	**REC31-77420A1**	31-77420A1	COJINETE	BEARING	CUSCINETTO
40	**RM15-92881A1**	15-92881A1	KIT SUPLEMENTOS	SHIM SET	KIT SUPPLEMENTI
41		15-38374A1	KIT SUPLEMENTOS	SHIM SET	KIT SUPPLEMENTI
42		43-803497T1	KIT PIÑONES MARCHA AVANTE	P/FORWARD GEAR SET	KIT PIGNONI MARCIA IN AVANTI
43		43-79158T	MARCHA ATRÁS	REVERSE GEAR	MARCIA INDIETRO
44	**REC30-20839T**	30-20839T	COJINETE	BEARING	CUSCINETTO
45		69386A1	COJINETE DIÁBOLO	BEARING CARRIER	CUSCINETTO
46		14-53012	ARANDELA	KEYED WASHER	RONDELLA
47		11-87763	TUERCA	COVER NUT	DADO
48	**REC31-21700**	31-21700	COJINETE	BEARING	CUSCINETTO
49	**REC31-21739**	31-21739	COJINETE	BEARING	CUSCINETTO
50		38441	PASADOR	CAM FOLLOWER	CHIAVETTA
51	**REC20843**	20843	PASADOR	SLIDE	CHIAVETTA
52	**REC24-38114**	24-38114	MUELLE	SPRING	MOLLA
53	**REC17-8M0020942**	17-38113	PASADOR	CROSS PIN	CHIAVETTA
54	**REC25-20273**	25-20273	PASADOR	SLINGER	CHIAVETTA]
55	**REC10-79953Q04**	10-79953Q2	JUEGO TORNILLOS	SCREW SET	KIT VITE
56	**REC31-62091T**	31-6291T	RODAMIENTO	BEARING	CUSCINETTO
57	**REC8M0032837**	8M0032837	CHAVETA	KEY	CHIAVETTA

2.0, 2.4, 2.5 / V6
L4, L6, V6 (65-225 HP)

Ref.	R.O.
REC47-89984Q5	47-89984Q5



Kit reparación Bomba agua
Water Pump kit
Kit riparazione Pompa acqua

Ref.	R.O.
REC46-96148A8	46-96148A8



Kit reparación Bomba agua
Water Pump kit
Kit riparazione Pompa acqua

Ref.	R.O.
REC26-55682A1	26-55682A1



Kit retenes cola
Gearcase seal kit
Kit tenuta piede

Ref.	R.O.
REC11-52707Q1	11-52707Q1



Kit cierre hélice
Prop nut kit
Kit chiusura elica

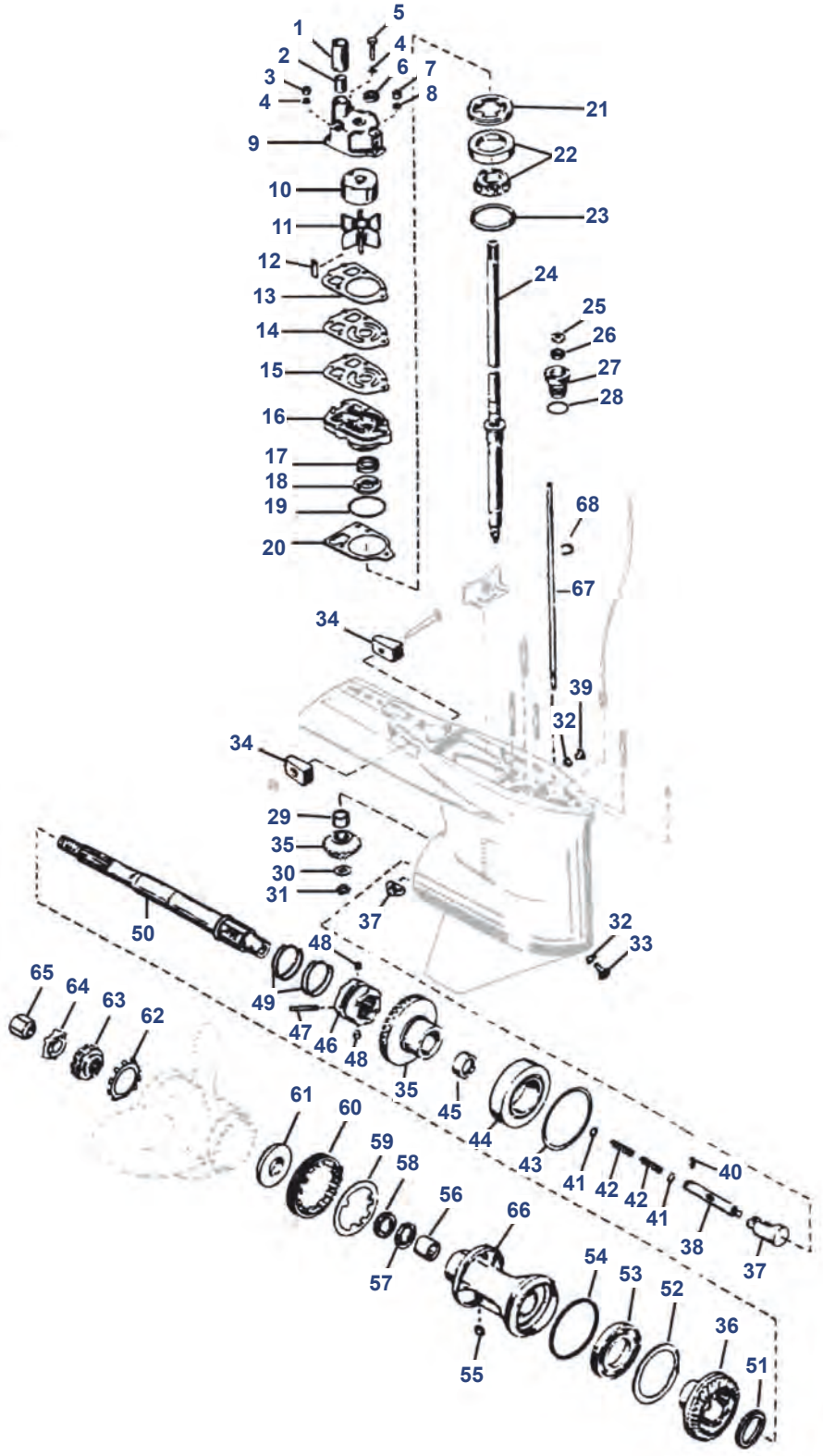

Nº	Ref.	R.O./OEM	Descripción	Description	Descrizione
1	REC23-29804T	23-29804	TUBO GUÍA	TUBE GUIDE	TUBO GUIDA
2	REC26-38970	26-38970	RETÉN	SEAL	TENUTA
3	REC11-8267089	11-13438	TUERCA	NUT	DADO
4	REC12-29245	12-29245	ARANDELA	WASHER	RONDELLA
5	REC10-96411	10-96411	TORNILLO	SCREW	VITE
6	REC25-30271	25-30271	PASADOR	SLINGER	CHIAVETTA
7	REC11-13436	11-13436	TUERCA	NUT	DADO
8		12-36001	ARANDELA	WASHER	RONDELLA
9	REC46-96148T1	46-96148T1	CUERPO BOMBA	PUMP HOUSING	CORPO POMPA
10	REC48752T	48752T	TAPA BOMBA	PUMP CUP	COPERCHIO POMPA
11	REC47-89984T4	47-89984T4	IMPULSOR	IMPELLER	GIRANTE
12	REC8M0032834	28-56654	CHAVETA	KEY	CHIAVETTA
13	REC27-858524	27-858524	JUNTA	GASKET	GUARNIZIONE

Nº	Ref.	R.O./OEM	Descripción	Description	Descrizione
14	**REC324351**	32435	CIERRE BOMBA	WEAR PLATE	CHIUSURA POMPA
15	**REC27-856081**	27-85608-1	JUNTA	GASKET	GUARNIZIONE
16	**REC46-8M0077147**	46-42579A3	BASE BOMBA	PUMP BASE	BASE POMPA
17	**REC26-16977**	26-16977	RETÉN ACEITE	OIL SEAL	PARAOLIO
18	**REC26-89238**	26-89238	RETÉN ACEITE	OIL SEAL	PARAOLIO
19	**REC25-90011**	25-90011	ARO TÓRICO	O-RING	O-RING
20	**REC27-426311**	27-42631-1	JUNTA	GASKET	GUARNIZIONE
21	**REC8245191**	824519-1	RETENDOR	RETAINER	RITENETORE
22	**REC31-36387A1**	31-36387A1	COJINETE	BEARING	CUSCINETTO
22	**REC31-53079A1**	31-63079A1	COJINETE PARA EJE 11163	BEARING	CUSCINETTO
22		31-69220T	COJINETE PARA EJE 11162	BEARING	CUSCINETTO
23	**REC15-42637A1**	15-42637A1	KIT SUPLEMENTOS	SHIM SET	KIT SUPPLEMENTI
24		45-44000-1	EJE COLA 20" MODELOS V	DRIVE SHAFT 20" V MODELS	ASSE PIEDE 20" V MODELLO
24		45-42646	EJE COLA	DRIVE SHAFT	ASSE PIEDE
24		45-98682A1	EJE TRANSMISIÓN	DRIVE	ASSE TRASMISIONE
25	**REC12-77674**	12-77674	JUNTA	GASKET	GUARNIZIONE
26	**REC26-8164641**	26-816464-1	RETÉN ACEITE	OIL SEAL	PARAOLIO
27	**REC23-77631A2**	23-77631A2	CASQUILLO	BUSHING	GHIERA
28	**REC25-25439**	25-25439	ARO TÓRICO	O-RING	O-RING
29	**REC387817**	31-42647A1	COJINETE MODELOS V6	BEARING V6 MODELS	CUSCINETTO MODELLO V6
29	**REC31-32898T**	31-32898T	COJINETE MODELOS EN LÍNEA	BEARING INLINE MODELS	CUSCINETTO MODELLO IN LINIA
30	**REC350038**	12-92721	ARANDELA	WASHER	RONDELLA
31	**REC11-35921**	11-35921	TORNILLO	NUT	VITE
32	**REC12-191833**	12-19183-3	JUNTA	GASKET	GUARNIZIONE
33	**REC22-67892A05**	22-67892A1	TORNILLO DRENAJE	DRAINING SCREW	VITE DRENAGGIO
34	**CM826134**	826134Q	ÁNODO ZINC	ANODE ZINC	ANODO ZINCO
34	**CM826134A**	826134Q	ÁNODO ALUMINIO	ANODE ALUMINUM	ANODO ALLUMINIO
35		43-68548T3	PIÑÓN ATAQUE	PINION GEAR (STRAIGHT)	ATTACCO PIGNONE
35		43-68447T1	MARCHA AVANTE RECTO	FORWARD GEAR (STRAIGHT)	MARCIA IN AVANTI RETTO
35		43-44102A7 43-803619T1	MARCHA AVANTE 2.00:1	P/FORWARD GEAR (2.00:1)	MARCIA IN AVANTI (2.00:1)
35		43-44104A8 43-803615T2	MARCHA AVANTE 1.87:1	P/FORWARD GEAR (1.87:1)	MARCIA IN AVANTI (1.87:1)
35	**REC43-859321A3**	43-859321A3	MARCHA AVANTE 1.75:1	P/FORWARD GEAR (1.75:1)	MARCIA IN AVANTI (1.75:1)
36		43-76250T	MARCHA ATRÁS RECTO 2.0:1	REVERSE GEAR (STRAIGHT) 2.0:1	MARCIA INDIETRO RETTO 2.0:1
36		43-824987A2	MARCHA ATRÁS 2:1	REVERSE GEAR 2:1	MARCIA INDIETRO 2:1
36		43-85462T	MARCHA ATRÁS. PIN	REVERSE GEAR. PIN	MARCIA INDIETRO. PIN
36		43-824986A2	MARCHA ATRÁS 1.87:1	REVERSE GEAR 1.87:1	MARCIA INDIETRO 1.87:1
36		43-859322A1	MARCHA ATRÁS 1.78:1	REVERSE GEAR 1.75:1	MARCIA INDIETRO 1.75:1
37	**REC89594A1**	89594A1	KIT PASADORES	CAM FOLLOWER KIT	KIT CHIAVETTA
38		79911A1	KIT BARRAS CON PASADOR	ROD KIT RATCHETING VERSION	KIT SBARRE CON SPINOTTO
38		828827	BARRA SIN PASADOR	ROD NON-RATCHETING VERSION	SBARRA SENZA SPINOTTO
39	**REC10-79953Q04**	10-79953Q2	KIT TORNILLOS	SCREW SET	KIT VITI
40		17-78906	PASADOR	PIN	CHIAVETTA
41	**REC12-78910**	12-78910	ARANDELA	WASHER	RONDELLA
42	**REC24-79910**	24-79910	MUELLE	SPRING	MOLLA
43	**REC15-47397A1**	15-47397A1	KIT SUPLEMENTOS	SHIM SET	KIT SUPPLEMENTI
44	**REC31-30894A1**	31-30894A1	COJINETE MODELOS EN LÍNEA	BEARING INLINE MODELS	CUSCINETTO MODELLO IN LINIA
44	**REC31-78172A1**	31-78172A1	COJINETE MODELOS V 3.543"	BEARING V-MODELS 3.543"	CUSCINETTO MODELLO V 3.543"
45	**REC382343**	31-54928-1	COJINETE MODELOS V	BEARING V-MODELS	CUSCIENTTO MODELLO V
45	**REC31-30895T**	31-30895T	COJINETE MODELOS EN LÍNEA	BEARING INLINE MODELS	CUSCINETTO MODELLO IN LINIA
46	**REC52-853594T**	52-853594T	SELECTOR	CLUTCH DOG	SELETTORE
46	**REC52-822539T**	52-822539T	SELECTOR MODELOS EN LÍNEA	CLUTCH DOG INLINE MODELS	SELETTORE MODELLO IN LINIA
46		52-823174T	SELECTOR MODELOS V CON PASADOR	CLUTCH DOG V-MODELS RACHETING	SELETTORE MODELLO V CON SPINOTTO
46	**REC52-859340T**	52-859340T	SELECTOR MODELOS V SIN PASADOR	CLUTCH DOG V-MODELS NON-RACHETING	SELETTORE MODELLO V SENZA SPINOTTO
47	**REC17-8M0084681**	17-30632	PASADOR MODELOS EN LÍNEA	CROSS PIN INLINE MODELS	CHIAVETTA MODELLO IN LINIA
47	**REC17-8M0084243**	17-78905	PASADOR MODELOS V	CROSS PIN V-MODELS	CHIAVETTAMODELLO V
48		17-78909	PASADOR (VERSIÓN 1 PIN)	DETENT PIN (SINGLE PIN VERSION)	CHIAVETTA(1 SPINOTTO)
48	**REC17-828356**	17-828356	PASADOR (VERSIÓN 2 PINES)	DETENT PIN (DOUBLE PIN VERSION)	CHIAVETTA (2 SPINOTTI)
49	**REC24-30893**	24-30893	MUELLE (VERSIÓN SIMPLE)	SPRING (SINGLE VERSION)	MOLLA (VERSIONE SIMPLE)
49	**REC24-78962**	24-78962	MUELLE (VERSIÓN DOBLE)	SPRING (DOUBLE VERSION)	MOLLA (VERSIONE DOPPIA)
50	**REC44-94148**	44-94148	EJE HÉLICE (V6)	PROP SHAFT (V6)	ASSE ELICA (V6)
50		44-93003	EJE HÉLICE (6 EN LÍNEA)	PROP SHAFT (6 IN LINE)	ASSE ELICA (6 IN LINIA)
51	**REC23-824108**	23-824108	ESPACIADOR	THRUST SPACER	DISTANZIALE
52	**REC681001**	68100-1	ARO	THRUST RING	O-RING
53	**REC30-88957T**	30-88957T	COJINETE	BEARING	CUSCINETTO
54	**REC25-31534**	25-896524	ARO TÓRICO	O-RING	O-RING
55	**REC28-30281**	28-30281	CHAVETA	KEY	CHIAVETTA
56	**REC387247**	31-30956T	COJINETE	BEARING	CUSCINETTO
57	**REC26-76868**	26-76868	RETÉN ACEITE	OIL SEAL	PARAOLIO
58	**REC26-12224**	26-12224	RETÉN ACEITE	OIL SEAL	PARAOLIO
59	**REC14-79447**	14-79447	ARANDELA CIERRE	KEYED WASHER	RONDELLA CHIUSURA
60	**REC8M2011027**	79448	TOPE TUERCA	COVER NUT	PUNTA DADO
61	**REC12-835467Q01**	12-835467-1	TOPE HÉLICE	THRUST HUB	PUNTA ELICA
62	**REC13-423511**	13-42351-1	CIERRE HÉLICE	LOCKWASHER	CHIUSURA ELICA
63	**REC12-31211Q03**	12-31211A3	ARANDELA	WASHER	RONDELLA
64	**REC90508-ZW1-003**	14-816629Q	ARANDELA	TAB WASHER	RONDELLA
65	**REC90301-ZW1-003**	11-827614	TUERCA	LOCK NUT	DADO
66	**REC434391**	43567T1	COJINETE DIÁBOLO	BEARING CARRIER	CUSCINETTO
67		76062A1	EJE CAMBIO LARGO	SHIFT SHAFT (LONG)	ASSE CAMBIO LUNGO
68	**REC53-29641**	53-29641	ARO RETENEDOR	RETAINING RING	O-RING

3.0L: 225 CARB / 225, 250 EFI, DFI

Ref.	R.O.
REC817275A6	817275A6



Kit reparación Bomba agua
Water Pump kit
Kit riparazione Pompa acqua

Ref.	R.O.
REC47-43026Q06	47-43026Q06



Kit reparación Bomba agua
Water Pump kit
Kit riparazione Pompa acqua

Ref.	R.O.
REC26-816575A5	26-816575A5



Kit retenes cola
Gearcase seal kit
Kit tenuta piede

Ref.	R.O.
REC26-816575A4	26-816575A4

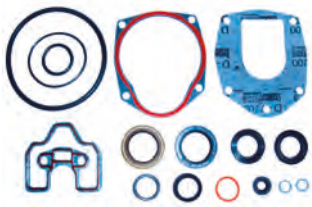

Kit retenes cola
Gearcase seal kit
Kit tenuta piede

Ref.	R.O.
REC11-52707Q1	11-52707Q1



Kit cierre hélice
Prop nut kit
Kit chiusura elica

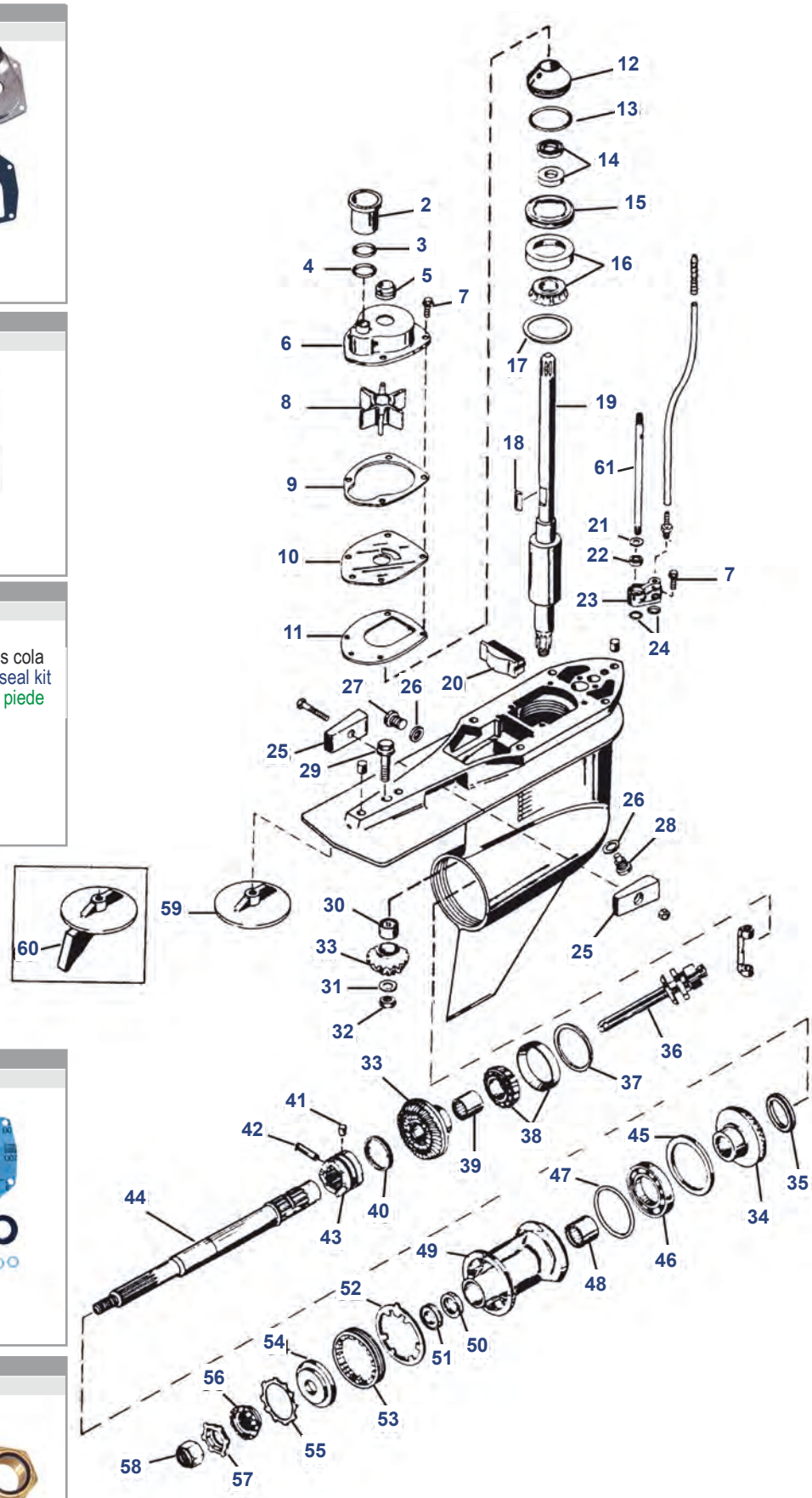

Nº	Ref.	R.O./OEM	Descripción	Description	Descrizione
2		832942A1	TUBO AGUA	COUPLING ASSY.	TUBO ACQUA
3	**REC25-35027**	25-35027	ARO TÓRICO	O-RING	O-RING
4	**REC25-21836**	25-21836	ARO TÓRICO	O-RING	O-RING
5	**REC26-816575A2**	26-816575A2	RETÉN GOMA	FACE SEAL	TENUTA GOMMA
6	**RM817275A1**	817275A1	TAPA BOMBA	WATER PUMP ASSY.	COPERCHIO POMPA
7	**REC10-816928**	10-19937-16	TORNILLO	SCREW	VITE
8	**REC47-43026Q02**	47-43026T2	IMPULSOR	IMPELLER	GIRANTE
9	**REC27-8172771**	27-817277-1	JUNTA	GASKET	GUARNIZIONE
10	**REC8172761**	817276-1	TAPA BOMBA	WEAR PLATE	COPERCHIO POMPA
11	**REC27-430331**	27-43033-1	JUNTA	GASKET	GUARNIZIONE
12	**REC807929A1**	807929A1	BASE BOMBA	CARRIER ASSY.	BASE POMPA
13	**REC25-90011**	25-90011	ARO TÓRICO	O-RING	O-RING
14	**REC26-66302**	26-66302	RETÉN	OIL SEAL	PARAOLIO
15	**REC8245191**	824519-1	RETENEDOR	RETAINER	RITENETORE
16	**REC31-36387A1**	31-36387A1	COJINETE	BEARING	CUSCINETTO
17	**REC15-42637A1**	15-42637A1	SUPLEMENTO	SHIM	SPESSORE
18	**REC28-8M0032833**	28-43037	CHAVETA	KEY	CHIAVETTA
19			EJE TRANMISIÓN	DRIVE SHAFT	ASSE TRASMISSIONE
20	**REC821526001**	821526	TAPÓN SEPARADOR	FILLER BLOCK	TAPPO
21	**REC12-77674**	12-77674	JUNTA	GASKET	GUARNIZIONE
22	**REC26-8164641**	26-816464-1	RETÉN	OIL SEAL	PARAOLIO
23	**REC23-815921A21**	23-815921A4	CUERPO VARILLA	SHIFT BUSHING	CORPO ASTICELLA
24	**REC25-36318**	25-36318	ARO TORICO	O-RING	O-RING
25	**CM826134**	826134Q	ÁNODO ZINC	ANODE ZINC	ANODO ZINCO
25	**CM826134A**	826134Q	ÁNODO ALUMINIO	ANODE ALUMINUM	ANODO ALLUMINIO
26	**REC12-191833**	12-19183-2	JUNTA	GASKET	GUARNIZIONE
27	**REC10-79953Q04**	10-79953Q2	TORNILLO	SCREW SET	VITE
28	**REC22-67892A05**	22-67892A1	TORNILLO DRENAJE	DRAINING SCREW	VITE DRENAGGIO
29	**REC10-806327**	10-806327	TORNILLO	SCREW	VITE
30	**REC387817**	31-42647A1	COJINETE	BEARING	CUSCINETTO
31	**REC350038**	12-92721	ARANDELA	WASHER	RONDELLA
32	**REC11-35921**	11-35921	TUERCA	NUT	DADO
33	**REC43-859321A3**	43-859321A3	KIT PIÑONES ATAQUE (1.75:1)	P/FORWARD GEAR (1.75:1)	KIT PIGNONI AVANTI (1.75:1)
33		43-828072A2	KIT PIÑONES ATAQUE (1.62:1)	P/FORWARD GEAR (1.62:1)	KIT PIGNONI AVANTI (1.62:1)
34		43-859322A1	KIT PIÑONES M. ATRÁS (1.75:1)	REVERSE GEAR (1.75:1)	KIT PIGNONI INDIETRO (1.75:1)
34	**REC43-828073A1**	43-828073A1	KIT PIÑONES M. ATRÁS (1.62:1)	REVERSE GEAR (1.62:1)	KIT PIGNONI INDIETRO (1.62:1)
35	**REC23-824108**	23-824108	ESPACIADOR	THRUST SPACER	DISTANZIAELE
36	**REC818349T1**	818349T1	EJE CAMBIO	SHIFT SPOOL	ASSE CAMBIO
37	**REC15-47397A1**	15-47397A1	SUPLEMENTO	SHIM (3.500 O.D.)	SPESSORE
37	**REC15-44491A1**	15-44491A1	SUPLEMENTO	SHIM (3.265 O.S.)	SPESSORE
38	**REC31-35928T1**	31-35928A1/T1	COJINETE	BEARING (1.875 I.D./3.500 O.D.)	CUSCINETTO
38	**REC31-828439A2**	31-828439A2	COJINETE	BEARING (1.875 I.D./3.265 O.D.)	CUSCINETTO
38	**REC31-30894A1**	31-30894A1	COJINETE	BEARING (1.750 I.D./3.265 O.D.)	CUSCINETTO
39	**REC31-30895T**	31-30895T	COJINETE	BEARING	CUSCINETTO
40	**REC24-30893**	24-30893	MUELLE	SPRING	MOLLA
41	**REC17-828356**	17-828356	TAPA PASADOR	DETENT PIN	CHIAVETTA
42	**REC17-8M0084681**	17-30632	PASADOR	CROSS PIN	CHIAVETTA
43	**REC52-853594T**	52-853594T	SELECTOR	CLUTCH DOG	SELETTORE
43	**REC52-859340T**	52-859340T	SELECTOR	CLUTCH DOG	SELETTORE
44	**REC44-824110**	44-824110	EJE HÉLICE	PROP SHAFT	ASSE ELICA
45	**REC681001**	68100-1	ARO	THRUST RING	O-RING
46	**REC30-88957T**	30-88957T	COJINETE	BEARING	CUSCINETTO
47	**REC25-31534**	25-31534	ARO TÓRICO	O-RING	O-RING
48	**REC387247**	30-30956	COJINETE	BEARING	CUSCINETTO
49	**REC818763A10**	818763A11/T11	COJINETE COLA	BEARING CARRIER	CUSCINETTO PIEDE
50	**REC26-76868**	26-14077, 26-76868	RETÉN	OIL SEAL	PARAOLIO
51	**REC26-12224**	26-12224	RETÉN	OIL SEAL	PARAOLIO
52	**REC14-18323**	14-18323	ARANDELA	TAB WASHER	RONDELLA
53	**REC8M2011027**	79448	TUERCA CIERRE	COVER NUT	DADO CHIUSURA
54	**REC12-31211Q01**	12-835467	TOPE HÉLICE	THRUST WASHER	PUNTA ELICA
55	**REC13-423511**	13-42351-1	CIERRE	LOCKWASHER	CHIUSURA
56	**REC12-31211Q03**	12-31211A3	TOPE CIERRE	TAB WASHER RECEIVER	PUNTA CHIUSURA
57	**REC90508-ZW1-003**	14-816629	CIERRE HELICE	TAB WASHER	CHIUSURA ELICA
58	**REC11-52707Q1**	11-827614Q	TUERCA CIERRE	LOCK NUT	DADO CHIUSURA
59	**CM762145**	76214Q5	ÁNODO	ANODE	ANODO
59	**CM762145A**	76214Q5	ÁNODO ALUMINIO	ANODE ALUMINUM	ANODO ALLUMINIO
60	**CM31640**	31640Q4	ÁNODO	ANODE	ANODO
60	**CM31640A**	31640Q4	ÁNODO ALUMINIO	ANODE ALUMINUM	ANODO ALLUMINIO
61	**REC824145**	824145	EJE CAMBIO	SHIFT SHAFT	ASSE CAMBIO

KITS PIÑONES
GEAR SETS
KITS PIGNONI

MODELO MODEL MODELLO	SERIE SERIAL SERIE	REDUCCIÓN RATIO RIDUZIONE	DIENTES JAW DENTI	KIT COMPLETO COMPLETE GEAR SET KIT COMPLETO		KIT PIÑONES ATAQUE PINION & FORWARD GEAR SET KIT PIGNONE ATTACCO		PIÑONES MARCHA ATRÁS REVERSE GEAR PIGNONE MARCIA INDIETRA	
				REF	R.O. OEM	REF	R.O. OEM	REF	R.O. OEM
40 - 50 HP (3 Cyl.)	9973100 +	1.83:1 (12:22)				**REC43-803498T1**	43-803498T1	**REC43-822163T1**	43-8822163T1
50 HP (3 Cyl.)	9683055 - 9973099	1.64:1 (14:23)				**REC43-803499T1**	43-803499T1		43-813695T
55 HP (3 Cyl.)	9741042 +								
60 HP (3 Cyl.)	9683055 +								
L4 100 HP (1.85L)	9523034 +	2.07:1 (14:29) Selector / Cluth / Selettore **REC52-850048T**	6	**REC11557**			43-803028T1 43-881260A5		43-850036T
L4 115 HP (1.85L) 115 EFI (1.75L) 115 Optimax (1.50L)	955971 +								
L4 125 HP (1.85L) Classic	9793577+								
V6 200, 225 (3.0 L DFI) (1998+)	OG590000+	1.75:1 (12:21)				**REC43-859321A3**	43-859321A3		43-8859322A1
V6 225, 250 (3.0 L EFI) (1995+)	OG129222+								
V6 225 Seapro (3.0 L Carb) (1994-98)	OG245605 - OG437999	1.62:1 (13:21)	6			**REC43-878087A2**	43-878087A2	**REC43-828073A1**	43-828073A1
V6 225 (3.0 L Carb) (1994-98)	OD280813+								
V6 150 HP (1985)	6616991 - OA904645	2.0 (14:28)		**REC11770**			43-803619T1		43-85462T
V6 175 HP (1980-81)	5393737 - 668750								
V6 200 HP (1980-81)	5393737 - 607319								
V6 150 HP (XR4, MAG III) 150 EFI (1993-98)	OD082000 - OG437999	1.87:1 (15:28)		**REC43-44104T2**	43-44104T2		43-44104A8		43-824986A2
V6 175, 175 EFI (1985-98)	661875 - OG437999								
V6 200, 200 EFI (1985-98)	6625221 - OG437999								
V6 220 HP (1987-88)	B117319 +								
V6 225 HP	06437999	1.62 (13:21)			43-828072A2		43-828072A2		43-828073A1
V6- 3.0 L Carb									
V6 225 Marathon									
V6 225 Seapro									

GUÍA PIÑONES
PINIONS APPLICATION
GUIDA PIGNONE

HP	Cyl.	AÑO YEAR ANNO	PAÍS COUNTRY PAESE	SERIE SERIAL SERIE	KIT COMPLETO COMPLET GEAR SET KIT COMPLETO	PIÑÓN ATAQUE FORWARD & PINION PIGNONE AVVANTI	MARCHA ATRÁS REVERSE GEAR MARCIA INDIETRA	MARCHA ADELANTE FORWARD BEARING MARCIA AVVANTI
40	4	1989+	USA	0C159200 +				**REC31-38356A1**
40	4	1989+	BEL	9570790 +				**REC31-38356A1**
45	4	1986	USA	5531630 +				**REC31-38356A1**
45	4	1986	AUS	8063985 +				**REC31-38356A1**
45	4	1986	BEL	9248006 +				**REC31-38356A1**
45	4	1986	CAN	7143688 +				**REC31-38356A1**
50	4	1980-85	USA	5531630 +				**REC31-38356A1**
50	4	1980-85	AUS	8063985 +				**REC31-38356A1**
50	4	1980-85	BEL	9248006 +				**REC31-38356A1**
50	4	1980-85	CAN	7143688 +				**REC31-38356A1**
40	3	1997-98	USA	0G531301 +		**REC43-803498T1**	**REC43-822163T1**	**REC31-66668A1**
40	3	1997-98	BEL	9973100 +		**REC43-803498T1**	**REC43-822163T1**	**REC31-66668A1**
50	3	1991-95	USA	0D000750 - 0G589999		**REC43-803499T1**		**REC983892**
50	3	1991-95	BEL	9683055 - 9973099		**REC43-803499T1**		**REC983892**
50	3	1998	USA	0G590000 +		**REC43-803498T1**	**REC43-822163T1**	**REC31-66668A1**
50	3	1998	BEL	9973100 +		**REC43-803498T1**	**REC43-822163T1**	**REC31-66668A1**
55	3	1996	USA	0D000750 +		**REC43-803499T1**		**REC983892**
55	3	1996	BEL	9741042 +		**REC43-803499T1**		**REC983892**
60 Standard, Non-Bigfoot	3	1991-95	USA	0D000750 +		**REC43-803499T1**		**REC983892**
60 Standard, Non-Bigfoot	3	1991-95	BEL	9683055 +		**REC43-803499T1**		**REC983892**
60 3 Jaw Rev. Clutch Bigfoot	3	1991-95	USA	0D000750 - 0G589999				**REC31-30894A1**
60 3 Jaw Rev. Clutch Bigfoot	3	1991-95	BEL	9683055-9973099				**REC31-30894A1**
60 6 Jaw Rev. Clutch Bigfoot	3	1991-95	USA	0D000750 - 0G589999				**REC31-30894A1**
60 6 Jaw Rev. Clutch Bigfoot	3	1991-95	BEL	9683055 - 9973099				**REC31-30894A1**
60 6 Jaw Rev. Clutch Bigfoot	3	1998	USA	590000 +				**REC31-30894A1**
60 6 Jaw Rev. Clutch Bigfoot	3	1998	BEL	9973100 +				**REC31-30894A1**
70 3 Jaw Rev. Clutch	3	1987	USA	0A996142 - 0C221999				**REC31-30894A1**
70 3 Jaw Rev. Clutch	3	1987	BEL	9483121 - 9589038				**REC31-30894A1**
70 6 Jaw Rev. Clutch	3	1987	USA	0A996142 - 0C221999				**REC31-30894A1**
70 6 Jaw Rev. Clutch	3	1987	BEL	9483121 - 9589038				**REC31-30894A1**

HP	Cyl.	AÑO YEAR ANNO	PAÍS COUNTRY PAESE	SERIE SERIAL SERIE	KIT COMPLETO COMPLET GEAR SET KIT COMPLETO	PIÑÓN ATAQUE FORWARD & PINION PIGNONE AVVANTI	MARCHA ATRÁS REVERSE GEAR MARCIA INDIETRA	MARCHA ADELANTE FORWARD BEARING MARCIA AVVANTI
75 3 Jaw Rev. Clutch	3	1990-93	USA	0A996142 +				REC31-30894A1
75 3 Jaw Rev. Clutch	3	1990-93	BEL	9483121 +				REC31-30894A1
75 6 Jaw Rev. Clutch	3	1994-98	USA	0A996142 +				REC31-30894A1
75 6 Jaw Rev. Clutch	3	1994-98	BEL	9483121 +				REC31-30894A1
80 3 Jaw Rev. Clutch	3	1987	USA	0A996142 - 0C221999				REC31-30894A1
80 3 Jaw Rev. Clutch	3	1987	BEL	9483121 - 9589038				REC31-30894A1
80 6 Jaw Rev. Clutch	3	1987	USA	0A996142 - 0C221999				REC31-30894A1
80 6 Jaw Rev. Clutch	3	1987	BEL	9483121 - 9589038				REC31-30894A1
90 3 Jaw Rev. Clutch	3	1987	USA	0A996142 +				REC31-30894A1
90 3 Jaw Rev. Clutch	3	1987	BEL	9483121 +				REC31-30894A1
90 6 Jaw Rev. Clutch	3	1987	USA	0A996142 +				REC31-30894A1
90 6 Jaw Rev. Clutch	3	1987	BEL	9483121 +				REC31-30894A1
100 3 Jaw Rev. Clutch	4	1988-93	USA	0B209468 +				REC31-30894A1
100 3 Jaw Rev. Clutch	4	1988-93	BEL	9523034 +				REC31-30894A1
100 High Altitude 3 Jaw Rev. Clutch		1988-93	USA	0B209468 +				REC31-30894A1
100 High Altitude 3 Jaw Rev. Clutch		1988-93	BEL	9523034 +				REC31-30894A1
100 6 Jaw Rev. Clutch	4	1988-98	USA	0B209468 +	REC11557			REC31-30894A1
100 6 Jaw Rev. Clutch	4	1988-98	BEL	9523034 +	REC11557			REC31-30894A1
100 High Altitude 6 Jaw Rev. Clutch		1988-93	USA	0B209468 +				REC31-30894A1
100 High Altitude 6 Jaw Rev. Clutch		1988-93	BEL	9523034 +				REC31-30894A1
115 3 Jaw Rev. Clutch	4	1988-93	USA	0C100000 +				REC31-30894A1
115 3 Jaw Rev. Clutch	4	1988-93	BEL	9559771 +				REC31-30894A1
115 High Altitude 3 Jaw Rev. Clutch		1989-93	USA	0C100000 +				REC31-30894A1
115 High Altitude 3 Jaw Rev. Clutch		1989-93	BEL	9559771 +				REC31-30894A1
115 6 Jaw Rev. Clutch	4	1989-93	USA	0C100000 +	REC11557			REC31-30894A1
115 6 Jaw Rev. Clutch	4	1989-93	BEL	9559771 +	REC11557			REC31-30894A1
115 High Altitude 6 Jaw Rev. Clutch		1989-93	USA	0C100000 +				REC31-30894A1
115 High Altitude 6 Jaw Rev. Clutch		1989-93	BEL	9559771 +				REC31-30894A1
125 3 Jaw Rev. Clutch	4	1994-98	USA	0D283222 +				REC31-30894A1
125 3 Jaw Rev. Clutch	4	1994-98	BEL	9793577 +				REC31-30894A1
125 High Altitude 3 Jaw Rev. Clutch		1994-98	USA	0D283222 +				REC31-30894A1
125 High Altitude 3 Jaw Rev. Clutch		1994-98	BEL	9793577 +				REC31-30894A1
125 6 Jaw Rev. Clutch	4	1994-98	USA	0D283222 +	REC11557			REC31-30894A1
125 6 Jaw Rev. Clutch	4	1994-98	BEL	9793577 +	REC11557			REC31-30894A1
125 High Altitude 6 Jaw Rev. Clutch		1994-98	USA	0D283222 +				REC31-30894A1
125 High Altitude 6 Jaw Rev. Clutch		1994-98	BEL	9793577 +				REC31-30894A1
V-135 Std. Rotation, 2:1 Ratio,		1986-88	USA	0A904646 - 0G437999				REC31-78172A1
V-135 Counter Rotation,		1989-90	USA	0C100861 - 0G437999				REC31-78172A1
V-135 Std. Rotation, 2:1 Ratio,		1997-04	USA	0G438000 +				REC31-30894A1
V-135 Counter Rotation,		1997-04	USA	0G438000 +				REC31-30894A1
V-135 DFI Std. Rotation, 2:1,		1998-04	USA	0G590000 +				REC31-30894A1
V-150 Std. Rotation, 2:1 Ratio,		1986-88	USA	0A904646 - 0G437999				REC31-78172A1
V-150 Counter Rotation, 2:1,		1989-90	USA	0C100861 - 0G437999				REC31-30894A1
V-150 (XR4, MAG II) Torpedo		1988-91	USA	0C239553 - 04303045				REC31-78172A1
V-150 (XR4, MAG III) Torpedo		1988-91	USA	0D082000 - 0G437999	REC43-44104T2			REC31-78172A1
V-150 EFI Std. Rotation, 1.87:1,		1993-95	USA	0D082000 - 0G437999	REC43-44104T2			REC31-78172A1
V-150 Std. Rotation, 2:1,		1996-98	USA	0G438000 +				REC31-30894A1
V-150 (XR6, MAG III) Std. Rot., 1.87:1,		1996-98	USA	0G438000 +				REC31-30894A1
V-150 EFI Std. Rot., 1.87:1,		1996-98	USA	0G438000 +				REC31-30894A1
V-150 DFI Std. Rot., 1.87:1,		1998	USA	0G590000 +				REC31-30894A1
V-175 Std. Rot		1980-81	USA	5393737 - 6618750	REC11770			REC31-78172A1
V-175 Std. Rot.,		1980-81	AUS	8064250 +	REC11770			REC31-78172A1
V-175 Std. Rot., 1.87:1 Ratio,		1985-88	USA	6618751 - 0G437999	REC43-44104T2			REC31-78172A1
V-175 Counter Rot., 1.87:1 Ratio,		1985-88	USA	6618751 - 0G437999				REC31-78172A1
V-175 EFI Std. Rot., 1.87:1,		1991	USA	0D000750 - 0G437999	REC43-44104T2			REC31-78172A1
V-175 EFI Counter Rot., 1.87:1,		1991	USA	0D082000 - 0G437999				REC31-78172A1
V-175 Std. Rot., 1.87:1,		1996-98	USA	0G438000 +				REC31-30894A1
V-175 Counter Rot., 1.87:1,		1996-98	USA	0G438000 +				REC31-30894A1
V-175 EFI Std. Rot., 1.87:1,		1996-98	USA	0G438000 +				REC31-30894A1
V-175 Counter Rot., 1.87:1,		1996-98	USA	0G438000 +				REC31-30894A1
V-200 Std. Rot.		1978-79	USA	5393737 - 6073191	REC11770			REC31-78172A1
V-200 Std. Rot.		1980-81	AUS	8061595 - 8065672	REC11770			REC31-78172A1
V-200 Std. Rot.		1982-84	USA	6073192 - 6625220				REC31-78172A1
V-200 Std. Rot., 1.87:1,		1985-88	USA	6625221 - 0C291519	REC43-44104T2			REC31-78172A1
V-200 Std. Rot., 1.87:1,		1991	USA	0C291520 - 0G437999	REC43-44104T2			REC31-78172A1
V-200 EFI Std. Rot., 1.87:1,		1989-90	USA	0C100861 - 0C291519	REC43-44104T2			REC31-78172A1
V-200 EFI Std. Rot., 1.87:1,		1991	USA	0C291520 - 0G437999	REC43-44104T2			REC31-78172A1
V-200 EFI Counter Rot., 1.87:1,		1992-95	USA	0D082000 - 0G437999				REC31-78172A1
V-200 DFI Std. Rot., 1.87:1,		1997-04	USA	0G437999				REC31-35928T1
V-200 DFI Std. Rot., 1.75:1,		1997	USA	0G438000 +		REC43-859321A3		REC31-30894A1

HP	Cyl.	AÑO YEAR ANNO	PAÍS COUNTRY PAESE	SERIE SERIAL SERIE	KIT COMPLETO COMPLET GEAR SET KIT COMPLETO	PIÑÓN ATAQUE FORWARD & PINION PIGNONE AVVANTI	MARCHA ATRÁS REVERSE GEAR MARCIA INDIETRA	MARCHA ADELANTE FORWARD BEARING MARCIA AVVANTI
V-200 DFI Counter Rot., 1.75:1,		1997	USA	0G386496 - 0G437999				REC31-35928T1
V-200 Std. Rot., 1.87:1,		1996-98	USA	0G438000 +				REC31-30894A1
V-200 Counter Rot., 1.87:1,		1996-98	USA	0G438000 +				REC31-30894A1
V-200 EFI Std. Rot., 1.87:1,		1996-98	USA	0G438000 +				REC31-30894A1
V-200 Counter Rot., 1.87:1,		1996-98	USA	0G438000 +				REC31-30894A1
V-200 DFI Counter Rot., 1.75:1,		1997	USA	0G438000 +				REC31-30894A1
200 (3.0L) DFI Std. Rot., 1.75:1 Ratio		1998	USA	0G590000 +		REC43-859321A3		REC31-30894A1
200 (3.0L) Std. Rot., 1.75:1 Ratio		1998	USA	0G590000 +		REC43-859321A3		REC31-30894A1
225 (3.0L) DFI Std. Rot., 1.75:1 Ratio		1998	USA	0G590000 +		REC43-859321A3		REC31-30894A1
225 (3.0 Carb) Sea Pro , 1.62:1		1994-98	USA	- 0G437999			REC43-828073A1	REC31-35928T1/ REC31-828439A2
225 (3.0 Carb) Sea Pro , 1.75:1		1994-98	USA	- 0G437999				REC31-35928T1/ REC31-828439A2
V-220 Std. Rot., 1.87:1 Ratio		1987-88	USA	B117316 +	REC43-44104T2			REC31-78172A1
V-225 Std. Rot.,		1980-81	USA	5628028 +				REC31-78172A1
225 (3.0 Carb) Std. Rot., 1.62:1 Ratio		1994-98	USA	0D280813 +			REC43-828073A1	REC31-35928T1/ REC31-828439A2
225 (3.0L) EFI Std. Rot., 1.75:1 Ratio		1995-98	USA	0G129222-0G437999				REC31-30894A1
225 (3.0L) EFI Std. Rot., 1.75:1 Ratio		1995-98	USA	0G438000 +		REC43-859321A3		REC31-30894A1
225 (3.0L) EFI Std. Rot., 1.87:1 Ratio		1995-98	USA	0G438000 +				REC31-30894A1
250 (3.0L) EFI Std. Rot., 1.75:1 Ratio		1995-98	USA	0G129222-0G437999		REC43-859321A3		REC31-30894A1
250 (3.0L) EFI Std. Rot., 1.75:1 Ratio		1995-98	USA	0G438000 +		REC43-859321A3		REC31-30894A1
250 (3.0L) EFI Std. Rot., 1.87:1 Ratio		1995-98	USA	0G438000 +				REC31-30894A1
250 / 275 Std. Rotation		1989-94	USA	C101891 +				REC31-35928T1

TUERCA DE PIÑÓN
PINION NUTS
DADI PIGNONI

Ref.	R.O.
REC11-35921	11-35921
REC313339	11-55910



SELECTORES
CLUTCH DOGS
SELETTORI

Ref.	R.O.	Dientes contrarotación Jaw Reverse Denti Controrotanti
REC52-853594T	52-853594T	6
REC52-822539T	52-822539T	3
REC52-850048T	52-850048T	6
REC52-859340T	52-859340T	6



REC52-853594T



REC52-822539T



REC52-850048T



REC52-859340T

Ref.	R.O.
REC6E5-45631-00	52-96313M

4A (6E0)
5C (6E3)



Ref.	R.O.
REC664-45631-00	52-81644T

20C (Thru Propex)
25C/K (Thru Propex)
28
30a / w30cw/Marathon



Ref.	R.O.
REC682-45631-00	52-84274M

9.9C
15C/K/ (long)
W15



GUÍA SELECTORES
CLUTCH DOGS APPLICATION
GUIDA SELETTORI

4 TIEMPOS STROKES

MODELO MODEL MODELLO	Cyl.	SERIE SERIAL SERIE	REDUCCIÓN 2.31:1 RATIO 2.31:1 RIDUZIONI 2.31:1	REDUCCIÓN 2.33:1 RATIO 2.33:1 RIDUZIONI 2.33:1
30		0P017000-0P153499	REC52-850048T	
30 Carb	3	0P153500-0P400999	REC52-850048T	REC52-850048T
40		9944807-0P153499	REC52-850048T	
40	4	0P094500-0P206999	REC52-850048T	
50		0P017000 +	REC52-850048T	
50	4	0P094500 +	REC52-850048T	
50 EFI	4	0P153500 +	REC52-850048T	REC52-850048T
60	4	0P094500-0P206999	REC52-850048T	
60 EFI	4	0P153500-0P515896		REC52-850048T

2 TIEMPOS / 2 STROKES

GUÍA SELECTORES
CLUTCH DOGS APPLICATION
GUIDA SELETTORI

MODELO MODEL MODELLO	Cyl.	AÑO YEAR ANNO	PAÍS COUNTRY PAESE	SERIE SERIAL SERIE	SELECTOR CLUTCH DOG SELETTORE
50	3	1991-95	USA	0D000750-0G589999	**REC52-850048T**
50	3	1991-95	BEL	9683055-9973099	**REC52-850048T**
55	3	1996	USA	0D000750 +	**REC52-850048T**
55	3	1996	BEL	9741042 +	**REC52-850048T**
60 Standard, Non Bigfoot	3	1991-95	USA	0D000750 +	**REC52-850048T**
60 Standard, Non Bigfoot	3	1991-95	BEL	9683055 +	**REC52-850048T**
60 3 Jaw Rev. Clutch Bigfoot	3	1991-95	USA	0D000750-0G589999	**REC52-822539T**
60 3 Jaw Rev. Clutch Bigfoot	3	1991-95	BEL	9683055-9973099	**REC52-822539T**
60 6 Jaw Rev. Clutch Bigfoot	3	1991-95	USA	0D000750-0G589999	**REC52-850048T**
60 6 Jaw Rev. Clutch Bigfoot	3	1991-95	BEL	9683055-9973099	**REC52-850048T**
60 6 Jaw Rev. Clutch Bigfoot	3	1998	USA	590000 +	**REC52-850048T**
60 6 Jaw Rev. Clutch Bigfoot	3	1998	BEL	9973100 +	**REC52-850048T**
70 3 Jaw Rev. Clutch	3	1987	USA	0A996142-0C221999	**REC52-822539T**
70 3 Jaw Rev. Clutch	3	1987	BEL	9483121-9589038	**REC52-822539T**
70 6 Jaw Rev. Clutch	3	1987	USA	0A996142-0C221999	**REC52-850048T**
70 6 Jaw Rev. Clutch	3	1987	BEL	9483121-9589038	**REC52-850048T**
75 3 Jaw Rev. Clutch	3	1990-93	USA	0A996142 +	**REC52-822539T**
75 3 Jaw Rev. Clutch	3	1990-93	BEL	9483121 +	**REC52-822539T**
75 6 Jaw Rev. Clutch	3	1994-98	USA	0A996142 +	**REC52-850048T**
75 6 Jaw Rev. Clutch	3	1994-98	BEL	9483121 +	**REC52-850048T**
80 3 Jaw Rev. Clutch	3	1987	USA	0A996142-0C221999	**REC52-822539T**
80 3 Jaw Rev. Clutch	3	1987	BEL	9483121-9589038	**REC52-822539T**
80 6 Jaw Rev. Clutch	3	1987	USA	0A996142-0C221999	**REC52-850048T**
80 6 Jaw Rev. Clutch	3	1987	BEL	9483121-9589038	**REC52-850048T**
90 3 Jaw Rev. Clutch	3	1987	USA	0A996142 +	**REC52-822539T**
90 3 Jaw Rev. Clutch	3	1987	BEL	9483121 +	**REC52-822539T**
90 6 Jaw Rev. Clutch	3	1987	USA	0A996142 +	**REC52-850048T**
90 6 Jaw Rev. Clutch		1987	BEL	9483121 +	**REC52-850048T**
100 3 Jaw Rev. Clutch		1988-93	USA	0B209468 +	**REC52-822539T**
100 3 Jaw Rev. Clutch		1988-93	BEL	9523034 +	**REC52-822539T**
100 High Altitude 3 Jaw Rev. Clutch		1988-93	USA	0B209468 +	**REC52-822539T**
100 High Altitude 3 Jaw Rev. Clutch		1988-93	BEL	9523034 +	**REC52-822539T**
100 6 Jaw Rev. Clutch		1988-98	USA	0B209468 +	**REC52-850048T**
100 6 Jaw Rev. Clutch		1988-98	BEL	9523034 +	**REC52-850048T**
100 High Altitude 6 Jaw Rev. Clutch		1988-93	USA	0B209468 +	**REC52-850048T**
100 High Altitude 6 Jaw Rev. Clutch		1988-93	BEL	9523034 +	**REC52-850048T**
115 3 Jaw Rev. Clutch		1988-93	USA	0C100000 +	**REC52-822539T**
115 3 Jaw Rev. Clutch		1988-93	BEL	9559771 +	**REC52-822539T**
115 High Altitude 3 Jaw Rev. Clutch		1989-93	USA	0C100000 +	**REC52-822539T**
115 High Altitude 3 Jaw Rev. Clutch		1989-93	BEL	9559771 +	**REC52-822539T**
115 6 Jaw Rev. Clutch		1989-93	USA	0C100000 +	**REC52-850048T**
115 6 Jaw Rev. Clutch		1989-93	BEL	9559771 +	**REC52-850048T**
115 High Altitude 6 Jaw Rev. Clutch		1989-93	USA	0C100000 +	**REC52-850048T**
115 High Altitude 6 Jaw Rev. Clutch		1989-93	BEL	9559771 +	**REC52-850048T**
125 3 Jaw Rev. Clutch		1994-98	USA	0D283222 +	**REC52-822539T**
125 3 Jaw Rev. Clutch		1994-98	BEL	9793577 +	**REC52-822539T**
125 High Altitude 3 Jaw Rev. Clutch		1994-98	USA	0D283222 +	**REC52-822539T**
125 High Altitude 3 Jaw Rev. Clutch		1994-98	BEL	9793577 +	**REC52-822539T**
125 6 Jaw Rev. Clutch		1994-98	USA	0D283222 +	**REC52-850048T**
125 6 Jaw Rev. Clutch		1994-98	BEL	9793577 +	**REC52-850048T**
125 High Altitude 6 Jaw Rev. Clutch		1994-98	USA	0D283222 +	**REC52-850048T**
125 High Altitude 6 Jaw Rev. Clutch		1994-98	BEL	9793577 +	**REC52-850048T**
V-135 Std. Rotation, 2:1 Ratio, Non-Ratching		1997-04	USA	0G438000 +	**REC52-859340T**
V-135 Counter Rotation, Non-Ratching		1997-04	USA	0G438000 +	**REC52-859340T**
V-135 DFI Std. Rotation, 2:1, Non-Ratching		1998-04	USA	0G590000 +	**REC52-859340T**
V-135 DFI Counter Rotation, Non-Ratching		1998-04	USA	0G590000 +	**REC52-859340T**
V-150 (XR4, MAG II) w/ 4-1/4 Dia. Torpedo		1988-91	USA	0C239553-04303045	**REC52-822539T**
V-150 Std. Rotation, 2:1, Non-Ratching		1996-98	USA	0G438000 +	**REC52-859340T**
V-150 Counter Rotation, Non-Ratching		1996-98	USA	0G438000 +	**REC52-859340T**
V-150 (XR6, MAG III) Std. Rot., 1.87:1, Non-Ratching		1996-98	USA	0G438000 +	**REC52-859340T**
V-150 EFI Std. Rot., 1.87:1, Non-Ratching		1996-98	USA	0G438000 +	**REC52-859340T**
V-150 EFI Counter Rot., 1.87:1, Non-Ratching		1996-98	USA	0G438000 +	**REC52-859340T**
V-150 DFI Std. Rot., 1.87:1, Non-Ratching		1998	USA	0G590000 +	**REC52-859340T**
V-150 DFI Counter Rot., 1.87:1, Non-Ratching		1998	USA	0G590000 +	**REC52-859340T**
V-175 Counter Rot., 1.87:1, Non-Ratching		1996-98	USA	0G438000 +	**REC52-859340T**
V-175 EFI Std. Rot., 1.87:1, Non-Ratching		1996-98	USA	0G438000 +	**REC52-859340T**
V-175 Counter Rot., 1.87:1, Non-Ratching		1996-98	USA	0G438000 +	**REC52-859340T**
V-200 DFI Std. Rot., 1.75:1, Non-Ratching		1997	USA	0G438000 +	**REC52-859340T**
V-200 Std. Rot., 1.87:1, Non-Ratching		1996-98	USA	0G438000 +	**REC52-859340T**
V-200 Counter Rot., 1.87:1, Non-Ratching		1996-98	USA	0G438000 +	**REC52-859340T**
V-200 EFI Std. Rot., 1.87:1, Non-Ratching		1996-98	USA	0G438000 +	**REC52-859340T**

MODELO MODEL MODELLO	Cyl.	AÑO YEAR ANNO	PAÍS COUNTRY PAESE	SERIE SERIAL SERIE	SELECTOR CLUTCH DOG SELETTORE
V-200 Counter Rot., 1.87:1, Non-Ratching		1996-98	USA	0G438000 +	**REC52-859340T**
V-200 DFI Counter Rot., 1.75:1, Non-Ratching		1997	USA	0G438000 +	**REC52-859340T**
200 (3.0L) DFI Std. Rot., 1.75:1 Ratio		1998	USA	0G590000 +	**REC52-853594T**
200 (3.0L) Std. Rot., 1.75:1 Ratio		1998	USA	0G590000 +	**REC52-853594T**
225 (3.0L) DFI Std. Rot., 1.75:1 Ratio		1998	USA	0G590000 +	**REC52-853594T**
225 (3.0 Carb) Sea Pro Std. Rot., 1.62:1		1994-98	USA	- 0G437999	**REC52-853594T**
225 (3.0 Carb) Sea Pro Std. Rot., 1.75:1		1994-98	USA	- 0G437999	**REC52-853594T**
V-220 Std. Rot., 1.87:1 Ratio		1987-88	USA	B117316 +	**REC52-853594T**
V-225 Std. Rot., w/ pre-load pin in drive shaft		1980-81	USA	5628028 +	**REC52-853594T**
225 (3.0 Carb) Std. Rot., 1.62:1 Ratio		1994-98	USA	0D280813 +	**REC52-853594T**
225 (3.0L) EFI Std. Rot., 1.75:1 Ratio		1995-98	USA	0G129222-0G437999	**REC52-853594T**
225 (3.0L) EFI Std. Rot., 1.75:1 Ratio		1995-98	USA	0G438000 +	**REC52-853594T**
225 (3.0L) EFI Std. Rot., 1.87:1 Ratio		1995-98	USA	0G438000 +	**REC52-853594T**
250 (3.0L) EFI Std. Rot., 1.75:1 Ratio		1995-98	USA	0G129222-0G437999	**REC52-853594T**
250 (3.0L) EFI Std. Rot., 1.75:1 Ratio		1995-98	USA	0G438000 +	**REC52-853594T**
250 (3.0L) EFI Std. Rot., 1.87:1 Ratio		1995-98	USA	0G438000 +	**REC52-853594T**
250 / 275 Std. Rotation		1989-94	USA	C101891 +	**REC52-853594T**

EJES HÉLICE
PROP SHAFTS
ASSE ELICHE

REF	RO. OEM	HP	DESCRIPCIÓN DESCRIPTION DESCRIZIONE	LONGITUD LENGTH LUNGHEZZA	Ø CAÑA CARRIER NEEDLE BEARING JOURNAL Ø Ø GAMBO	ESTRIAS SPLINES DENTI	TOPE HÉLICE PROP THRUST WASHER PUNTO ELICA
REC44-824110	44-824110	V6	Cola moderna V6 (3.0L) Late Gearcase V6 (3.0L) Piede moderna V6 (3.0L)	15 - 1/2" 39,37 cm	1 - 3/16" 3,016 cm	15	**REC12-31211Q01**
REC44-94148	44-94148	V6	Cola Alpha moderna. **NO MONTAR EN EMBARCACIONES DE COMPETICIÓN** Late Alpha Gearcase. **DON'T USE ON BASS TORNAMENT BOAT ENGINES** Piede Alpha moderno. **NON MONTARE SU IMBARCAZIONI DA COMPETIZIONE**	15 - 1/2" 39,37 cm	1 - 3/16" 3,016 cm	15	**REC12-31211Q01**
	44-93003	L4, L6, V6	Cola 6 en línea antigua Early Inline 6 Gearcase Piede 6 in línea vecchio	15 - 1/4" 38,73 cm	1 - 3/16" 3,016 cm	15	**REC12-31211Q01**
REC44-12238T	44-12238T	L4, V6, XR4, XRG (3 cyl)	Modelo moderno Late Gearcase Modello moderno	15 - 1/2" 39,37 cm	1 - 3/16" 3,016 cm	15	**REC13191Q01**
REC44-850308	44-850308	(3 - 4 cyl)	Modelo moderno Late Gearcase Modello moderno	15 - 1/2" 39,37 cm	1 - 3/16" 3,016 cm	15	**REC13191Q01**
	44-75365	(2, 3, 4 Cyl)	Cola pequeña Small Gearcase Piede piccola	12 - 1/2" 39,37 cm	7/8" 2,22 cm	13	**REC73345A1**

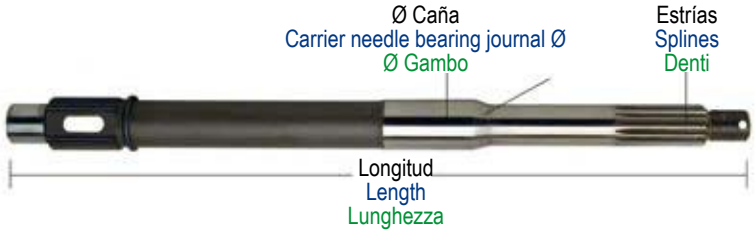

Tope hélice
Prop Thrust washer
Punta elica



KITS REPARACIÓN BOMBA AGUA
WATER PUMP SERVICE KITS
KIT RICAMBI POMPA ACQUA

Ref.	R.O.
REC46-70941A3	46-70941A3

MOTORES / ENGINES / MOTORI
(1975-85)
4, 4.5, 7.5, 9.8 HP



Ref.	R.O.
REC47-89981Q1	47-89981T2

MOTORES / ENGINES / MOTORI
4 - 9.8 HP
Ø interior impulsor 0.456
Impeller Int. Ø 0.456
Ø Interno girante 0.456



Ref.	R.O.
REC46-42040T5	46-42040A5

MOTORES / ENGINES / MOTORI
6 -15 HP
(2 & 4 Tiempos / 2 & 4 Strokes / 2 & 4 Tempi)



Ref.	R.O.
REC46-99157T2	46-99157T2

MOTORES / ENGINES / MOTORI
(1984+)
15XD, 18XD, 20XD, 25XD, 25 HP (3 cyl)
8- 25 HP
(2 & 4 Tiempos / 2 & 4 Strokes / 2 & 4 Tempi)



Ref.	R.O.
REC47-85089Q4	47-85089T7

MOTORES / ENGINES / MOTORI
18 - 25 HP



Ref.	R.O.
REC47-89982T1	47-89982T1

MOTORES / ENGINES / MOTORI
20 HP



Ref.	R.O.
REC821354A2	821354A2

MOTORES / ENGINES / MOTORI
25 - 50 HP
(2 & 4 Tiempos / 2 & 4 Strokes / 2 & 4 Tempi)



Ref.	R.O.
REC43055A4	43055A4

MOTORES / ENGINES / MOTORI
30 - 125 HP
(2 & 4 Tiempos / 2 & 4 Strokes / 2 & 4 Tempi)



Ref.	R.O.
REC47-89983Q1	47-89983T2

MOTORES / ENGINES / MOTORI
35 - 60 HP

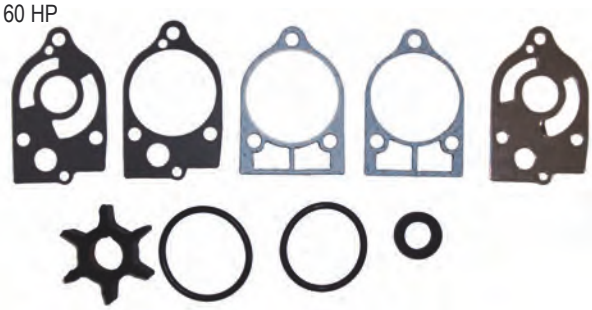

Ref.	R.O.
REC46-812966A12	46-812966A12

MOTORES / ENGINES / MOTORI
(1991+)
40, 50, 60 EFI HP
30 - 60 HP (4 Tiempos / 4 Strokes / 4 Tempi)
Formula 60



Ref.	R.O.
REC47-89984Q5	47-89984T6

MOTORES / ENGINES / MOTORI
V6

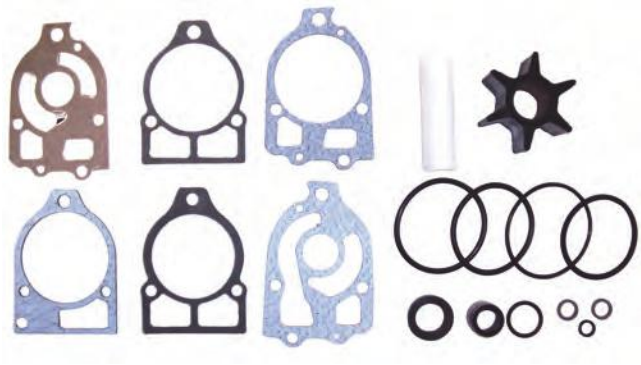

Ref.	R.O.
REC47-89980T1	47-89980T1

MOTORES / ENGINES / MOTORI
Ø interior impulsor 0.438
Impeller Int. Ø 0.438
Ø Interno girante 0.438



Ref.	R.O.
REC47-43026Q06	47-43026T11, T8

MOTORES / ENGINES / MOTORI
300 HP
(2 & 4 Tiempos / 2 & 4 Strokes / 2 & 4 Tempi)



Ref.	R.O.
REC47-42038Q3	47-42038T4



Ref.	R.O.
REC47-19453QZ	47-19453Q2

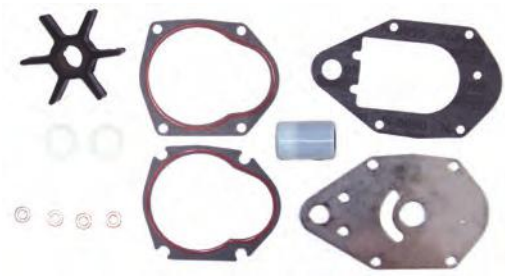

Ref.	R.O.
REC46-60367A1	46-60367A1, 46-96148A8

MOTORES / ENGINES / MOTORI
V-115 - V-200 (2.5L) (EFI/DFI)



Ref.	R.O.
REC46-60366T1	46-60366T1, 46-60366Q1



Ref.	R.O.
REC46-42089A5	46-42089A5

MOTORES / ENGINES / MOTORI
6 - 15 HP
(2 & 4 Tiempos / 2 & 4 Strokes / 2 & 4 Tempi)



Ref.	R.O.
REC46-77177A3	46-77177A3

MOTORES / ENGINES / MOTORI
30 - 70 HP

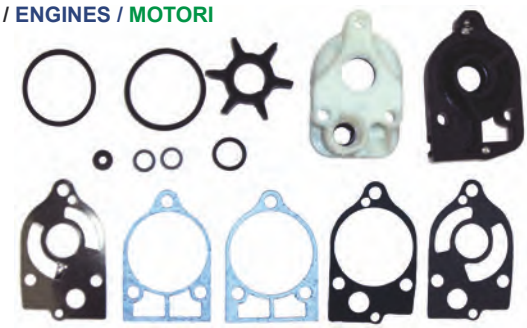

Ref.	R.O.
REC46-73640A2	46-73640A2

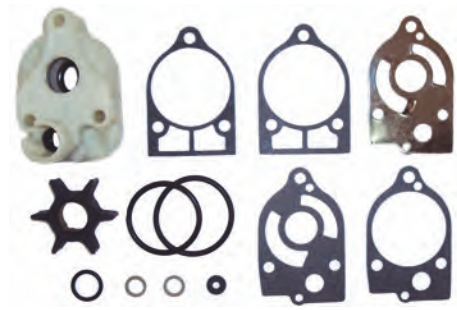

Ref.	R.O.
REC46-812966A11	46-812966A11

MOTORES / ENGINES / MOTORI
40 / 45 JET
40 - 60 HP
(2 & 4 Tiempos / 2 & 4 Strokes / 2 & 4 Tempi)



Ref.	R.O.
REC12094	46-43024A7

MOTORES / ENGINES / MOTORI
40 - 125 HP
(2 & 4 Tiempos / 2 & 4 Strokes / 2 & 4 Tempi)



Ref.	R.O.
REC46-96148A8	46-96148A8

MOTORES / ENGINES / MOTORI
75 - 200 HP
XR-6
(V-Models)

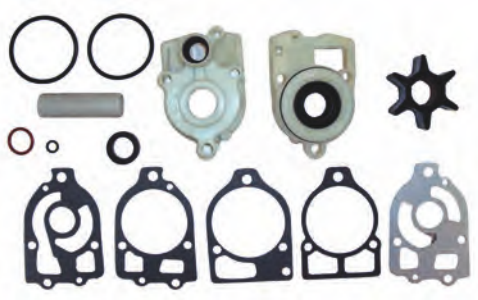

Ref.	R.O.
REC817275A09	817275A09

MOTORES / ENGINES / MOTORI
(2005+)
135, 150, 175, 200, 225, 250, 275 HP Verado
200 / 225 / 250 / 300 (DFI) (3.0L)



Ref.	R.O.
REC817275A6	817275A6

MOTORES / ENGINES / MOTORI
200 DFI
225 (3.0L Carb) EFI (SeaPro)
250 (3.0L EFI)



CUERPOS BOMBA
WATER PUMP HOUSING
CORPI POMPA

Ref.	R.O.
REC46-96148T1	46-96148T1

MOTORES / ENGINES / MOTORI
110 - 140 Jet
V-115 - V-200
XR-6



Ref.	R.O.
REC46-77822A1	46-77822A1

MOTORES / ENGINES / MOTORI
30 Jet
35 / 40 / 402 (2 cyl)
50 / 60 / 70 (3 cyl)
45 / 50 / 500 (4 cyl)



Ref.	R.O.
REC46-42089A2	46-42089A2

MOTORES / ENGINES / MOTORI
6 - 15 HP
(2 & 4 Tiempos / 2 & 4 Strokes / 2 & 4 Tempi)



Ref.	R.O.
REC93224A1	93224A1

MOTORES / ENGINES / MOTORI
4 / 4.5 / 39 / 40 (1 cyl)
7.5 / 9.8 HP



Ref.	R.O.
PAF8-04000009	803752A02

MOTORES / ENGINES / MOTORI
8 & 9.9
(4 Tiempos / 4 Strokes / 4 Tempi)
(209 cc)



Ref.	R.O.
REC46-99157A02	46-99157A02

MOTORES / ENGINES / MOTORI
8 / 9.9 / 13.5 / 15 (4 Tiempos / 4 Strokes / 4 Tempi)
18 / 20 / 25 (2 Tiempos / 4 Strokes / 4 Tempi)



KITS CUERPOS BOMBA
WATER PUMP HOUSING KITS
KIT CORPI POMPA

Ref.	R.O.
REC817275A1	817275A1

MOTORES / ENGINES / MOTORI
200 - 400 HP
(2 & 4 Tiempos / 2 & 4 Strokes / 2 & 4 Tempi)



Ref.	R.O.
REC817275A2	817275A2

MOTORES / ENGINES / MOTORI
40 - 250 HP
3.0L EFI / SeaPro
(2 & 4 Tiempos / 2 & 4 Strokes / 2 & 4 Tempi)

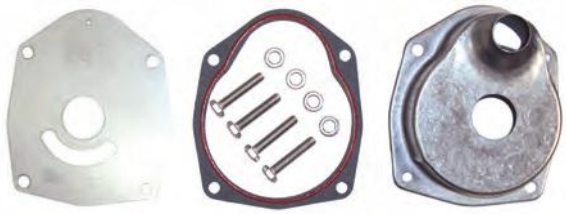

Ref.	R.O.
REC14334A3	14334A3

MOTORES / ENGINES / MOTORI
30 - 60 HP
Formula 60
(2 & 4 Tiempos / 2 & 4 Strokes / 2 & 4 Tempi)



ACOPLES INOX.
PUMP CAPS
COPERCHIO INOX

Ref.	R.O.
REC48752T	48752
REC48753	48753
REC70977T	70977
REC16157	16157



REC48752T



REC48753



REC70977T



REC16157

Ref.	R.O.
PAF8-04000010	8037511

MOTORES / ENGINES / MOTORI
6 / 8 / 9.8 (2 T / 2 Strokes / 2 Tempi) (Inter.)
(SeaPro)
8 & 9.9 (209 cc) (4 T / 4 Strokes / 4 Tempi)



TAPA BOMBA AGUA
WATER PUMP PLATE
PIASTRA POMPA ACQUA

Ref.	R.O.
REC46895	46895

MOTORES / ENGINES / MOTORI
4 / 4.5 / 40 / 45 HP (1 cyl)
7.5 / 75 / 60 / 9.8 HP
110 HP



Ref.	R.O.
REC16159	16159

MOTORES / ENGINES / MOTORI
4 / 5 (2 Tiempos / 2 Strokes / 2 Tempi)
4 / 5 / 6 (4 Tiempos / 4 Strokes / 4 Tempi)



Ref.	R.O.
PAF8-04000007	8037531

MOTORES / ENGINES / MOTORI
6 / 8 / 9.8 (2 Tiempos / 2 Strokes / 2 Tempi)
8 & 9.9 (4 Tiempos / 4 Strokes / 4 Tempi) (209 cc)



Ref.	R.O.
REC42200	42200

MOTORES / ENGINES / MOTORI
6 - 15 HP
(2 & 4 Tiempos / 2 & 4 Strokes / 2 & 4 Tempi)



Ref.	R.O.
REC85083	85083

MOTORES / ENGINES / MOTORI
8 - 25 HP
(2 & 4 Tiempos / 2 & 4 Strokes / 2 & 4 Tempi)



Ref.	R.O.
REC8213542	821354-2

MOTORES / ENGINES / MOTORI
25 - 50 HP
(2 & 4 Tiempos / 2 & 4 Strokes / 2 & 4 Tempi)



Ref.	R.O.
REC19700A2	19700A2

MOTORES / ENGINES / MOTORI
30 - 60 HP
(2 & 4 Tiempos / 2 & 4 Strokes / 2 & 4 Tempi)



Ref.	R.O.
REC8172761	817276-1

MOTORES / ENGINES / MOTORI
100 - 350 HP
(2 & 4 Tiempos / 2 & 4 Strokes / 2 & 4 Tempi)



Ref.	R.O.
REC324351	32435

MOTORES / ENGINES / MOTORI
110 - 140 Jet
150 - 175 ProXs(2.5L)
V-135 - V-200 HP
XR-6



Ref.	R.O.
REC32768	54705

MOTORES / ENGINES / MOTORI
350 / 500
400 (2 Cyl)
450 (4 Cyl)



BASES BOMBA AGUA
WATER PUMP BASE ASSEMBLY
BASE POMPA ACQUA

Ref.	R.O.
REC46-70941T01	46-70941A1

MOTORES / ENGINES / MOTORI
3.9 - 9.8 HP
(2 Tiempos / 2 Strokes / 2 Tempi)



Ref.	R.O.
REC46-821307A2	46-821307A2

MOTORES / ENGINES / MOTORI
25 - 50 HP
(2 & 4 Tiempos / 2 & 4 Strokes / 2 & 4 Tempi)



Ref.	R.O.
REC46-77177A1	46-77177A1

MOTORES / ENGINES / MOTORI
30 Jet
35 - 70 HP



Ref.	R.O.
REC46-812966A7	46-812966A7

MOTORES / ENGINES / MOTORI
30 - 60 HP
(2 & 4 Tiempos / 2 & 4 Strokes / 2 & 4 Tempi)



Ref.	R.O.
REC46-8M0077147	46-42579A3

MOTORES / ENGINES / MOTORI
105- 1470 Jet / 150-175 ProXS
V-135 - V-220 (DFI/EFI) (2.5L)
XR-4 / XR-6



Ref.	R.O.
REC46-96146A6	46-96146A6

MOTORES / ENGINES / MOTORI
V-150 - V-225
(Work /XR-2 / Marathon)
2.4L (EFI) Race Outboard



Ref.	R.O.
REC8M0007131	888909A1

MOTORES / ENGINES / MOTORI
135 - 300 HP
(Verado 4 T / 4 Strokes / 4 Tempi)
200 - 250 HP (DFI 2 T / 2 Strokes / 2 Tempi)



Ref.	R.O.
REC807929A1	807929A1

MOTORES / ENGINES / MOTORI
200 - 300 HP (DFI / EFI / Carb) (3.0L)



Ref.	R.O.
REC46-73640A1	46-73640A1

MOTORES / ENGINES / MOTORI
402
500 / 50
70/ 650 (3 Cyl)



KITS BASES BOMBA AGUA
WATER PUMP BASE ASSEMBLY KIT
KIT BASE POMPA ACQUA

Ref.	R.O.
REC39580	

MOTORES / ENGINES / MOTORI
35 - 60 HP

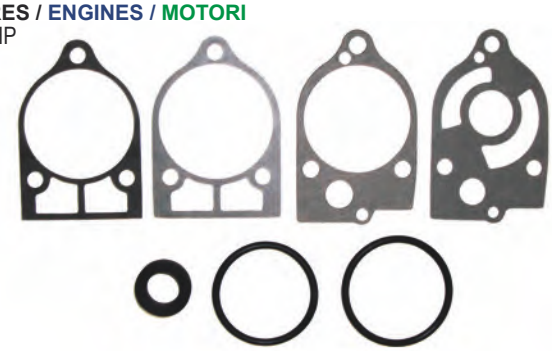

CASQUILLO
SLINGER
BOCCOLA

Ref.	R.O.
REC25-20273	25-20273
REC25-86203	25-86203
REC25-30271	25-30271



JUNTAS BOMBA
WATER PUMP GASKETS
GUARNIZIONI POMPA

Ref.	R.O.
PAF8-04000006	161586

MOTORES / ENGINES / MOTORI
6 / 8 / 9.8 (2 T / 2 Strokes / 2 Tempi)
8 / 9.9 (4 T / 4 Strokes / 4 Tempi)



Ref.	R.O.
PAF8-04000005	161587

MOTORES / ENGINES / MOTORI
6 / 8 / 9.8 (2 T / 2 Strokes / 2 Tempi)
8 / 9.9 (4 T / 4 Strokes / 4 Tempi)



Ref.	R.O.
REC27-19202001	27-19202

MOTORES / ENGINES / MOTORI
6 - 15 HP (1999-06)



Ref.	R.O.
REC27-192043	27-19202

MOTORES / ENGINES / MOTORI
6 - 25 HP (1986-05)



Ref.	R.O.
REC27-85087	27-85087

MOTORES / ENGINES / MOTORI
18/25 HP



Ref.	R.O.
REC27-39626	27-39626

MOTORES / ENGINES / MOTORI
20 / 200

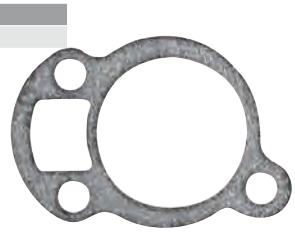

Ref.	R.O.
REC27-396231	27-39623

MOTORES / ENGINES / MOTORI
20 / 200



Ref.	R.O.
REC27-993261	27-99326-1

MOTORES / ENGINES / MOTORI
200/18 / 20 / 25



Ref.	R.O.
REC27-39625	27-39625

MOTORES / ENGINES / MOTORI
20 / 200



Ref.	R.O.
REC27-822189	27-822189

MOTORES / ENGINES / MOTORI
25 - 50 HP
(2 & 4 Tiempos / 2 & 4 Strokes / 2 & 4 Tempi)

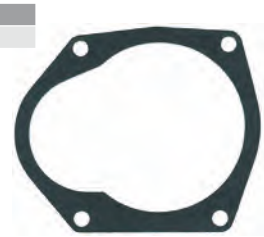

Ref.	R.O.
REC27-822217	27-822217

MOTORES / ENGINES / MOTORI
25 - 50 HP
(2 & 4 Tiempos / 2 & 4 Strokes / 2 & 4 Tempi)



Ref.	R.O.
REC27-19553	27-19553

MOTORES / ENGINES / MOTORI
30 - 45 HP (1987-97)



Ref.	R.O.
REC27-430472	27-43047-2

MOTORES / ENGINES / MOTORI
30-125 HP



Ref.	R.O.
REC27-430331	27-43033-1

MOTORES / ENGINES / MOTORI
30 HP +



Ref.	R.O.
REC27-19551	27-19551

MOTORES / ENGINES / MOTORI
30-60 HP (1987-97)



Ref.	R.O.
REC27-19552	19552

MOTORES / ENGINES / MOTORI
30 Jet
35
40 / 45 (4cyl)

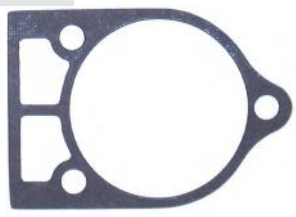

Ref.	R.O.
REC27-8172771	27-43034-1

MOTORES / ENGINES / MOTORI
40-125 HP



Ref.	R.O.
REC27-8M4502052	27-8M4502052

MOTORES / ENGINES / MOTORI
40 - 60 HP (4 T / 4 Strokes / 4 Tempi)
50 - 60 HP (2 T / 2 Strokes / 2 Tempi)



Ref.	R.O.
REC27-32771	27-32771

MOTORES / ENGINES / MOTORI
40 - 350 (1970-79)

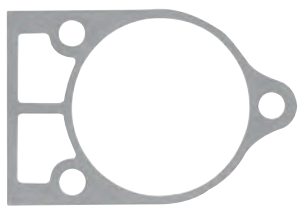

Ref.	R.O.
REC27-32438	27-32438

MOTORES / ENGINES / MOTORI
65-150 HP (1970-85)

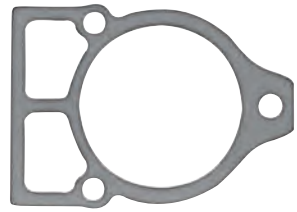

Ref.	R.O.
REC27-426311	27-42631-1

MOTORES / ENGINES / MOTORI
105 / 140 JET V-150
175 PROXS (2.5 L) V-175
V-115 DFI (2.5L) V-200
V-135 XR-4 / XR-6
V-140



Ref.	R.O.
REC27-856081	27-85608-1

MOTORES / ENGINES / MOTORI
V-115 - V-200



Ref.	R.O.
REC27-858524	27-858524

MOTORES / ENGINES / MOTORI
V-115 - V-200



Ref.	R.O.
REC27-856704	27-85610-1

MOTORES / ENGINES / MOTORI
RM/MR (1983-90)



IMPULSORES
IMPELLERS
GIRANTI

MODELO MODEL MODELLO	REF. RECMAR	REF. CEF	MEDIDAS (mm) DIMENSIONS (mm) DIMENSIONI (mm)		
			Ø A	B	C
Aplicaciones por modelo revisar "GUÍA BOMBAS DE AGUA" Applications per model review "GUIA WATER PUMPS" Applicazioni per ciascun modello di revisione "GUIDA POMPE ACQUA"	**REC6G1-44352-00**	CEF500302	11,90	40	18
	REC47-22748	CEF500309	11,60	32	14,40
	REC6L5-44352-00	CEF500322	10,00	36	14,50
	REC6H3-44352-00	CEF500316	19,05	51,80	19,50
	REC682-44352-01	CEF500320	13,00	40	22
	REC689-44352-02	CEF500326	16,15	69,50	12,80
	REC47-89980	CEF500314	11,00	32	14,35
	REC47-89982	CEF500311G	16,00	51	19,05
	REC47-89983T	CEF500312	19,00	61,80	19,05
	REC47-89984T4	CEF500313G	22,20	60	38,80
	REC662-44352-01	CEF500321	14,00	40	22
	REC6E0-44352-00	CEF500325	11,00	40	12,60
	REC47-89981	CEF500310	11,60	32	14,40
	REC47-20813		16,00	39	22,50
	REC47-803630T		21,00	57	30

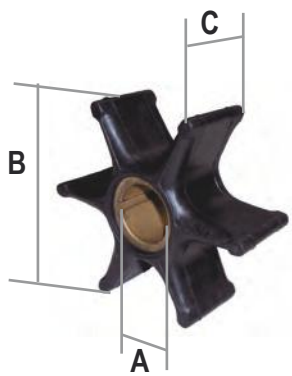

4 STROKES TIEMPOS

IMPULSORES
IMPELLERS
GIRANTI

MODELO MODEL MODELLO	SERIE SERIAL SERIE	TIPO TYPE TIPO	REF. RECMAR	REF. CEF	MEDIDAS (mm) DIMENSIONS (mm) DIMENSIONI (mm)		
					Ø A	B	C
2/2.5/3.5 (Carb)	0R131842 +		**REC47-161543**	CEF500377	10,25	33,6	14,2
4/5/6	0P073456 +		**REC47-161543**	CEF500377	10,25	33,6	14,2
8	0P325500 +	NON BIG FOOT	**REC3B2-65021-1**	CEF500344	12,10	40,00	18,00
8 (Bodensee)(Intern)	0P086824 - 0P400999	BIG FOOT	**REC47-8508910**	CEF500315	16	73	12,6
8 (Bodensee)(Intern)	0P086824 - 0P400999	NON BIG FOOT	**REC47-420382**	CEF500318	13	58,8	11,7
9.9 (209cc)	0P325500 +	NON BIG FOOT	**REC3B2-65021-1**	CEF500344	12,10	40,00	18,00
9.9 (323cc)	0P075166 - 0P400999	BIG FOOT	**REC47-8508910**	CEF500315	16	73	12,6
9.9 (323cc)	0P075166 - 0P400999	NON BIG FOOT	**REC47-420382**	CEF500318	13	58,8	11,7
13.5 (International)	0P134638 +	BIG FOOT	**REC47-8508910**	CEF500315	16	73	12,6
13.5 (International)	0P134638 +	NON BIG FOOT	**REC47-420382**	CEF500318	13	58,8	11,7
15	0P9973100 +	BIG FOOT	**REC47-8508910**	CEF500315	16	73	12,6
15	0P9973100 +	NON BIG FOOT	**REC47-420382**	CEF500318	13	58,8	11,7
25	9973100 - 0P388282		**REC47-8508910**	CEF500315	16	73	12,6
30	0P017000 - 0P153499	2.31:1	**REC47-43026Q02**	CEF500301	22,4	89	32,5
30	0P017000 - 0P153499	02:01	**REC47-8508910**	CEF500315	16	73	12,6
30 Carb (3Cyl)	0P153500 - 0P400999		**REC47-43026Q02**	CEF500301	22,4	89	32,5
30 EFI (3Cyl)	0P153500 - 0P400999		**REC47-8508910**	CEF500315	16	73	12,6
40	9944807 - 0P153499	2.31:1	**REC47-43026Q02**	CEF500301	22,4	89	32,5
40	9944807 - 0P153499	02:01	**REC47-8508910**	CEF500315	16	73	12,6
40 Carb (3Cyl)	0P153500 +	DRIVE SHAFT L	**REC47-19453T**	CEF500378	19,25	78,2	25,15
40 Carb (3Cyl)	0P153500 +	DRIVE SHAFT S	**REC47-8508910**	CEF500315	16	73	12,6
40 (4Cyl)	0P094500 - 0P206999	1.83:1	**REC47-19453T**	CEF500378	19,25	78,2	25,15
40 (4Cyl)	0P094500 - 0P206999	2.31:1	**REC47-43026Q02**	CEF500301	22,4	89	32,5
40 EFI (3Cyl)	0P401000 - 0P400999		**REC47-8508910**	CEF500315	16	73	12,6
40 EFI (4Cyl)	0P153500 +	1.83:1	**REC47-19453T**	CEF500378	19,25	78,2	25,15
40 EFI (4Cyl)	1C033811	2.33:1	**REC47-43026Q02**	CEF500301	22,4	89	32,5
40 ITALY	0P017000 - 0P094499	BIG FOOT	**REC47-43026Q02**	CEF500301	22,4	89	32,5
40 ITALY	0P017000 - 0P094499	NON BIG FOOT	**REC47-8508910**	CEF500315	16	73	12,6
45 Bodensee	0P017000 +	2.31:1	**REC47-43026Q02**	CEF500301	22,4	89	32,5
45 Bodensee	0P017000 +	1.83:1 / 2:1	**REC47-8508910**	CEF500315	16	73	12,6
50 & BIGFOOT	9944807 - 0P094499	2.31:1	**REC47-43026Q02**	CEF500301	22,4	89	32,5
50 & BIGFOOT	9944807 - 0P094499	1.83:1 / 2:1	**REC47-8508910**	CEF500315	16	73	12,6
50 EFI (4Cyl)	0P153500 +	1.83:1	**REC47-19453T**	CEF500378	19,25	78,2	25,15
50 EFI (4Cyl)	0P153500 +	2.33:1/2.31:1	**REC47-43026Q02**	CEF500301	22,4	89	32,5
50	0P094500 - 0P206999	1.83:1	**REC47-19453T**	CEF500378	19,25	78,2	25,15
50	0P094500 - 0P206999	2.31:1	**REC47-43026Q02**	CEF500301	22,4	89	32,5
60 (4Cyl)	0P094500 - 0P206999	1.83:1	**REC47-19453T**	CEF500378	19,25	78,2	25,15
60 (4Cyl)	0P094500 - 0P206999	2.31:1	**REC47-43026Q02**	CEF500301	22,4	89	32,5
60 EFI (4Cyl)	0P153500 +	2.33:1/2.31:1	**REC47-43026Q02**	CEF500301	22,4	89	32,5
60 EFI (4Cyl)	0P153500 +	1.83:1	**REC47-19453T**	CEF500378	19,25	78,2	25,15
80 EFI	0P459572 +		**REC47-43026Q02**	CEF500301	22,4	89	32,5
100 EFI	0P459572 +		**REC47-43026Q02**	CEF500301	22,4	89	32,5
115 EFI	0T178500 +		**REC47-43026Q02**	CEF500301	22,4	89	32,5
135/150/175/200 VERADO (4Cyl)	0P419487 +		**REC47-43026Q02**	CEF500301	22,4	89	32,5
200/225/250/275/300 VERADO (6Cyl)	0P409357 +		**REC47-43026Q02**	CEF500301	22,4	89	32,5

4 STROKES TIEMPOS

GUÍA BOMBAS AGUA
WATER PUMP GUIDE
GUIDA POMPA ACQUA

MODELO MODEL MODELLO	AÑO YEAR ANNO	PAÍS COUNTRY PAESE	SERIE SERIAL SERIE	KIT BOMBA PUMP KIT KIT POMPA	KIT SUP. UPPER KIT KIT SUP.	BASE BASE BASE 	IMPULSOR IMPELLER GIRANTE 	KIT IMPULSOR IMPELLER KIT KIT GIRANTE	CUERPO HOUSING CORPO 	TAPA WEAR PLATE COPERCHIO 
8 (232cc)	1995-98	USA	0G760300-0T178499	REC46-42089A5		REC46-42040T5	REC47-420382	REC47-42038Q3	REC46-42089A2	REC42200
8 (232cc)		USA	0H017100-0H017349	REC46-42089A5		REC46-42040T5	REC47-420382	REC47-42038Q3	REC46-42089A2	REC42200
8 (323cc) Standard		BEL	0P075166-0P325499	REC46-42089A5		REC46-42040T5	REC47-420382	REC47-42038Q3	REC46-42089A2	REC42200
9.9 (232cc)	1995-98	USA	0H000058-0H016909	REC46-42089A5		REC46-42040T5	REC47-420382	REC47-42038Q3	REC46-42089A2	REC42200
9.9 (323cc) Standard		USA	0G760300-0T979999	REC46-42089A5		REC46-42040T5	REC47-420382	REC47-42038Q3	REC46-42089A2	REC42200
9.9 (323cc) Standard		BEL	0P075166-0P325499	REC46-42089A5		REC46-42040T5	REC47-420382	REC47-42038Q3	REC46-42089A2	REC42200
9.9 (323cc) Bigfoot		USA	0G760300-0T979999		REC46-99157T2		REC47-8508910		REC46-99157T2	REC85083
9.9 (323cc) Bigfoot		BEL	0P075166-0P325499		REC46-99157T2		REC47-8508910		REC46-99157T2	REC85083
15 (323cc) Standard	1998	USA	0G590000 +	REC46-42089A5		REC46-42040T5	REC47-420382	REC47-42038Q3	REC46-42089A2	REC42200
15 (323cc) Standard		BEL	9973100 +	REC46-42089A5		REC46-42040T5	REC47-420382	REC47-42038Q3	REC46-42089A2	REC42200
15 (323cc) Bigfoot	1998	USA	0G590000 +		REC46-99157T2		REC47-8508910		REC46-99157T2	REC85083
15 (323cc) Bigfoot		BEL	9973100 +		REC46-99157T2		REC47-8508910		REC46-99157T2	REC85083
25 Carb.	1998	USA	0G590000-0T408999			REC46-821307A2	REC47-8508910	REC821354A2		REC8213542
25 Carb.		BEL	9973100-0P153499			REC46-821307A2	REC47-8508910	REC821354A2		REC8213542
25 Carb.	1998	USA	0T409000 +			REC46-821307A2	REC47-8508910	REC821354A2		REC8213542
25 Carb.		BEL	0P153500 +			REC46-821307A2	REC47-8508910	REC821354A2		REC8213542

MODELO MODEL MODELLO	AÑO YEAR ANNO	PAÍS COUNTRY PAESE	SERIE SERIAL SERIE	KIT BOMBA PUMP KIT KIT POMPA	KIT SUP. UPPER KIT KIT SUP.	BASE BASE BASE 	IMPULSOR IMPELLER GIRANTE 	KIT IMPULSOR IMPELLER KIT KIT GIRANTE	CUERPO HOUSING CORPO 	TAPA WEAR PLATE COPERCHIO 
30 Carb., Standard		USA	0G760300-0T408999			REC46-821307A2	REC47-8508910	REC821354A2		REC8213542
30 Carb., Standard		BEL	0P153500-0P153499			REC46-821307A2	REC47-8508910	REC821354A2		REC8213542
30 Carb., Standard		USA	0T409000 +			REC46-821307A2	REC47-8508910	REC821354A2		REC8213542
30 Carb., Standard		BEL	0P153500 +			REC46-821307A2	REC47-8508910	REC821354A2		REC8213542
30 EFI		USA	0T409000-1B226999			REC46-821307A2	REC47-8508910	REC821354A2		
40 Carb.(3-Cyl.) Standard	1998	USA	0G760300-0T408999			REC46-821307A2	REC47-8508910	REC821354A2		REC8213542
40 Carb.(3-Cyl.) Standard		BEL	0P153500-0P153499			REC46-821307A2	REC47-8508910	REC821354A2		REC8213542
40 Carb.(3-Cyl.) Standard	1998	USA	0T409000 +			REC46-821307A2	REC47-8508910	REC821354A2		REC8213542
40 Carb.(3-Cyl.) Standard		BEL	0P153500 +			REC46-821307A2	REC47-8508910	REC821354A2		REC8213542
40 EFI (3-Cyl.) Standard	1998	USA	0T409000-1B226999			REC46-821307A2	REC47-8508910	REC821354A2		REC8213542
40 EFI (3-Cyl.) Short Shaft	1998	USA	1B227000 +			REC46-821307A2	REC47-8508910	REC821354A2		REC8213542
40 EFI (3-Cyl.) Long Shaft		CHN	1C000001 +	REC46-812966A12		REC46-812966A7	REC47-19453T		REC14334A3	REC19700A2
40 Carb.(4-Cyl.) Bigfoot	1998	USA	0T228405-0T598999	REC12094		REC43055A4	REC47-43026Q02	REC47-43026Q06	REC817275A2	REC8172761
40 Carb.(4-Cyl.) Bigfoot		BEL	0P094500-0P206999	REC12094		REC43055A4	REC47-43026Q02	REC47-43026Q06	REC817275A2	REC8172761
40 EFI (4-Cyl.) Bigfoot	1998	USA	0T409000 +	REC12094		REC43055A4	REC47-43026Q02	REC47-43026Q06	REC817275A2	REC8172761
40 EFI (4-Cyl.) Bigfoot		BEL	0P153500 +	REC12094		REC43055A4	REC47-43026Q02	REC47-43026Q06	REC817275A2	REC8172761
40 EFI (4-Cyl.) Bigfoot		CHN	1C000001 +	REC12094		REC43055A4	REC47-43026Q02	REC47-43026Q06	REC817275A2	REC8172761
45 (4-Cyl.) Bodensee, Std.	1996-98	USA	0G231123-0T178499			REC46-821307A2	REC47-8508910	REC821354A2		REC8213542
45 (4-Cyl.) Bodensee, B.F.	1996-98	USA	0G231123-0T178499	REC12094		REC43055A4	REC47-43026Q02	REC47-43026Q06	REC817275A2	REC8172761
50 Standard	1995-98	USA	0G231123-0T178499			REC46-821307A2	REC47-8508910	REC821354A2		REC8213542
50 Bigfoot	1995-98	USA	0G231123-0T178499	REC12094		REC43055A4	REC47-43026Q02	REC47-43026Q06	REC817275A2	REC8172761
50 Carb.(996cc) Standard	1995-98	USA	0T178500-0T598999	REC46-812966A12		REC46-812966A7	REC47-19453T		REC14334A3	REC19700A2
50 Carb.(996cc) Standard		BEL	0P094500-0P206999	REC46-812966A12		REC46-812966A7	REC47-19453T		REC14334A3	REC19700A2
50 Carb.(996cc) Bigfoot	1995-98	USA	0T178500-0T598999	REC12094		REC43055A4	REC47-43026Q02	REC47-43026Q06	REC817275A2	REC8172761
50 Carb.(996cc) Bigfoot		BEL	0P094500-0P206999	REC12094		REC43055A4	REC47-43026Q02	REC47-43026Q06	REC817275A2	REC8172761
50 EFI (996cc) Standard	1995-98	USA	0T409000 +	REC46-812966A12		REC46-812966A7	REC47-19453T		REC14334A3	REC19700A2
50 EFI (996cc) Standard		BEL	0P153500 +	REC46-812966A12		REC46-812966A7	REC47-19453T		REC14334A3	REC19700A2
50 EFI (996cc) Standard		CHN	1C000001+	REC46-812966A12		REC46-812966A7	REC47-19453T		REC14334A3	REC19700A2
50 EFI (996cc) Bigfoot	1995-98	USA	0T409000 +	REC12094		REC43055A4	REC47-43026Q02	REC47-43026Q06	REC817275A2	REC8172761
50 EFI (996cc) Bigfoot		BEL	0P153500 +	REC12094		REC43055A4	REC47-43026Q02	REC47-43026Q06	REC817275A2	REC8172761
50 EFI (996cc) Bigfoot		CHN	1C000001 +	REC12094		REC43055A4	REC47-43026Q02	REC47-43026Q06	REC817275A2	REC8172761
60 Carb.(996cc) Standard		USA	0T178500-0T598999	REC46-812966A12		REC46-812966A7	REC47-19453T		REC14334A3	REC19700A2
60 Carb.(996cc) Standard		BEL	0P094500-0P206999	REC46-812966A12		REC46-812966A7	REC47-19453T		REC14334A3	REC19700A2
60 Carb.(996cc) Bigfoot		USA	0T178500-0T598999	REC12094		REC43055A4	REC47-43026Q02	REC47-43026Q06	REC817275A2	REC8172761
60 Carb.(996cc) Bigfoot		BEL	0P094500-0P206999	REC12094		REC43055A4	REC47-43026Q02	REC47-43026Q06	REC817275A2	REC8172761
60 EFI (996cc) Standard		USA	0T409000 +	REC46-812966A12		REC46-812966A7	REC47-19453T		REC14334A3	REC19700A2
60 EFI (996cc) Standard		BEL	0P153500 +	REC46-812966A12		REC46-812966A7	REC47-19453T		REC14334A3	REC19700A2
60 EFI (996cc) Standard		CHN	1C000001 +	REC46-812966A12		REC46-812966A7	REC47-19453T		REC14334A3	REC19700A2
60 EFI (996cc) Bigfoot		USA	0T409000 +	REC12094		REC43055A4	REC47-43026Q02	REC47-43026Q06	REC817275A2	REC8172761
60 EFI (996cc) Bigfoot		BEL	0P153500 +	REC12094		REC43055A4	REC47-43026Q02	REC47-43026Q06	REC817275A2	REC8172761
60 EFI (996cc) Bigfoot		CHN	1C000001 +	REC12094		REC43055A4	REC47-43026Q02	REC47-43026Q06	REC817275A2	REC8172761
75 (1596cc)		USA	0G960500-1B366822	REC12094		REC43055A4	REC47-43026Q02	REC47-43026Q06	REC817275A2	REC8172761
90 (1596cc)		USA	0G960500-1B366822	REC12094		REC43055A4	REC47-43026Q02	REC47-43026Q06	REC817275A2	REC8172761
115 (1741cc)		USA	0T178500-1B366822	REC12094		REC43055A4	REC47-43026Q02	REC47-43026Q06	REC817275A2	REC8172761
135 Verado		USA	1B227000 +	REC817275A09	REC817275A08	REC8M0007131	REC47-43026Q02	REC47-43026Q06	REC817275A2	REC8172761
150 Verado		USA	1B227000 +	REC817275A09	REC817275A08	REC8M0007131	REC47-43026Q02	REC47-43026Q06	REC817275A2	REC8172761
175 Verado		USA	1B227000 +	REC817275A09	REC817275A08	REC8M0007131	REC47-43026Q02	REC47-43026Q06	REC817275A2	REC8172761
200 Verado		USA	0T980000 +	REC817275A09	REC817275A08	REC8M0007131	REC47-43026Q02	REC47-43026Q06	REC817275A2	REC8172761
225 Verado		USA	0T980000 +	REC817275A09	REC817275A08	REC8M0007131	REC47-43026Q02	REC47-43026Q06	REC817275A2	REC8172761
250 Verado		USA	0T980000 +	REC817275A09	REC817275A08	REC8M0007131	REC47-43026Q02	REC47-43026Q06	REC817275A2	REC8172761
275 Verado		USA	0T980000 +	REC817275A09	REC817275A08	REC8M0007131	REC47-43026Q02	REC47-43026Q06	REC817275A2	REC8172761
MARK 58 (E)			1139538 +				REC47-89983T			

GUÍA BOMBAS AGUA
WATER PUMP GUIDE
GUIDA POMPA ACQUA

2 TIEMPOS / 2 STROKES

MODELO MODEL MODELLO	AÑO YEAR ANNO	PAIS COUNTRY PAESE	SERIE SERIAL SERIE	KIT BOMBA PUMP KIT KIT POMPA	KIT SUP. UPPER KIT KIT SUP.	BASE BASE BASE 	IMPULSOR IMPELLER GIRANTE 	KIT IMPULSOR IMPELLER KIT KIT GIRANTE	CUERPO HOUSING CORPO 	ACOPLE INOX. PUMP CUP CAPPUCIO INOX. 	TAPA WEAR PLATE COPERCHIO 
3.5	1983-85		6202173 +				REC47-89980			REC70977T	
3.6	1980-82	USA	5404657 +				REC47-89980			REC70977T	
3.6	1980-82	BEL	9252831 +				REC47-89980			REC70977T	
3.6	1980-82	CAN	7145388 +				REC47-89980			REC70977T	
3.9 (14)	1964-71		1655013-2200317				REC47-22748				
3.9 (14)	1964-71		2200318-2498135				REC47-22748				
4 (1-Cyl.) Impulsor / Impeller / Girante 438" Ø Int.	1982-86	USA	5595532-0A809600				REC47-89980	REC47-89980T1	REC93224A1	REC70977T	REC46895
4 (1-Cyl.) Impulsor / Impeller / Girante 438" Ø Int.	1982-86	AUS	8068065 +				REC47-89980	REC47-89980T1	REC93224A1	REC70977T	REC46895
4 (1-Cyl.) Impulsor / Impeller / Girante 438" Ø Int.	1982-86	BEL	9258281-9477829				REC47-89980	REC47-89980T1	REC93224A1	REC70977T	REC46895
4 (1-Cyl.) Impulsor / Impeller / Girante 438" Ø Int.	1982-86	CAN	7143688 +				REC47-89980	REC47-89980T1	REC93224A1	REC70977T	REC46895
4 (1-Cyl.) Impulsor / Impeller / Girante 456" Ø Int.	1982-86	USA	5595532 +	REC46-70941A3		REC46-70941T01	REC47-89981	REC47-89981Q1	REC93224A1	REC70977T	REC46895
4 (1-Cyl.) Impulsor / Impeller / Girante 456" Ø Int.	1982-86	AUS	8068065 +	REC46-70941A3		REC46-70941T01	REC47-89981	REC47-89981Q1	REC93224A1	REC70977T	REC46895
4 (1-Cyl.) Impulsor / Impeller / Girante 456" Ø Int.	1982-86	BEL	9258281 +	REC46-70941A3		REC46-70941T01	REC47-89981	REC47-89981Q1	REC93224A1	REC70977T	REC46895
4 (1-Cyl.) Impulsor / Impeller / Girante 456" Ø Int.	1982-86	CAN	7143688 +	REC46-70941A3		REC46-70941T01	REC47-89981	REC47-89981Q1	REC93224A1	REC70977T	REC46895
40/4 (2-Cyl.) GNAT Impulsor / Impeller / Girante 438" Ø Int.	1976-79	BEL	9075839-9256980				REC47-89980			REC70977T	
40/4 (2-Cyl.) GNAT Impulsor / Impeller / Girante 438" Ø Int.	1976-79	CAN	7085673-7146487				REC47-89980			REC70977T	
40/4 (2-Cyl.) Impulsor / Impeller / Girante 456" Ø Int.	1976-79	BEL	9075839-9256980				REC47-89981			REC70977T	
40/4 (2-Cyl.) Impulsor / Impeller / Girante 456" Ø Int.	1976-79	CAN	7085673-7146487				REC47-89981			REC70977T	
40/4 (2-Cyl.)	1980-81	USA	5589202 +				REC47-89980			REC70977T	
40/4 (2-Cyl.)	1980-81	AUS	8065265 +				REC47-89980			REC70977T	
40/4 (2-Cyl.)	1980-81	BEL	9256981 +				REC47-89980			REC70977T	
40/4 (2-Cyl.)	1980-81	CAN	7146488 +				REC47-89980			REC70977T	
45/4.5 (1-Cyl.)	1975-79	USA	4107220-5595531	REC46-70941A3		REC46-70941T01	REC47-89981	REC47-89981Q1	REC93224A1	REC70977T	REC46895
45/4.5 (1-Cyl.)	1975-79	AUS	8026540-8068064	REC46-70941A3		REC46-70941T01	REC47-89981	REC47-89981Q1	REC93224A1	REC70977T	REC46895
45/4.5 (1-Cyl.)	1975-79	BEL	9072179-9258280	REC46-70941A3		REC46-70941T01	REC47-89981	REC47-89981Q1	REC93224A1	REC70977T	REC46895
45/4.5 (1-Cyl.)	1975-79	CAN	7045758-7147237	REC46-70941A3		REC46-70941T01	REC47-89981	REC47-89981Q1	REC93224A1	REC70977T	REC46895
45/4.5 (1-Cyl.) Impulsor / Impeller / Girante 438" Ø Int.	1980-85	USA	5595532 +				REC47-89980	REC47-89980T1	REC93224A1	REC70977T	REC46895
45/4.5 (1-Cyl.) Impulsor / Impeller / Girante 438" Ø Int.	1980-85	AUS	8068065 +				REC47-89980	REC47-89980T1	REC93224A1	REC70977T	REC46895
45/4.5 (1-Cyl.) Impulsor / Impeller / Girante 438" Ø Int.	1980-85	BEL	9258281 +				REC47-89980	REC47-89980T1	REC93224A1	REC70977T	REC46895
45/4.5 (1-Cyl.) Impulsor / Impeller / Girante 438" Ø Int.	1980-85	CAN	7147238 +				REC47-89980	REC47-89980T1	REC93224A1	REC70977T	REC46895
45/4.5 (1-Cyl.) Impulsor / Impeller / Girante 456" Ø Int.	1980-85	USA	5595532 +	REC46-70941A3		REC46-70941T01	REC47-89981	REC47-89981Q1	REC93224A1	REC70977T	REC46895
45/4.5 (1-Cyl.) Impulsor / Impeller / Girante 456" Ø Int.	1980-85	AUS	8068065 +	REC46-70941A3		REC46-70941T01	REC47-89981	REC47-89981Q1	REC93224A1	REC70977T	REC46895
45/4.5 (1-Cyl.) Impulsor / Impeller / Girante 456" Ø Int.	1980-85	BEL	9258281 +	REC46-70941A3		REC46-70941T01	REC47-89981	REC47-89981Q1	REC93224A1	REC70977T	REC46895
45/4.5 (1-Cyl.) Impulsor / Impeller / Girante 456" Ø Int.	1980-85	CAN	7147238 +	REC46-70941A3		REC46-70941T01	REC47-89981	REC47-89981Q1	REC93224A1	REC70977T	REC46895
60 (6 HP)	1963-65		1408611-1490054				REC47-22748				
60 (6 HP)	1963-65		1490055-1582402				REC47-22748				
60 (6 HP) (12)	1963-65		1582403-1916138				REC47-22748				
60 (6 HP) (12)	1966-68		1916139-2193817				REC47-89981				
60 (6 HP)	1966-68		2193818-2529894				REC47-89981		REC93224A1	REC70977T	REC46895
60J (6 HP)	1967-68		2385673-2387383				REC47-89981				
6	1986-93	USA	0A197112-0T800749	REC46-42089A5		REC46-42040T5	REC47-420382	REC47-42038Q3	REC46-42089A2		REC42200
6	1986-93	BEL	9461526 +	REC46-42089A5		REC46-42040T5	REC47-420382	REC47-42038Q3	REC46-42089A2		REC42200
75 (7.5 HP)	1969-77	USA	2529895-4131609				REC47-89981		REC93224A1	REC70977T	REC46895
75 (7.5 HP)	1974-77	AUS	8015315-8028839				REC47-89981		REC93224A1	REC70977T	REC46895
75 (7.5 HP)	1974-77	BEL	9043194-9079488				REC47-89981		REC93224A1	REC70977T	REC46895
75 (7.5 HP)	1974-77	CAN	7028598-7050207				REC47-89981		REC93224A1	REC70977T	REC46895
75 (7.5 HP)	1974-78	USA	4131610-5226934	REC46-70941A3		REC46-70941T01	REC47-89981	REC47-89981Q1	REC93224A1	REC70977T	REC46895
75 (7.5 HP)	1974-77	AUS	8028840-8058019	REC46-70941A3		REC46-70941T01	REC47-89981	REC47-89981Q1	REC93224A1	REC70977T	REC46895
75 (7.5 HP)	1974-78	BEL	9079489-9219255	REC46-70941A3		REC46-70941T01	REC47-89981	REC47-89981Q1	REC93224A1	REC70977T	REC46895

MODELO MODEL MODELLO	AÑO YEAR ANNO	PAIS COUNTRY PAESE	SERIE SERIAL SERIE	KIT BOMBA PUMP KIT KIT POMPA	KIT SUP. UPPER KIT KIT SUP.	BASE BASE BASE	IMPULSOR IMPELLER GIRANTE	KIT IMPULSOR IMPELLER KIT KIT GIRANTE	CUERPO HOUSING CORPO	ACOPLE INOX. PUMP CUP CAPPUCIO INOX.	TAPA WEAR PLATE COPERCHIO
75 (7.5 HP)	1974-78	CAN	7050206-7136037	REC46-70941A3		REC46-70941T01	REC47-89981	REC47-89981Q1	REC93224A1	REC70977T	REC46895
7.5 HP Impulsor / Impeller / Girante 438" Ø Int.	1979-86	USA	5206550 +				REC47-89980	REC47-89980T1	REC93224A1	REC70977T	REC46895
7.5 HP Impulsor / Impeller / Girante 438" Ø Int.	1979-86	AUS	8057545 +				REC47-89980	REC47-89980T1	REC93224A1	REC70977T	REC46895
7.5 HP Impulsor / Impeller / Girante 438" Ø Int.	1979-86	BEL	9217756 +				REC47-89980	REC47-89980T1	REC93224A1	REC70977T	REC46895
7.5 HP Impulsor / Impeller / Girante 438" Ø Int.	1979-86	CAN	7125388 +				REC47-89980	REC47-89980T1	REC93224A1	REC70977T	REC46895
7.5 HP Impulsor / Impeller / Girante 456" Ø Int.	1979-86	USA	5206550 +	REC46-70941A3		REC46-70941T01	REC47-89981	REC47-89981Q1	REC93224A1	REC70977T	REC46895
7.5 HP Impulsor / Impeller / Girante 456" Ø Int.	1979-86	AUS	8057545 +	REC46-70941A3		REC46-70941T01	REC47-89981	REC47-89981Q1	REC93224A1	REC70977T	REC46895
7.5 HP Impulsor / Impeller / Girante 456" Ø Int.	1979-86	BEL	9217756 +	REC46-70941A3		REC46-70941T01	REC47-89981	REC47-89981Q1	REC93224A1	REC70977T	REC46895
7.5 HP Impulsor / Impeller / Girante 456" Ø Int.	1979-86	CAN	7125388 +	REC46-70941A3		REC46-70941T01	REC47-89981	REC47-89981Q1	REC93224A1	REC70977T	REC46895
8	1986-93	USA	0A197112 +	REC46-42089A5		REC46-42040T5	REC47-420382	REC47-42038Q3	REC46-42089A2		REC42200
8	1986-93	BEL	9461526 +	REC46-42089A5		REC46-42040T5	REC47-420382	REC47-42038Q3	REC46-42089A2		REC42200
110 (9.8 HP) (13)	1966-69		1865779-2196388				REC47-89981				
110 (9.8 HP)	1970-73		2196389-3795657				REC47-89981		REC93224A1	REC70977T	REC46895
110 (9.8 HP)	1974-77	USA	3795658-4126459				REC47-89981		REC46-42089A2	REC70977T	REC46895
110 (9.8 HP)	1974-77	AUS	8015040-8028439				REC47-89981		REC46-42089A2	REC70977T	REC46895
110 (9.8 HP)	1974-77	BEL	9041439-9078138				REC47-89981		REC46-42089A2	REC70977T	REC46895
110 (9.8 HP)	1974-77	CAN	7027323-7049107				REC47-89981		REC46-42089A2	REC70977T	REC46895
110 (9.8 HP)	1974-78	USA	4126460-5206549	REC46-70941A3		REC46-70941T01	REC47-89981	REC47-89981Q1	REC93224A1	REC70977T	REC46895
110 (9.8 HP)	1974-78	AUS	8028440-8057554	REC46-70941A3		REC46-70941T01	REC47-89981	REC47-89981Q1	REC93224A1	REC70977T	REC46895
110 (9.8 HP)	1974-78	BEL	9078139-9217755	REC46-70941A3		REC46-70941T01	REC47-89981	REC47-89981Q1	REC93224A1	REC70977T	REC46895
110 (9.8 HP)	1974-78	CAN	7049108-7125387	REC46-70941A3		REC46-70941T01	REC47-89981	REC47-89981Q1	REC93224A1	REC70977T	REC46895
9.8 HP Impulsor / Impeller / Girante 438" Ø Int.	1979-85	USA	5206550 +				REC47-89980	REC47-89980T1	REC93224A1	REC70977T	REC46895
9.8 HP Impulsor / Impeller / Girante 438" Ø Int.	1979-85	AUS	8057545 +				REC47-89980	REC47-89980T1	REC93224A1	REC70977T	REC46895
9.8 HP Impulsor / Impeller / Girante 438" Ø Int.	1979-85	BEL	9217756 +				REC47-89980	REC47-89980T1	REC93224A1	REC70977T	REC46895
9.8 HP Impulsor / Impeller / Girante 438" Ø Int.	1979-85	CAN	7125388 +				REC47-89980	REC47-89980T1	REC93224A1	REC70977T	REC46895
9.8 HP Impulsor / Impeller / Girante 456" Ø Int.	1979-85	USA	5206550 +	REC46-70941A3		REC46-70941T01	REC47-89981	REC47-89981Q1	REC93224A1	REC70977T	REC46895
9.8 HP Impulsor / Impeller / Girante 456" Ø Int.	1979-85	AUS	8057545 +	REC46-70941A3		REC46-70941T01	REC47-89981	REC47-89981Q1	REC93224A1	REC70977T	REC46895
9.8 HP Impulsor / Impeller / Girante 456" Ø Int.	1979-85	BEL	9217756 +	REC46-70941A3		REC46-70941T01	REC47-89981	REC47-89981Q1	REC93224A1	REC70977T	REC46895
9.8 HP Impulsor / Impeller / Girante 456" Ø Int.	1979-85	CAN	7125388 +	REC46-70941A3		REC46-70941T01	REC47-89981	REC47-89981Q1	REC93224A1	REC70977T	REC46895
9.9	1986-98	USA	0A197112 +	REC46-42089A5		REC46-42040T5	REC47-420382	REC47-42038Q3	REC46-42089A2		REC42200
9.9	1986-93	BEL	9461526 +	REC46-42089A5		REC46-42040T5	REC47-420382	REC47-42038Q3	REC46-42089A2		REC42200
XR10, Sea Pro, 10 Mag.& Marat	1990-98	USA	0D038000 +	REC46-42089A5		REC46-42040T5	REC47-420382	REC47-42038Q3	REC46-42089A2		REC42200
XR10, Sea Pro, 10 Mag.& Mara	1990-98	BEL	9596000 +	REC46-42089A5		REC46-42040T5	REC47-420382	REC47-42038Q3	REC46-42089A2		REC42200
15	1988-98	USA	0B292414 +	REC46-42089A5		REC46-42040T5	REC47-420382	REC47-42038Q3	REC46-42089A2		REC42200
15	1988-93	BEL	9542620 +	REC46-42089A5		REC46-42040T5	REC47-420382	REC47-42038Q3	REC46-42089A2		REC42200
15 Sea Pro & Marathon	1994-98	USA	0G044365 +	REC46-42089A5		REC46-42040T5	REC47-420382	REC47-42038Q3	REC46-42089A2		REC42200
15 Sea Pro & Marathon	1997-98	BEL	9927000 +	REC46-42089A5		REC46-42040T5	REC47-420382	REC47-42038Q3	REC46-42089A2		REC42200
15 XD, Big Foot	1997-98	BEL	9927000 +		REC46-99157T2		REC47-8508910	REC47-85089Q4	REC46-99157T2		REC85083
18, 18XD	1980-85	USA	5837437 +		REC46-99157T2		REC47-8508910	REC47-85089Q4	REC46-99157T2		REC85083
18, 18XD	1980-83	AUS	8071973 +		REC46-99157T2		REC47-8508910	REC47-85089Q4	REC46-99157T2		REC85083
18, 18XD	1980-85	BEL	9308306 +		REC46-99157T2		REC47-8508910	REC47-85089Q4	REC46-99157T2		REC85083
200 (20 HP)	1966-67		1866496-2296266								REC46-96146A6
200 (20 HP) (2)	1968-69		2296267-2827676								REC46-96146A6
200 (20 HP) (4)	1968-69		2296267-2827676								REC46-96146A6
200 (20 HP)	1970-81	USA	2827677-6443972				REC47-89982	REC47-89982T1			REC46-96146A6
200 (20 HP)	1973-81	AUS	8006265 +				REC47-89982	REC47-89982T1			REC46-96146A6
200 (20 HP)	1973-81	BEL	9016254-9415100				REC47-89982	REC47-89982T1			REC46-96146A6
200 (20 HP)	1973-81	CAN	7012358-7209532				REC47-89982	REC47-89982T1			REC46-96146A6
20, 20XD	1986-87	USA	6443973-0T800749		REC46-99157T2		REC47-8508910	REC47-85089Q4	REC46-99157T2		REC85083
20, 20XD	1986-87	BEL	9415101 +		REC46-99157T2		REC47-8508910	REC47-85089Q4	REC46-99157T2		REC85083
20, 20XD	1986-87	CAN	7209533 +		REC46-99157T2		REC47-8508910	REC47-85089Q4	REC46-99157T2		REC85083
25, 25XD	1980-87	USA	5705532 +		REC46-99157T2		REC47-8508910	REC47-85089Q4	REC46-99157T2		REC85083

MODELO MODEL MODELLO	AÑO YEAR ANNO	PAIS COUNTRY PAESE	SERIE SERIAL SERIE	KIT BOMBA PUMP KIT KIT POMPA	KIT SUP. UPPER KIT KIT SUP.	BASE BASE BASE	IMPULSOR IMPELLER GIRANTE	KIT IMPULSOR IMPELLER KIT KIT GIRANTE	CUERPO HOUSING CORPO	ACOPLE INOX. PUMP CUP CAPPUCIO INOX.	TAPA WEAR PLATE COPERCHIO
25, 25XD	1980-83	AUS	8073158 +		REC46-99157T2		REC47-8508910	REC47-85089Q4	REC46-99157T2		REC85083
25 Sea Pro, Mara., Super 15	1988-98	USA	0B238464 +		REC46-99157T2		REC47-8508910	REC47-85089Q4	REC46-99157T2		REC85083
25 Sea Pro, Mara., Super 15	1988-94	BEL	9507381 +		REC46-99157T2		REC47-8508910	REC47-85089Q4	REC46-99157T2		REC85083
25 Sea Pro, Mara., Super 15	1988-94	CAN	0A730007 +		REC46-99157T2		REC47-8508910	REC47-85089Q4	REC46-99157T2		REC85083
25 (3-Cyl.)	1997 +	USA	0E268781 +		REC46-99157T2		REC47-8508910	REC47-85089Q4	REC46-99157T2		REC85083
300 (30 HP)	1959-61		1271884-1448139				REC47-89983T				
30 (2-Cyl.) (644cc)	1994-98	USA	0G053314-0T598999			REC46-821307A2	REC47-8508910	REC821354A2			REC8213542
30 Jet	1994-97	USA	0C159200-0G58999	REC46-77177A3	REC46-60366T1	REC46-77177A1	REC47-89983T	REC47-89983Q1	REC46-77822A1	REC48753	REC32768
30 Jet	1998	USA	0G590000 +				REC47-8508910	REC821354A2			REC8213542
350 (35 HP)	1963-65		157114-1960826				REC47-89983T				
350 (35 HP) (4)	1966-69		1960827-2453068		REC46-60366T1		REC47-89983T		REC46-77822A1	REC48753	REC32768
35 (2-Cyl.)	1984-89	USA	6445653 +	REC46-77177A3	REC46-60366T1	REC46-77177A1	REC47-89983T	REC47-89983Q1	REC46-77822A1	REC48753	REC32768
35 (2-Cyl.)	1984-86	BEL	9384476 +	REC46-77177A3	REC46-60366T1	REC46-77177A1	REC47-89983T	REC47-89983Q1	REC46-77822A1	REC48753	REC32768
35 (2-Cyl.)	1984-86	USA	7209608 +	REC46-77177A3	REC46-60366T1	REC46-77177A1	REC47-89983T	REC47-89983Q1	REC46-77822A1	REC48753	REC32768
400 (40 HP)	1960-61		1279685-1476509				REC47-89983T				
400, 402 (40 HP)	1970-77	USA	2874704-4362214		REC46-60366T1		REC47-89983T	REC47-89983Q1	REC46-77822A1	REC48753	REC32768
400, 402 (40 HP)	1970-77	AUS	8002335-8036449		REC46-60366T1		REC47-89983T	REC47-89983Q1	REC46-77822A1	REC48753	REC32768
400, 402 (40 HP)	1970-77	BEL	3339688-9108563		REC46-60366T1		REC47-89983T	REC47-89983Q1	REC46-77822A1	REC48753	REC32768
400, 402 (40 HP)	1970-77	CAN	3340783-7070272		REC46-60366T1		REC47-89983T	REC47-89983Q1	REC46-77822A1	REC48753	REC32768
402 (40 HP)	1975-77	USA	4362215-4860102		REC46-60366T1	REC46-73640A1	REC47-89983T	REC47-89983Q1	REC46-77822A1	REC48753	REC32768
402 (40 HP)	1975-77	AUS	8036450-8052124		REC46-60366T1	REC46-73640A1	REC47-89983T	REC47-89983Q1	REC46-77822A1	REC48753	REC32768
402 (40 HP)	1975-77	BEL	9108564-9184450		REC46-60366T1	REC46-73640A1	REC47-89983T	REC47-89983Q1	REC46-77822A1	REC48753	REC32768
402 (40 HP)	1975-77	CAN	7070273-7112422		REC46-60366T1	REC46-73640A1	REC47-89983T	REC47-89983Q1	REC46-77822A1	REC48753	REC32768
402, 40 (2-Cyl.) 1983 +	1978-83	USA	4860103 +	REC46-77177A3	REC46-60366T1	REC46-77177A1	REC47-89983T	REC47-89983Q1	REC46-77822A1	REC48753	REC32768
402, 40 (2-Cyl.) 1983 +	1978-83	AUS	8052125 +	REC46-77177A3	REC46-60366T1	REC46-77177A1	REC47-89983T	REC47-89983Q1	REC46-77822A1	REC48753	REC32768
402, 40 (2-Cyl.) 1983 +	1978-83	BEL	9184451 +	REC46-77177A3	REC46-60366T1	REC46-77177A1	REC47-89983T	REC47-89983Q1	REC46-77822A1	REC48753	REC32768
402, 40 (2-Cyl.) 1983 +	1978-83	CAN	7112423 +	REC46-77177A3	REC46-60366T1	REC46-77177A1	REC47-89983T	REC47-89983Q1	REC46-77822A1	REC48753	REC32768
40 (2-Cyl.) (644cc) 1994 +	1994-98	USA	0G053314 +			REC46-821307A2	REC47-8508910	REC821354A2			REC8213542
40 (3-Cyl.)	1997-98	USA	0G531301 +			REC46-821307A2	REC47-8508910	REC821354A2			REC8213542
40 (3-Cyl.)	1997-98	BEL	9973100 +			REC46-821307A2	REC47-8508910	REC821354A2			REC8213542
40 (4-Cyl.)	1989 +	USA	0C159200 +	REC46-77177A3	REC46-60366T1	REC46-77177A1	REC47-89983T	REC47-89983Q1	REC46-77822A1	REC48753	REC32768
40 (4-Cyl.)	1989 +	BEL	9570790 +	REC46-77177A3	REC46-60366T1	REC46-77177A1	REC47-89983T	REC47-89983Q1	REC46-77822A1	REC48753	REC32768
45 Jet	1994-95	USA	0D000750 +	REC46-812966A11			REC47-19453T	REC47-19453QZ	REC14334A3		REC19700A2
45 (4-Cyl.)	1986	USA	5531630 +	REC46-77177A3	REC46-60366T1	REC46-77177A1	REC47-89983T	REC47-89983Q1	REC46-77822A1	REC48753	REC32768
45 (4-Cyl.)	1986	AUS	8063985 +	REC46-77177A3	REC46-60366T1	REC46-77177A1	REC47-89983T	REC47-89983Q1	REC46-77822A1	REC48753	REC32768
45 (4-Cyl.)	1986	BEL	9248006 +	REC46-77177A3	REC46-60366T1	REC46-77177A1	REC47-89983T	REC47-89983Q1	REC46-77822A1	REC48753	REC32768
45 (4-Cyl.)	1986	CAN	743688 +	REC46-77177A3	REC46-60366T1	REC46-77177A1	REC47-89983T	REC47-89983Q1	REC46-77822A1	REC48753	REC32768
500 (50 HP)	1961-64		1421113-1460498				REC47-89983T				
500 (50 HP)	1961-64		1477910-1521913				REC47-89983T				
500 (50 HP)	1961-67	USA	1521914-2305100				REC47-89983T				REC32768
500 (50 HP)	1965-67	CAN	1755549-2305100				REC47-89983T				REC32768
500 (50 HP) (2)	1968-70	USA	2305101-2478119				REC47-89983T				REC32768
500 (50 HP) (4)	1968-70	USA	2305101-2478119		REC46-60366T1		REC47-89983T	REC47-89983Q1	REC46-77822A1	REC48753	REC32768
500 (50 HP) (2)	1971-74	CAN	2305101-2308830				REC47-89983T				REC32768
500 (50 HP) (4)	1971-74	CAN	2305101-2308830		REC46-60366T1		REC47-89983T	REC47-89983Q1	REC46-77822A1	REC48753	REC32768
500 (50 HP)	1971-75	USA	2514919-4357639		REC46-60366T1		REC47-89983T	REC47-89983Q1	REC46-77822A1	REC48753	REC32768
500 (50 HP)	1971-75	AUS	2863739-8030089		REC46-60366T1		REC47-89983T	REC47-89983Q1	REC46-77822A1	REC48753	REC32768
500 (50 HP)	1971-75	BEL	9001581-9107213		REC46-60366T1		REC47-89983T	REC47-89983Q1	REC46-77822A1	REC48753	REC32768
500 (50 HP)	1971-75	CAN	2519919-7068997		REC46-60366T1		REC47-89983T	REC47-89983Q1	REC46-77822A1	REC48753	REC32768
500, 50 HP (4-Cyl.)	1976-79	USA	4357640-5531629	REC46-73640A2	REC46-60366T1	REC46-73640A1	REC47-89983T	REC47-89983Q1	REC46-77822A1	REC48753	REC32768
500, 50 HP (4-Cyl.)	1976-79	AUS	8030090-8063984	REC46-73640A2	REC46-60366T1	REC46-73640A1	REC47-89983T	REC47-89983Q1	REC46-77822A1	REC48753	REC32768
500, 50 HP (4-Cyl.)	1976-79	BEL	9107214-9248005	REC46-73640A2	REC46-60366T1	REC46-73640A1	REC47-89983T	REC47-89983Q1	REC46-77822A1	REC48753	REC32768
500, 50 HP (4-Cyl.)	1976-79	CAN	7068998-7143687	REC46-73640A2	REC46-60366T1	REC46-73640A1	REC47-89983T	REC47-89983Q1	REC46-77822A1	REC48753	REC32768
50 HP (4-Cyl.)	1980-85	USA	5531630 +	REC46-77177A3	REC46-60366T1	REC46-77177A1	REC47-89983T	REC47-89983Q1	REC46-77822A1	REC48753	REC32768
50 HP (4-Cyl.)	1980-85	AUS	8063985 +	REC46-77177A3	REC46-60366T1	REC46-77177A1	REC47-89983T	REC47-89983Q1	REC46-77822A1	REC48753	REC32768
50 HP (4-Cyl.)	1980-85	BEL	9248006 +	REC46-77177A3	REC46-60366T1	REC46-77177A1	REC47-89983T	REC47-89983Q1	REC46-77822A1	REC48753	REC32768
50 HP (4-Cyl.)	1980-85	CAN	7143688 +	REC46-77177A3	REC46-60366T1	REC46-77177A1	REC47-89983T	REC47-89983Q1	REC46-77822A1	REC48753	REC32768
50 HP (3-Cyl.)	1986-87	USA	6428681-0D000749	REC46-77177A3	REC46-60366T1	REC46-77177A1	REC47-89983T	REC47-89983Q1	REC46-77822A1	REC48753	REC32768
50 HP (3-Cyl.)	1986-87	BEL	9385911-9683054	REC46-77177A3	REC46-60366T1	REC46-77177A1	REC47-89983T	REC47-89983Q1	REC46-77822A1	REC48753	REC32768
50 HP (3-Cyl.)	1986-87	CAN	7208333 +	REC46-77177A3	REC46-60366T1	REC46-77177A1	REC47-89983T	REC47-89983Q1	REC46-77822A1	REC48753	REC32768
50 HP (3-Cyl.)	1991-97	USA	0D000750-0G58999	REC46-812966A11		REC46-812966A7	REC47-19453T	REC47-19453QZ	REC14334A3		REC19700A2
50 HP (3-Cyl.)	1991-97	BEL	9683055-9973099	REC46-812966A11		REC46-812966A7	REC47-19453T	REC47-19453QZ	REC14334A3		REC19700A2
50 HP (3-Cyl.)	1998	USA	0G590000 +			REC46-821307A2	REC47-8508910	REC821354A2			REC8213542
50 HP (3-Cyl.)	1998	BEL	9973100 +			REC46-821307A2	REC47-8508910	REC821354A2			REC8213542
55 HP (3-Cyl.)	1996-97	USA	0D000750 +	REC46-812966A11		REC46-812966A7	REC47-19453T	REC47-19453QZ	REC14334A3		REC19700A2
55 HP (3-Cyl.)	1996-97	BEL	9741042 +	REC46-812966A11		REC46-812966A7	REC47-19453T	REC47-19453QZ	REC14334A3		REC19700A2
60 HP (3-Cyl.)	1984-87	USA	6428681-0D000749	REC46-77177A3	REC46-60366T1	REC46-77177A1	REC47-89983T	REC47-89983Q1	REC46-77822A1	REC48753	REC32768
60 HP (3-Cyl.)	1984-87	BEL	9385911-9683054	REC46-77177A3	REC46-60366T1	REC46-77177A1	REC47-89983T	REC47-89983Q1	REC46-77822A1	REC48753	REC32768
60 HP (3-Cyl.)	1984-87	CAN	7208333 +	REC46-77177A3	REC46-60366T1	REC46-77177A1	REC47-89983T	REC47-89983Q1	REC46-77822A1	REC48753	REC32768
60 HP (3-Cyl.) Standard	1991-95	USA	0D000750 +	REC46-812966A11		REC46-812966A7	REC47-19453T	REC47-19453QZ	REC14334A3		REC19700A2
60 HP (3-Cyl.) Standard	1991-95	BEL	9683055 +	REC46-812966A11		REC46-812966A7	REC47-19453T	REC47-19453QZ	REC14334A3		REC19700A2
60 HP (3-Cyl.) Bigfoot	1991-95	USA	0D000750 +	REC12094		REC43055A4	REC47-43026Q02	REC47-43026Q06	REC817275A2		REC8172761

MODELO MODEL MODELLO	AÑO YEAR ANNO	PAIS COUNTRY PAESE	SERIE SERIAL SERIE	KIT BOMBA PUMP KIT KIT POMPA	KIT SUP. UPPER KIT KIT SUP.	BASE BASE BASE 	IMPULSOR IMPELLER GIRANTE 	KIT IMPULSOR IMPELLER KIT KIT GIRANTE	CUERPO HOUSING CORPO 	ACOPLE INOX. PUMP CUP CAPPUCIO INOX. 	TAPA WEAR PLATE COPERCHIO 
60 HP (3-Cyl.) Bigfoot	1991-95	BEL	9683055 +	REC12094		REC43055A4	REC47-43026Q02	REC47-43026Q06	REC817275A2		REC8172761
650 (65 HP) (4-Cyl.) (2)	1963-69		1542745-2803561		REC46-60367A1		REC47-89984T4	REC47-89984Q5	REC46-96148T1		REC324351
650 (65 HP) (4-Cyl.) (4)	1963-69		1542745-2803561		REC46-60367A1		REC47-89984T4	REC47-89984Q5	REC46-96148T1	REC48752T	REC324351
650 (65 HP) (4-Cyl.)	1970-72		2803562-2874263		REC46-60367A1		REC47-89984T4	REC47-89984Q5	REC46-96148T1	REC48752T	REC324351
650 (65 HP) (4-Cyl.)	1970-72		2997439-3293183		REC46-60367A1	-	REC47-89984T4	REC47-89984Q5	REC46-96148T1	REC48752T	REC324351
65 HP (3-Cyl.)	1972-75	USA	3293184-4382056		REC46-60366T1		REC47-89983T		REC46-77822A1	REC48753	REC32768
65 HP (3-Cyl.)	1973-75	AUS	8006640-8042349		REC46-60366T1		REC47-89983T		REC46-77822A1	REC48753	REC32768
65 HP (3-Cyl.)	1973-75	BEL	9020074-9112988		REC46-60366T1		REC47-89983T		REC46-77822A1	REC48753	REC32768
65 HP (3-Cyl.)	1973-75	CAN	7013633-7073472		REC46-60366T1		REC47-89983T		REC46-77822A1	REC48753	REC32768
65 HP (3-Cyl.)	1976	USA	4382057-4571651		REC46-60366T1	REC46-73640A1	REC47-89983T		REC46-77822A1	REC48753	REC32768
65 HP (3-Cyl.)	1976	BEL	9112989-9135824		REC46-60366T1	REC46-73640A1	REC47-89983T		REC46-77822A1	REC48753	REC32768
65 HP (3-Cyl.)	1976	CAN	7073473-7087822		REC46-60366T1	REC46-73640A1	REC47-89983T		REC46-77822A1	REC48753	REC32768
65 Jet	1994-98	USA	0D283222 +	REC12094		REC43055A4	REC47-43026Q02	REC47-43026Q06	REC817275A2		REC8172761
65 Jet	1994-98	BEL	9793577 +	REC12094		REC43055A4	REC47-43026Q02	REC47-43026Q06	REC817275A2		REC8172761
700 (70 HP) (6-Cyl.)	1961		1413611-1436114				REC47-89984T4				REC324351
700 (70 HP) (6-Cyl.)	1961		1482212-1503458				REC47-89984T4				
700 E-2 (70 HP) (6-Cyl.)	1961		1503459-1503958				REC47-89984T4				
700 EL-2 (70 HP) (6-Cyl.)	1961		1503459-1505110				REC47-89984T4				
700 E-2 (70 HP) (6-Cyl.) (11)	1961		1503959-1566239		REC46-60367A1		REC47-89984T4	REC47-89984Q5	REC46-96148T1		REC324351
700 EL-2 (70 HP) (6-Cyl.) (11)	1961		1505111-1566239		REC46-60367A1		REC47-89984T4	REC47-89984Q5	REC46-96148T1		REC324351
70 HP (3-Cyl.)	1977-79	USA	4571652-4977156	REC46-73640A2	REC46-60366T1	REC46-73640A1	REC47-89983T		REC46-77822A1	REC48753	REC32768
70 HP (3-Cyl.)	1977-79	AUS	8042350-8050199	REC46-73640A2	REC46-60366T1	REC46-73640A1	REC47-89983T		REC46-77822A1	REC48753	REC32768
70 HP (3-Cyl.)	1977-79	BEL	9135825-9196960	REC46-73640A2	REC46-60366T1	REC46-73640A1	REC47-89983T		REC46-77822A1	REC48753	REC32768
70 HP (3-Cyl.)	1977-79	CAN	7087823-7110997	REC46-73640A2	REC46-60366T1	REC46-73640A1	REC47-89983T		REC46-77822A1	REC48753	REC32768
70 HP (3-Cyl.)	1977-83	USA	4977157-6428680	REC46-77177A3	REC46-60366T1	REC46-77177A1	REC47-89983T	REC47-89983Q1	REC46-77822A1	REC48753	REC32768
70 HP (3-Cyl.)	1977-83	AUS	8050200 +	REC46-77177A3	REC46-60366T1	REC46-77177A1	REC47-89983T	REC47-89983Q1	REC46-77822A1	REC48753	REC32768
70 HP (3-Cyl.)	1977-83	BEL	9196961-9385910	REC46-77177A3	REC46-60366T1	REC46-77177A1	REC47-89983T	REC47-89983Q1	REC46-77822A1	REC48753	REC32768
70 HP (3-Cyl.)	1977-83	CAN	7110998-7208332	REC46-77177A3	REC46-60366T1	REC46-77177A1	REC47-89983T	REC47-89983Q1	REC46-77822A1	REC48753	REC32768
70 HP (3-Cyl.) (6)	1987	USA	0A996142-0C221999	REC12094		REC43055A4	REC47-43026Q02		REC817275A2		REC817275A2
70 HP (3-Cyl.) (6)	1987	BEL	9483121-9589038	REC12094		REC43055A4	REC47-43026Q02		REC817275A2		REC817275A2
70 HP (3-Cyl.) (5)	1987	USA	0A996142-0C221999	REC12094		REC43055A4	REC47-43026Q02	REC47-43026Q06	REC817275A2		REC8172761
70 HP (3-Cyl.) (5)	1987	BEL	9483121-9589038	REC12094		REC43055A4	REC47-43026Q02	REC47-43026Q06	REC817275A2		REC8172761
75 HP (4-Cyl.)	1984-88	USA	6432901 +	-	REC46-60367A1		REC47-89984T4	REC47-89984Q5	REC46-96148T1	REC48752T	REC324351
75 HP (4-Cyl.)	1984-88	BEL	9393856 +	-	REC46-60367A1		REC47-89984T4	REC47-89984Q5	REC46-96148T1	REC48752T	REC324351
75 HP (4-Cyl.)	1984-88	CAN	7208573 +	-	REC46-60367A1		REC47-89984T4	REC47-89984Q5	REC46-96148T1	REC48752T	REC324351
75 HP (3-Cyl.) (6)	1990-98	USA	0C222000 +	REC12094		REC43055A4	REC47-43026Q02	REC47-43026Q06	REC817275A2		REC817275A2
75 HP (3-Cyl.) (6)	1990-98	BEL	9589039 +	REC12094		REC43055A4	REC47-43026Q02	REC47-43026Q06	REC817275A2		REC817275A2
75 HP (3-Cyl.) (5)	1990-98	USA	0C222000 +	REC12094		REC43055A4	REC47-43026Q02	REC47-43026Q06	REC817275A2		REC8172761
75 HP (3-Cyl.) (5)	1990-98	BEL	9589039 +	REC12094		REC43055A4	REC47-43026Q02	REC47-43026Q06	REC817275A2		REC8172761
75 (3-Cyl.) **Optimax**	1994-98	USA	0T980000 +	REC12094		REC43055A4	REC47-43026Q02	REC47-43026Q06	REC817275A2		REC8172761
800 (80 HP) (6-Cyl.)	1960		1335465-1398629				REC47-89984T4				
800 (80 HP) (6-Cyl.)	1961		1398630-1566239				REC47-89984T4				REC324351
800 (80 HP) (4-Cyl.)	1969-72		2559001-3144218		REC46-60367A1		REC47-89984T4	REC47-89984Q5	REC46-96148T1	REC48752T	REC324351
800 (80 HP) (4-Cyl.)	1969-72		3144219-3493912		REC46-60367A1	-	REC47-89984T4	REC47-89984Q5	REC46-96148T1	REC48752T	REC324351
80 HP (4-Cyl.)	1978-83	USA	4831999-6432900		REC46-60367A1		REC47-89984T4	REC47-89984Q5	REC46-96148T1	REC48752T	REC324351
80 HP (4-Cyl.)	1978-83	AUS	8050200 +		REC46-60367A1		REC47-89984T4	REC47-89984Q5	REC46-96148T1	REC48752T	REC324351
80 HP (4-Cyl.)	1978-83	BEL	9177626-9393855		REC46-60367A1		REC47-89984T4	REC47-89984Q5	REC46-96148T1	REC48752T	REC324351
80 HP (4-Cyl.)	1978-83	CAN	7110998-7208572		REC46-60367A1		REC47-89984T4	REC47-89984Q5	REC46-96148T1	REC48752T	REC324351
80 HP (3-Cyl.) (6)	1987	USA	0A996142-0C221999	REC12094		REC43055A4	REC47-43026Q02		REC817275A2		REC817275A2
80 HP (3-Cyl.) (6)	1987	BEL	9483121-9589038	REC12094		REC43055A4	REC47-43026Q02		REC817275A2		REC817275A2
80 HP (3-Cyl.) (5)	1987	USA	0A996142-0C221999 12094		REC43055A4	REC47-43026Q02	REC47-43026Q06	REC817275A2		REC8172761	
80 HP (3-Cyl.) (5)	1987	BEL	9483121-9589038	REC12094		REC43055A4	REC47-43026Q02	REC47-43026Q06	REC817275A2		REC8172761
80 Jet	1994-98	USA	0D283222 +	REC12094		REC43055A4	REC47-43026Q02	REC47-43026Q06	REC817275A2		REC8172761
80 Jet	1994-98	BEL	9793577 +	REC12094		REC43055A4	REC47-43026Q02	REC47-43026Q06	REC817275A2		REC8172761
850 E, EL (85 HP) (6-Cyl.)	1963-64		1460999-1567039				REC47-89984T4				
850 E-1, EL-1 (85 HP) (6-Cyl.) (11)	1963-64		1566240-1766823		REC46-60367A1		REC47-89984T4	REC47-89984Q5	REC46-96148T1		REC324351
850, 850 XS (85 HP) (4-Cyl.)	1973-77	USA	3493913-4590511		REC46-60367A1	-	REC47-89984T4	REC47-89984Q5	REC46-96148T1	REC48752T	REC324351
850, 850 XS (85 HP) (4-Cyl.)	1973-77	BEL	9011604-9139349		REC46-60367A1	-	REC47-89984T4	REC47-89984Q5	REC46-96148T1	REC48752T	REC324351
850, 850 XS (85 HP) (4-Cyl.)	1973-77	CAN	7010108-7091097		REC46-60367A1	-	REC47-89984T4	REC47-89984Q5	REC46-96148T1	REC48752T	REC324351
850 SX (85 HP) (4-Cyl.)	1973-77	USA	3493913-4831998		REC46-60367A1		REC47-89984T4	REC47-89984Q5	REC46-96148T1	REC48752T	REC324351
850 SX (85 HP) (4-Cyl.)	1976-77	AUS	8043775-8050199		REC46-60367A1		REC47-89984T4	REC47-89984Q5	REC46-96148T1	REC48752T	REC324351
850 SX (85 HP) (4-Cyl.)	1973-77	BEL	9011604-9177625		REC46-60367A1		REC47-89984T4	REC47-89984Q5	REC46-96148T1	REC48752T	REC324351
850 SX (85 HP) (4-Cyl.)	1973-77	CAN	7010108-7110997		REC46-60367A1		REC47-89984T4	REC47-89984Q5	REC46-96148T1	REC48752T	REC324351
850 SX (85 HP) (4-Cyl.)	1973-77	USA	3493913-4831998		REC46-60367A1		REC47-89984T4	REC47-89984Q5	REC46-96148T1	REC48752T	REC324351
850 SX (85 HP) (4-Cyl.)	1973-77	AUS	8043775-8050199		REC46-60367A1		REC47-89984T4	REC47-89984Q5	REC46-96148T1	REC48752T	REC324351
850 SX (85 HP) (4-Cyl.)	1973-77	BEL	9011604-9177625		REC46-60367A1		REC47-89984T4	REC47-89984Q5	REC46-96148T1	REC48752T	REC324351
850 SX (85 HP) (4-Cyl.)	1973-77	CAN	7010108-7110997		REC46-60367A1		REC47-89984T4	REC47-89984Q5	REC46-96148T1	REC48752T	REC324351

MODELO MODEL MODELLO	AÑO YEAR ANNO	PAIS COUNTRY PAESE	SERIE SERIAL SERIE	KIT BOMBA PUMP KIT KIT POMPA	KIT SUP. UPPER KIT KIT SUP.	BASE BASE BASE 	IMPULSOR IMPELLER GIRANTE 	KIT IMPULSOR IMPELLER KIT KIT GIRANTE	CUERPO HOUSING CORPO 	ACOPLE INOX. PUMP CUP CAPPUCIO INOX. 	TAPA WEAR PLATE COPERCHIO 
900 (90 HP) (6-Cyl.) (11)			1766824-1869775		REC46-60367A1		REC47-89984T4	REC47-89984Q5	REC46-96148T1		REC324351
90 HP (6-Cyl.)	1978-86	USA	4845301 +		REC46-60367A1		REC47-89984T4	REC47-89984Q5	REC46-96148T1	REC48752T	REC324351
90 HP (6-Cyl.)	1979-83	AUS	8060545 +		REC46-60367A1		REC47-89984T4	REC47-89984Q5	REC46-96148T1	REC48752T	REC324351
90 HP (6-Cyl.)	1978-86	CAN	7111698 +		REC46-60367A1		REC47-89984T4	REC47-89984Q5	REC46-96148T1	REC48752T	REC324351
90 HP (3-Cyl.) (6)	1987	USA	0A996142 +	REC12094		REC43055A4	REC47-43026Q02		REC817275A2		REC817275A2
90 HP (3-Cyl.) (6)	1987	BEL	9483121 +	REC12094		REC43055A4	REC47-43026Q02		REC817275A2		REC817275A2
90 HP (3-Cyl.) (5)	1987	USA	0A996142 +	REC12094		REC43055A4	REC47-43026Q02	REC47-43026Q06	REC817275A2		REC8172761
90 HP (3-Cyl.) (5)	1987	BEL	9483121 +	REC12094		REC43055A4	REC47-43026Q02	REC47-43026Q06	REC817275A2		REC8172761
115 (3-Cyl.) **Optimax**	-	USA	0T801000 +	REC12094		REC43055A4	REC47-43026Q02	REC47-43026Q06	REC817275A2		REC8172761
950 (95 HP) (6-Cyl.) (11)	1966-67		1869776-2318585		REC46-60367A1		REC47-89984T4	REC47-89984Q5	REC46-96148T1		REC324351
1000 (100 HP) (6-Cyl.)	1962-63		1464949-1503331		-	-	REC47-89984T4				
1000 (100 HP) (6-Cyl.) (11)	1962-65		1503332-2318585		REC46-60367A1		REC47-89984T4	REC47-89984Q5	REC46-96148T1		REC324351
1000 SS (E) (100 HP) (6-Cyl.) (1)	1962-65	USA	2318586-2413843		REC46-60367A1		REC47-89984T4	REC47-89984Q5	REC46-96148T1		REC324351
1000 SS (E) (100 HP) (6-Cyl.) (1)	1962-65	CAN	2320991-2321200		REC46-60367A1		REC47-89984T4	REC47-89984Q5	REC46-96148T1		REC324351
1000 SS (E) (100 HP) (6-Cyl.) (3)	1968-69	USA	2318586-2413843		REC46-60367A1		REC47-89984T4	REC47-89984Q5	REC46-96148T1	REC48752T	REC324351
1000 SS (E) (100 HP) (6-Cyl.) (3)	1968-69	CAN	2320991-2321200		REC46-60367A1		REC47-89984T4	REC47-89984Q5	REC46-96148T1	REC48752T	REC324351
1000 SS (E-1) (100 HP) (6-Cyl.)	1968-69	USA	2484633-2836018		REC46-60367A1		REC47-89984T4	REC47-89984Q5	REC46-96148T1		REC324351
1000 SS (E-1) (100 HP) (6-Cyl.) (1)	1968-69	CAN	2487363-2836018		REC46-60367A1		REC47-89984T4	REC47-89984Q5	REC46-96148T1		REC324351
1000 SS (E-1) (100 HP) (6-Cyl.) (3)	1968-69	USA	2484633-2836018		REC46-60367A1		REC47-89984T4	REC47-89984Q5	REC46-96148T1	REC48752T	REC324351
1000 SS (E-1) (100 HP) (6-Cyl.) (3)	1968-69	CAN	2487363-2836018		REC46-60367A1		REC47-89984T4	REC47-89984Q5	REC46-96148T1	REC48752T	REC324351
1000 BP (100 HP) (6-Cyl.)	1968-69		2399698-3253111			-	REC47-89984T4				
100 HP (4-Cyl.) (6)	1988-98	USA	0B209468 +	REC12094		REC43055A4	REC47-43026Q02		REC817275A2		REC817275A2
100 HP (4-Cyl.) (6)	1988-98	BEL	9523034 +	REC12094		REC43055A4	REC47-43026Q02		REC817275A2		REC817275A2
100 HP (4-Cyl.) (5)	1988-98	USA	0B209468 +	REC12094		REC43055A4	REC47-43026Q02	REC47-43026Q06	REC817275A2		REC8172761
100 HP (4-Cyl.) (5)	1988-98	BEL	9523034 +	REC12094		REC43055A4	REC47-43026Q02	REC47-43026Q06	REC817275A2		REC8172761
105 Jet	1994-95	USA	0D082000 +		REC46-60367A1	REC46-8M0077147	REC47-89984T4	REC47-89984Q5	REC46-96148T1	REC48752T	REC324351
105 Jet	1994-95	BEL	9682500 +		REC46-60367A1	REC46-8M0077147	REC47-89984T4	REC47-89984Q5	REC46-96148T1	REC48752T	REC324351
1100 (110 HP) (6-Cyl.) (1)	1966-67		1870204-2314955		REC46-60367A1		REC47-89984T4	REC47-89984Q5	REC46-96148T1		REC324351
1100 (110 HP) (6-Cyl.) (3)	1966-67		1870204-2314955		REC46-60367A1		REC47-89984T4	REC47-89984Q5	REC46-96148T1	REC48752T	REC324351
1150 (115 HP) (6-Cyl.)	1970-77	USA	2836019-4112634		REC46-60367A1	REC43055A4	REC47-89984T4	REC47-89984Q5	REC46-96148T1	REC48752T	REC324351
1150 (115 HP) (6-Cyl.)	1973-77	AUS	8008665-8027114		REC46-60367A1	REC43055A4	REC47-89984T4	REC47-89984Q5	REC46-96148T1	REC48752T	REC324351
1150 (115 HP) (6-Cyl.)	1973-77	CAN	7010763-7047257		REC46-60367A1	REC43055A4	REC47-89984T4	REC47-89984Q5	REC46-96148T1	REC48752T	REC324351
1150 (115 HP) (6-Cyl.)	1973-77	USA	4112635-4394236		REC46-60367A1		REC47-89984T4	REC47-89984Q5	REC46-96148T1	REC48752T	REC324351
1150 (115 HP) (6-Cyl.)	1973-77	AUS	8027115-8027439		REC46-60367A1		REC47-89984T4	REC47-89984Q5	REC46-96148T1	REC48752T	REC324351
1150 (115 HP) (6-Cyl.)	1973-77	CAN	7047258-7075522		REC46-60367A1		REC47-89984T4	REC47-89984Q5	REC46-96148T1	REC48752T	REC324351
115 HP (6-Cyl.)	1973-88	USA	4394237 +		REC46-60367A1		REC47-89984T4	REC47-89984Q5	REC46-96148T1	REC48752T	REC324351
115 HP (6-Cyl.)	1973-83	AUS	8027440 +		REC46-60367A1		REC47-89984T4	REC47-89984Q5	REC46-96148T1	REC48752T	REC324351
115 HP (6-Cyl.)	1973-88	CAN	7075523 +		REC46-60367A1		REC47-89984T4	REC47-89984Q5	REC46-96148T1	REC48752T	REC324351
115 HP (4-Cyl.) (6)	1989-98	USA	0C100000 +	REC12094		REC43055A4	REC47-43026Q02		REC817275A2		REC817275A2
115 HP (4-Cyl.) (6)	1989-98	BEL	9559771 +	REC12094		REC43055A4	REC47-43026Q02		REC817275A2		REC817275A2
115 HP (4-Cyl.) (5)	1989-98	USA	0C100000 +	REC12094		REC43055A4	REC47-43026Q02	REC47-43026Q06	REC817275A2		REC8172761
115 HP (4-Cyl.) (5)	1989-98	BEL	9559771 +	REC12094		REC43055A4	REC47-43026Q02	REC47-43026Q06	REC817275A2		REC8172761
115 (3-Cyl.) **Optimax**	-	USA	0T801000 +	REC12094		REC43055A4	REC47-43026Q02	REC47-43026Q06	REC817275A2		REC8172761
1250 (125 HP) (6-Cyl.) (2)	1968-69		2314956-2839368		REC46-60367A1		REC47-89984T4	REC47-89984Q5	REC46-96148T1		REC324351
1250 (125 HP) (6-Cyl.) (4)	1968-69		2314956-2839368		REC46-60367A1		REC47-89984T4	REC47-89984Q5	REC46-96148T1	REC48752T	REC324351
1250 BP (125 HP) (6-Cyl.)	1968-69		2400058-3253111				REC47-89984T4				
125 HP (4-Cyl.) (6)	1994-98	USA	0D283222 +	REC12094		REC43055A4	REC47-43026Q02		REC817275A2		REC817275A2
125 HP (4-Cyl.) (6)	1994-98	BEL	9793577 +	REC12094		REC43055A4	REC47-43026Q02		REC817275A2		REC817275A2
125 HP (4-Cyl.) (5)	1994-98	USA	0D283222 +	REC12094		REC43055A4	REC47-43026Q02	REC47-43026Q06	REC817275A2		REC8172761
125 HP (4-Cyl.) (5)	1994-98	BEL	9793577 +	REC12094		REC43055A4	REC47-43026Q02	REC47-43026Q06	REC817275A2		REC8172761
1350 (6-Cyl.)	1970-71	USA	2839369-3293233		REC46-60367A1		REC47-89984T4	REC47-89984Q5	REC46-96148T1	REC48752T	REC324351
1400 (140 HP) (6-Cyl.)	1972		3293234-3502805		REC46-60367A1		REC47-89984T4	REC47-89984Q5	REC46-96148T1	REC48752T	REC324351
1400 (140 HP) (6-Cyl.)	1978-81	USA	4865678 +		REC46-60367A1		REC47-89984T4	REC47-89984Q5	REC46-96148T1	REC48752T	REC324351
1400 (140 HP) (6-Cyl.)	1978-81	AUS	8052650 +		REC46-60367A1		REC47-89984T4	REC47-89984Q5	REC46-96148T1	REC48752T	REC324351
1400 (140 HP) (6-Cyl.)	1978-81	CAN	7112773 +		REC46-60367A1		REC47-89984T4	REC47-89984Q5	REC46-96148T1	REC48752T	REC324351
1500 (6-Cyl.)	1973-77	USA	3502806-4121434		REC46-60367A1		REC47-89984T4	REC47-89984Q5	REC46-96148T1	REC48752T	REC324351
1500 (6-Cyl.)	1973-77	AUS	8005615-8028039		REC46-60367A1		REC47-89984T4	REC47-89984Q5	REC46-96148T1	REC48752T	REC324351
1500 (6-Cyl.)	1973-77	CAN	7010533-7048782		REC46-60367A1		REC47-89984T4	REC47-89984Q5	REC46-96148T1	REC48752T	REC324351

MODELO MODEL MODELLO	AÑO YEAR ANNO	PAIS COUNTRY PAESE	SERIE SERIAL SERIE	KIT BOMBA PUMP KIT KIT POMPA	KIT SUP. UPPER KIT KIT SUP.	BASE BASE BASE 	IMPULSOR IMPELLER GIRANTE 	KIT IMPULSOR IMPELLER KIT KIT GIRANTE	CUERPO HOUSING CORPO 	ACOPLE INOX. PUMP CUP CAPPUCIO INOX. 	TAPA WEAR PLATE COPERCHIO 
1500 (6-Cyl.) (9)	1973-77	USA	4121435-4865677		REC46-60367A1		REC47-89984T4	REC47-89984Q5	REC46-96148T1	REC48752T	REC324351
1500 (6-Cyl.) (9)	1973-77	AUS	8028040-8052649		REC46-60367A1		REC47-89984T4	REC47-89984Q5	REC46-96148T1	REC48752T	REC324351
1500 (6-Cyl.) (9)	1973-77	CAN	7048783-7112772		REC46-60367A1		REC47-89984T4	REC47-89984Q5	REC46-96148T1	REC48752T	REC324351
1500 (6-Cyl.) (10)	1973-77	USA	4121435-4865677		REC46-60367A1		REC47-89984T4	REC47-89984Q5	REC46-96148T1	REC48752T	REC324351
1500 (6-Cyl.) (10)	1973-77	AUS	8028040-8052649		REC46-60367A1		REC47-89984T4	REC47-89984Q5	REC46-96148T1	REC48752T	REC324351
1500 (6-Cyl.) (10)	1973-77	CAN	7048783-7112772		REC46-60367A1		REC47-89984T4	REC47-89984Q5	REC46-96148T1	REC48752T	REC324351
1500 XS (6-Cyl.)	1978	USA	4868648-5327662		REC46-60367A1		REC47-89984T4	REC47-89984Q5	REC46-96148T1	REC48752T	REC324351
V-135 Carb.	1986-88	USA	0A904646 +		REC46-60367A1	REC46-8M0077147	REC47-89984T4	REC47-89984Q5	REC46-96148T1	REC48752T	REC324351
V-135 DFI	1998	USA	0G590000 +		REC46-60367A1	REC46-8M0077147	REC47-89984T4	REC47-89984Q5	REC46-96148T1	REC48752T	REC324351
140 Jet	1994-95	USA	0D082000 +		REC46-60367A1	REC46-8M0077147	REC47-89984T4	REC47-89984Q5	REC46-96148T1	REC48752T	REC324351
140 Jet	1994-95	BEL	9682500 +		REC46-60367A1	REC46-8M0077147	REC47-89984T4	REC47-89984Q5	REC46-96148T1	REC48752T	REC324351
V-150 Carb. (8)	1978-85	USA	4868998-0A904645		REC46-60367A1	REC46-96146A6	REC47-89984T4	REC47-89984Q5	REC46-96148T1	REC48752T	REC324351
V-150 Carb. (7)	1978-85	USA	4868998-0A904645		REC46-60367A1	REC46-8M0077147	REC47-89984T4	REC47-89984Q5	REC46-96148T1	REC48752T	REC324351
V-150 Carb. EFI & DFI	1986-88	USA	0A904646 +		REC46-60367A1	REC46-8M0077147	REC47-89984T4	REC47-89984Q5	REC46-96148T1	REC48752T	REC324351
V-150 XR2, 4, 6, Mag.II, III (8)	1978-88	USA	4868998 +		REC46-60367A1	REC46-96146A6	REC47-89984T4	REC47-89984Q5	REC46-96148T1	REC48752T	REC324351
V-150 XR2, 4, 6, Mag.II, III (7)	1978-88	USA	4868998 +		REC46-60367A1	REC46-8M0077147	REC47-89984T4	REC47-89984Q5	REC46-96148T1	REC48752T	REC324351
V-1750, 175 (8)	1976-81	USA	4301235-6618750		REC46-60367A1	REC46-96146A6	REC47-89984T4	REC47-89984Q5	REC46-96148T1	REC48752T	REC324351
V-1750, 175 (8)	1980-81	AUS	8064250 +		REC46-60367A1	REC46-96146A6	REC47-89984T4	REC47-89984Q5	REC46-96148T1	REC48752T	REC324351
V-1750, 175 (7)	1976-81	USA	4301235-6618750		REC46-60367A1	REC46-8M0077147	REC47-89984T4	REC47-89984Q5	REC46-96148T1	REC48752T	REC324351
V-1750, 175 (7)	1980-81	AUS	8064250 +		REC46-60367A1	REC46-8M0077147	REC47-89984T4	REC47-89984Q5	REC46-96148T1	REC48752T	REC324351
V-175 Carb., EFI & DFI	1985-88	USA	6618751 +		REC46-60367A1	REC46-8M0077147	REC47-89984T4	REC47-89984Q5	REC46-96148T1	REC48752T	REC324351
V-200 (8)	1978-84	USA	4839034-6625220		REC46-60367A1	REC46-96146A6	REC47-89984T4	REC47-89984Q5	REC46-96148T1	REC48752T	REC324351
V-200 (8)	1980-81	AUS	8061595-8065672		REC46-60367A1	REC46-96146A6	REC47-89984T4	REC47-89984Q5	REC46-96148T1	REC48752T	REC324351
V-200 (7)	1978-84	USA	4839034-6625220		REC46-60367A1	REC46-8M0077147	REC47-89984T4	REC47-89984Q5	REC46-96148T1	REC48752T	REC324351
V-200 (7)	1980-81	AUS	8061595-8065672		REC46-60367A1	REC46-8M0077147	REC47-89984T4	REC47-89984Q5	REC46-96148T1	REC48752T	REC324351
V-200 Carb. & EFI (2.5L)	1985-88	USA	6625221 +		REC46-60367A1	REC46-8M0077147	REC47-89984T4	REC47-89984Q5	REC46-96148T1	REC48752T	REC324351
V-200 EFI (3.0L)		USA	0T750164 +	REC817275A6		REC807929A1	REC47-43026Q02	REC47-43026Q06	REC817275A1		REC8172761
V-200 DFI (3.0L)	1997	USA	0G386496-0G589999		REC817275A6	REC807929A1	REC47-43026Q02	REC47-43026Q06	REC817275A1		REC8172761
V-200 DFI (3.0L)	1998	USA	0G590000 +			REC807929A1	REC47-43026Q02	REC47-43026Q06	REC817275A1		REC8172761
V-220 Laser	1987-88	USA	0B117316 +		REC46-60367A1	REC46-8M0077147	REC47-89984T4	REC47-89984Q5	REC46-96148T1	REC48752T	REC324351
V-225 (2.4L) (8)	1980-81	USA	5628028 +		REC46-60367A1	REC46-96146A6	REC47-89984T4	REC47-89984Q5	REC46-96148T1	REC48752T	REC324351
V-225 (2.4L) (7)	1980-81	USA	5628028 +		REC46-60367A1	REC46-8M0077147	REC47-89984T4	REC47-89984Q5	REC46-96148T1	REC48752T	REC324351
V-225 (3.0L) Carb. & EFI	1994-98	USA	0D280813 +			REC807929A1	REC47-43026Q02	REC47-43026Q06	REC817275A1		REC8172761
V-225 DFI	1998	USA	0G590000 +			REC807929A1	REC47-43026Q02	REC47-43026Q06	REC817275A1		REC8172761
V-250 (3.0L) EFI	1995-98	USA	0G129222 +			REC807929A1	REC47-43026Q02	REC47-43026Q06	REC817275A1		REC8172761
MARK 5	-		574128-786612				REC47-22748				
MARK 6, 6A	-		888005 +				REC47-22748				
MARK 50	-		Todas / All / Tutti				REC47-89983T				
MARK 55	-		831021 +				REC47-89983T				
MARK 55A	-		1227131 +				REC47-89983T				
MARK 58 (E)	-		1139538 +				REC47-89983T				

GUÍA BOMBAS AGUA
WATER PUMP GUIDE
GUIDA POMPA ACQUA

MARINER

MODELO MODEL MODELLO	CÓDIGO CODE CÓDICE	SERIE SERIAL SERIE	IMPULSOR IMPELLER GIRANTE 	ACOPLE INOX. PUMP CUP CAPPUCIO INOX 	KIT BOMBA PUMP SET KIT POMPA	KIT COMPLETO COMPLET SET KIT COMPLETO
2A	646	Todas / All / Tutti	**REC646-44352-01**			
2B	6A1	Todas / All / Tutti	**REC646-44352-01**			
4A	6,00E+000	Todas / All / Tutti	**REC6E0-44352-00**			
5C	6,00E+003	Todas / All / Tutti	**REC6E0-44352-00**			
6C	6H8	Todas / All / Tutti	**REC6G1-44352-00**			
6D	6H6	Todas / All / Tutti	**REC6G1-44352-00**			
8A(M)	655	000000-000300	**REC662-44352-01**			
8A(ML)	655	000000-300101	**REC662-44352-01**			
8B(M)	677	000101 +	**REC662-44352-01**			
8B(ML)	677	300101 +	**REC662-44352-01**			

MODELO MODEL MODELLO	CÓDIGO CODE CÓDICE	SERIE SERIAL SERIE	IMPULSOR IMPELLER GIRANTE	ACOPLE INOX. PUMP CUP CAPPUCIO INOX	KIT BOMBA PUMP SET KIT POMPA	KIT COMPLETO COMPLET SET KIT COMPLETO
8C	6G1	Todas / All / Tutti	REC6G1-44352-00			
9.9C	682	Todas / All / Tutti	REC682-44352-01		REC682-W0078-A1	
15A(M)	651	- 000285	REC662-44352-01			
15A(ML)	651	- 3000100	REC662-44352-01			
15C	684	Todas / All / Tutti	REC682-44352-01		REC682-W0078-A1	
20C(M)	6A9	000101-005810	REC689-44352-02		REC689-W0078-04	
20C(ML)	6A9	300101-306542	REC689-44352-02		REC689-W0078-04	
20C(E)	6A9	250101-250819	REC689-44352-02		REC689-W0078-04	
20C(EL)	6A9	550101-550693	REC689-44352-02		REC689-W0078-04	
20C(M)	6A9	010112 +	REC689-44352-02	REC689-W4432-01		REC689-W0078-A6
20C(ML)	6A9	306543 +	REC689-44352-02	REC689-W4432-01		REC689-W0078-A6
20C(E)	6A9	250820 +	REC689-44352-02	REC689-W4432-01		REC689-W0078-A6
20C(EL)	6A9	550694 +	REC689-44352-02	REC689-W4432-01		REC689-W0078-A6
25C(M)	695	000101-014870	REC689-44352-02			REC689-W0078-A6
25C(ML)	695	000000-312185	REC689-44352-02			REC689-W0078-A6
25C(E)	695	000000-252290	REC689-44352-02			REC689-W0078-A6
25C(EL)	695	000000-553575	REC689-44352-02			REC689-W0078-A6
25C(M)	695	014871 +	REC689-44352-02	REC689-W4432-01		REC689-W0078-A6
25C(ML)	695	312186 +	REC689-44352-02	REC689-W4432-01		REC689-W0078-A6
25C(E)	695	252291 +	REC689-44352-02	REC689-W4432-01		REC689-W0078-A6
25C(EL)	695	553576 +	REC689-44352-02	REC689-W4432-01		REC689-W0078-A6
28	664	Todas / All / Tutti	REC689-44352-02			
30	689	Todas / All / Tutti	REC689-44352-02			
30A(M)	689	000366-014805	REC689-44352-02			REC689-W0078-A6
30A(ML)	689	301911-315315	REC689-44352-02			REC689-W0078-A6
30A(E)	689	100251-103275	REC689-44352-02			REC689-W0078-A6
30A(EL)	689	401216-407815	REC689-44352-02			REC689-W0078-A6
30A(M)	689	022059 +	REC689-44352-02	REC689-W4432-01		REC689-W0078-A6
30A(ML)	689	321377 +	REC689-44352-02	REC689-W4432-01		REC689-W0078-A6
30A(E)	689	105325 +	REC689-44352-02	REC689-W4432-01		REC689-W0078-A6
30A(EL)	689	411947 +	REC689-44352-02	REC689-W4432-01		REC689-W0078-A6
48/48W	670	Todas / All / Tutti	REC6H3-44352-00	REC663-44322-00	REC663-W0078-01	
55/W55	663	Todas / All / Tutti	REC6H3-44352-00	REC663-44322-00	REC663-W0078-01	
60	675, 6F0	Todas / All / Tutti	REC6H3-44352-00	REC663-44322-00	REC663-W0078-01	

KITS RETENES
SEAL KIT
KIT TENUTE

Ref.	R.O.
REC26-77066A1	26-77066A1

MOTORES / ENGINES / MOTORI
4 / 4.5 / 45 (1 cyl)
7.5 / 9.8 HP



Ref.	R.O.
REC26-41365A3	26-41365A3

MOTORES / ENGINES / MOTORI
6 - 15 HP
(2 & 4 Tiempos / 2 & 4 Strokes / 2 & 4 Tempi)



Ref.	R.O.
REC26-85090A2	26-85090A2

MOTORES / ENGINES / MOTORI
8 - 55 HP
(2 & 4 Tiempos / 2 & 4 Strokes / 2 & 4 Tempi)

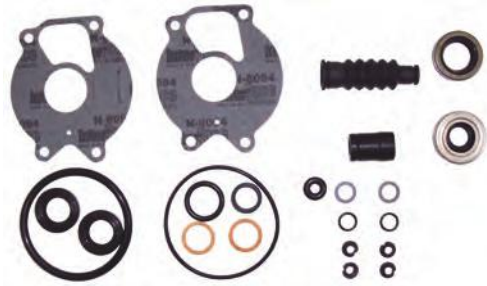

Ref.	R.O.
REC26-85090A1	26-85090A1

MOTORES / ENGINES / MOTORI
18 / 25 HP



Ref.	R.O.
REC823547A2	823547A2

MOTORES / ENGINES / MOTORI
25 - 50 HP
(2 & 4 Tiempos / 2 & 4 Strokes / 2 & 4 Tempi)



Ref.	R.O.
REC26-814669A2	26-814669A2

MOTORES / ENGINES / MOTORI
30 - 60 HP
(2 & 4 Tiempos / 2 & 4 Strokes / 2 & 4 Tempi)



Ref.	R.O.
REC26-79831A1	26-79831A1

MOTORES / ENGINES / MOTORI
30 Jet
35 - 70 HP



Ref.	R.O.
REC26-43035A4	26-43035A4

MOTORES / ENGINES / MOTORI
30 - 125 HP
(2 & 4 Tiempos / 2 & 4 Strokes / 2 & 4 Tempi)



Ref.	R.O.
REC26-820645A1	26-820645A1

MOTORES / ENGINES / MOTORI
40 / 50 HP (1992-94)

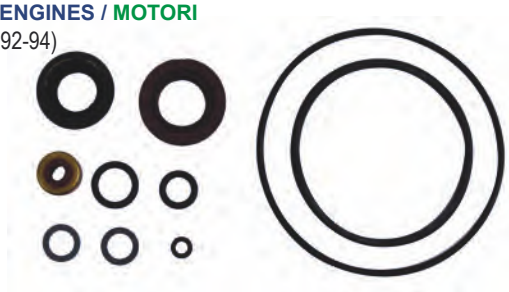

Ref.	R.O.
REC26-55682A1	26-55682A1

MOTORES / ENGINES / MOTORI
75 - V225 HP

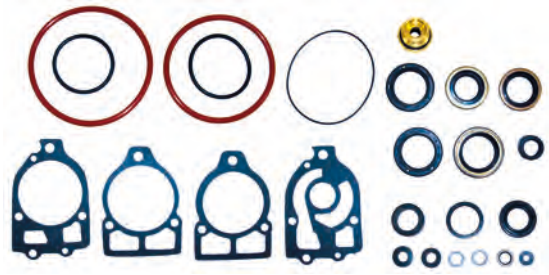

Ref.	R.O.
REC26-89238A2	26-89238A2

MOTORES / ENGINES / MOTORI
105 / 140 Jet
150 / 1475 ProXS
V-115 - V-220 (EFI / DFI)
XR-4 / XR-6



Ref.	R.O.
REC26-66303A1	26-66303A1

MOTORES / ENGINES / MOTORI
200 / 20 HP



Ref.	R.O.
REC26-816575A5	26-816575A5

MOTORES / ENGINES / MOTORI
200 - 250 HP (DFI / EFI) (3.0L)
Race Outboard (3.0L EFI)



Ref.	R.O.
REC26-816575A4	26-816575A4

MOTORES / ENGINES / MOTORI
200 - 250 HP (DFI / EFI)
Race Outboard 225 - 300 (2.5 & 3.0L)

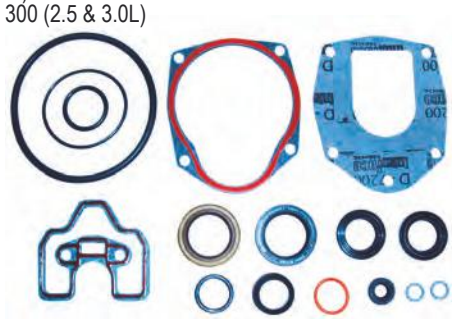

GUÍA KITS RETENES COLA
GEARCASE SEAL KITS APPLICATION
GUIDA KIT TENUTE PIEDE

MODELO MODEL MODELLO	PAÍS COUNTRY PAESE	SERIE SERIAL SERIE	KIT
4 (1 cyl.)	USA	5595532 - 0A809600	REC26-77066A1
	BEL	9258281 - 9477829	REC26-77066A1
4.5 (1 cyl.)	USA	4107220 +	REC26-77066A1
	BEL	9072179 +	REC26-77066A1
6	USA	0A197112 +	REC26-41365A3
	BEL	9461526 +	REC26-41365A3
7.5 (7.5, 75)	USA	4851693 +	REC26-77066A1
	BEL	9181726 +	REC26-77066A1
8	USA	0A197112 +	REC26-41365A3
	BEL	9461526 +	REC26-41365A3
8 Bodense 4 Tiempos / 4 Strokes / 4 Tempi	USA	0H00058 - 0H017349	REC26-41365A3
8 Bodense 4 Tiempos / 4 Strokes / 4 Tempi	USA	0G760300 +	REC26-41365A3
9.8 (9.8, 110)	USA	4839254 +	REC26-77066A1
	BEL	9165303 +	REC26-77066A1
9.9	USA	0A197112 +	REC26-41365A3
	BEL	9461526 +	REC26-41365A3
9.9 4 Tiempos / 4 Strokes / 4 Tempi	USA	0H00058 - 0H017349	REC26-41365A3
9.9 4 Tiempos / 4 Strokes / 4 Tempi	USA	0G760300 +	REC26-41365A3
10 (XR10/SEA PRO 10)	USA	0D038000 +	REC26-41365A3
	BEL	9596000 +	REC26-41365A3
10 Magnum / Marathon	USA	0D038000 +	REC26-41365A3
	BEL	9596000 +	REC26-41365A3
15 (15, 15 Sea Pro / Marathon)	USA	0B292414 +	REC26-41365A3
	BEL	9927000 +	REC26-41365A3
15 XD Sea Pro / Marathon	BEL	9927000 +	REC26-85090A2
15 (Super 15)	USA	0B238464 +	REC26-85090A2
	BEL	9507381 +	REC26-85090A2
18	USA	5837437 - 6443972	REC26-85090A1
	BEL	9308306 - 9415100	REC26-85090A1
18 (18XD)	USA	6443973 +	REC26-85090A2
	BEL	9378151 +	REC26-85090A2
20 (20, 200)	USA	4709593 - 6443972	REC26-66303A1
	BEL	9157230 - 9415100	REC26-66303A1
20 (20, 20XD)	USA	6443973 +	REC26-85090A2
	BEL	9415101 +	REC26-85090A2
25	USA	5705532 - 6443972	REC26-85090A1
	BEL	9315316 - 9415100	REC26-85090A1
25 (25, 25XD)	USA	6416713 +	REC26-85090A2
	BEL	9378116 +	REC26-85090A2
25 LIGHTNING (3 cyl.)	USA	0E268781 +	REC26-85090A2
25 4 Tiempos / 4 Strokes / 4 Tempi	USA	0G590000 +	REC823547A2
30 (2 cyl.) (644cc)	USA	0G053314 +	REC823547A2
35 (2 cyl.)	USA	6445653 +	REC26-79831A1
	BEL	9384476 +	REC26-79831A1
40 (40, 402) (2 cyl.)	USA	4860103 - 0G053313	REC26-79831A1
	BEL	9184451 +	REC26-79831A1
40 (2 cyl.) (644cc)	USA	0G053314 +	REC823547A2
40 (4 cyl.)	USA	0C159200 +	REC26-79831A1
	BEL	9570790 +	REC26-79831A1
40 (3 cyl.)	USA	0G531301 +	REC823547A2
	BEL	9973100 +	REC823547A2
40 4-Tiempos / Strokes / Tempi (No Big Foot)	USA	0G231123 +	REC823547A2
45 (4 cyl.)	USA	5531630 +	REC26-79831A1
	BEL	9248006 +	REC26-79831A1
45 BODENSEE (No Big Foot) 4-Tiempos / Strokes / Tempi	USA	0G231123 +	REC823547A2
50 (500) (4 cyl.)	USA	4357640 +	REC26-79831A1
	BEL	9107214 +	REC26-79831A1
50 (3 cyl.)	USA	6428681 - 0D000749	REC26-79831A1
	BEL	9385911 - 9683054	REC26-79831A1
50 (3 cyl.)	USA	0D000750 - 0G589999	REC26-814669A2
	BEL	9683055 - 9973099	REC26-814669A2
50 (3 cyl.)	USA	0G590000 +	REC823547A2
	BEL	9973100 +	REC823547A2
50 (No Big Foot) 4-Tiempos / Strokes / Tempi	USA	0G231123 +	REC823547A2
50 (Big Foot) 4-Tiempos / Strokes / Tempi	USA	0G231123 +	REC26-43035A4
55 (3 cyl.)	USA	0D000750 +	REC26-814669A2
	BEL	9683055 +	REC26-814669A2
60 (3 cyl.)	USA	6428681 - 0D000749	REC26-79831A1
	BEL	9385911 - 9683054	REC26-79831A1
60 (3 cyl.) (No Big Foot)	USA	0D000750 +	REC26-814669A2
	BEL	9683055 +	REC26-814669A2
60 (3 cyl.) (Big Foot)	USA	0D000750 +	REC26-43035A4
	BEL	9683055 +	REC26-43035A4
70 (3 cyl.)	USA	4571652 - 0A996141	REC26-79831A1
	BEL	9135825 - 9385910	REC26-79831A1
70 (3 cyl.)	USA	0A996142 +	REC26-43035A4
	BEL	9483121 +	REC26-43035A4
75 (3 cyl.)	USA	0C222000 +	REC26-43035A4
	BEL	9589039 +	REC26-43035A4
75 (4 cyl.)	USA	6432901 +	REC26-55682A1
	BEL	9393856 +	REC26-55682A1
80 (80, 800) (4 cyl.)	USA	4831999 - 6432900	REC26-55682A1
	BEL	9177626 - 9393855	REC26-55682A1
80 (3 cyl.)	USA	0A996142 +	REC26-43035A4
	BEL	9483121 +	REC26-43035A4
90 (90, 900) (6 cyl.)	USA	4845301 +	REC26-55682A1
90 (3 cyl.)	USA	0A996142 +	REC26-43035A4
	BEL	9483121 +	REC26-43035A4
100 (4 cyl.)	USA	0B209468 +	REC26-43035A4
	BEL	9523034 +	REC26-43035A4
115 (115, 1150) (6 cyl.)	USA	4855153 +	REC26-55682A1
115 (4 cyl.)	USA	0C100000 +	REC26-43035A4
	BEL	9559771 +	REC26-43035A4
125 (4 cyl.)	USA	0D283222 +	REC26-43035A4
	BEL	9793577 +	REC26-43035A4
140 (140, 1400) (6 cyl.)	USA	4865678 +	REC26-55682A1
V-135	USA	0A904646 - 0C239552	REC26-89238A2
V-135	USA	0C239553 +	REC26-89238A2
V-135 DFI	USA	0G590000 +	REC26-89238A2
V-150 (150, 1500)	USA	4868998 - 0A904645	REC26-55682A1
V-150 (CARB)	USA	0A904646 +	REC26-89238A2
V-150 (XR4/MAGNUM II)	USA	0B242885 - 0C239552	REC26-89238A2
V-150 (XR4)	USA	0C239553 - 0D081999	REC26-89238A2
V-150 (XR6/MAGNUM III)	USA	0D082000 +	REC26-89238A2
V-150 EFI	USA	0D082000 +	REC26-89238A2
V-150 DFI	USA	0G590000 +	REC26-89238A2
V-175 (175, 1750)	USA	4301235 - 6618750	REC26-55682A1
V-175 (CARB, EFI)	USA	6618751 +	REC26-89238A2
V-200 (200, 2000)	USA	4839034 - 6625220	REC26-55682A1
V-200 (CARB, EFI)	USA	6625221 - 6203990	REC26-89238A2
V-200 DFI (3.0L)	USA	0G386496 +	REC26-816575A5
V-220	USA	0B117316 +	REC26-89238A2
V-225	USA	5628028 +	REC26-55682A1
V-225 (3.0L) (C-2)	USA	0D280813 +	REC26-816575A5
V-225 (3.0L) (C-3)	USA	0D280813 +	REC26-816575A4
V-225 (3.0L) (Sea Pro, Marathon) (C-2)	USA	0G245605 +	REC26-816575A5
V-225 (3.0L) (Sea Pro, Marathon) (C-3)	USA	0G245605 +	REC26-816575A4
V-225 EFI (3.0L)	USA	0G129222 +	REC26-816575A5
V-225 DFI (3.0L)	USA	0G590000 +	REC26-816575A5
V-250 EFI (3.0L)	USA	0G129222 +	REC26-816575A5

GUÍA RETENES ACEITE
OIL SEAL APPLICATION
GUIDA KIT PARAOLIO

MODELO MODEL MODELLO	SERIE SERIAL SERIE	INTERIOR HÉLICE INNER PROP INTERNO ÉLICA	EXTERIOR HÉLICE OUTTER PROP ESTERNO ÉLICA	BASE BOMBA SUPERIOR UPPER WATER PUMP BASE POMPA SUPERIORE	BASE BOMBA INFERIOR LOWER WATER PUMP BASE POMPA INFERIORE	CUERPO BOMBA PUMP HOUSTING CORPO POMPA	EJE CAMBIO SHIFT SHAFT ASSE CAMBIO
3.5,3.6	5404657 +			REC26-897153		REC26-30913	
3.9	1655013 - 2498135					REC26-30913	
4	2498136 - 5569201					REC26-30913	
4	5569202 - 5595531			REC26-897153		REC26-30913	
4,4.5	5595532 - A809601			REC26-897153		REC26-30913	
6	1408611 - 2529894					REC26-30913	
7.5	2529895 - 3801457					REC26-30913	
7.5	3801458 - 5206549					REC26-30913	
7.5	5206550 +			REC26-897153		REC26-30913	
9.8	1470349 - 3795657					REC26-30913	
9.8	3795658 - 5206549					REC26-30913	
9.8	5206550 +			REC26-897153		REC26-30913	
18	5837437 - 6443972			REC26-33467	REC26-33467		
20	1558310 - 1866494			REC26-33467		REC908855	
20	1866495 - 6443972			REC908855	REC26-33467	REC908855	
25	5705532 - 6443972			REC26-33467	REC26-33467		
30	1271885 - 1356947	REC26-90562		REC26-90562			REC26-8164641
30	G055314 +	REC26-69188	REC26-69189				
MK35A	1217222 - 1271884	REC26-90562	REC26-90562				REC26-8164641
35	1356948 - 1448139	REC26-90562		REC26-90562			REC26-8164641
35	1571114 - 1960826	REC26-90562		REC26-90562			REC26-8164641
35	1960827 - 2874703	REC26-90562		REC26-90562	REC26-79831		REC26-8164641
35	6445653 +	REC26-69188		REC26-90562	REC26-79831		REC26-8164641
40	1279685 - 2874703	REC26-90562		REC26-90562			REC26-8164641
40	2874704 - 3336257	REC26-56788		REC26-90562	REC26-79831		REC26-8164641
40	3338258 - 4117709	REC26-56788		REC26-90562	REC26-79831		REC26-24590
40	4117710 - 4860102	REC26-69188	REC26-69189	REC26-90562	REC26-79831		REC26-8164641/ REC26-24590
40	4880103 - 6445652	REC26-69188	REC26-69189	REC26-90562	REC26-79831		REC26-8164641
40 (4 Cyl)	C159200 - G053313	REC26-69188	REC26-69189	REC26-90562	REC26-79831		REC26-8164641
40 (2 Cyl)	G055314 +	REC26-69188	REC26-69189				
45	1476510 - 1531568	REC26-90562		REC26-90562			REC26-8164641
45 (4 Cyl)	5531630 +	REC26-69188	REC26-69189	REC26-90562	REC26-79831		REC26-8164641
50	1421113 - 1639472	REC26-90562		REC26-90562			REC26-8164641
50	1639473 - 1770178	REC26-90562		REC26-90562			REC26-8164641
50	1770179 - 2305100	REC26-90562		REC26-90562	REC26-79831		REC26-8164641
50	2305101 - 2858813	REC26-90562		REC26-90562	REC26-79831		REC26-24590
50	2858814 - 4140999	REC26-56788		REC26-90562	REC26-79831		REC26-8164641/ REC26-24590
50	4141000 - 4962055	REC26-69188	REC26-69189	REC26-90562	REC26-79831		REC26-8164641/ REC26-24590
50	4962056 - 5531630	REC26-69188	REC26-69189	REC26-90562	REC26-79831		REC26-8164641
50 (3 Cyl)	6428681 - D000750	REC26-69188	REC26-69189	REC26-90562	REC26-79831		REC26-8164641
50-60 (3 C)	D00075 +	REC26-69188	REC26-69189			REC26-8164641	
60	1303411 - 1542744			REC26-90562			
60	6428681 - D000750	REC26-69188	REC26-69189	REC26-90562	REC26-79831		REC26-8164641
65	1542745 - 2874263	REC26-76868	REC26-76868	REC26-94038		REC26-16977	REC26-8164641
65	2874263 - 3293183	REC26-76868		REC26-94038	REC26-55682	REC26-16977	REC26-8164641/ REC26-24590
65 (3 Cyl)	3293164 - 4138684	REC26-56788		REC26-90562	REC26-79831		REC26-8164641/ REC26-24590
65 (3 Cyl)	4136685 - 4571651	REC26-69188	REC26-69189	REC26-90562	REC26-79831		REC26-8164641/ REC26-24590
70	1296411 - 1413610	REC26-90562					
70	1413811 - 1566239	REC26-76868	REC26-76868	REC26-94038		REC26-16977	REC26-8164641
70 (3 Cyl)	4571652 - 4977156	REC26-69188	REC26-69189	REC26-90562	REC26-79831		REC26-8164641/ REC26-24590
70 (3 Cyl)	4977157 - 5579016	REC26-69188	REC26-76127	REC26-90562	REC26-79831		REC26-8164641
70 (3 Cyl	5679017 - A996142	REC26-69188		REC26-90562	REC26-79831		REC26-8164641
70,75 (3 C)	A996142 +	REC26-76868	REC26-70081		REC26-43036		
75 (4 Cyl)	6432901 - A996142	REC26-76868	REC26-70081	REC26-16977	REC26-94038		REC26-8164641
80	1335465 - 1398629	REC26-76868	REC26-76868	REC26-94038		REC26-16977	REC26-8164641
80	1398630 - 1566239	REC26-76868	REC26-76868	REC26-94038		REC26-16977	REC26-8164641
80 (4 Cyl)	2559001 - 3144218	REC26-76868	REC26-76868	REC26-16977	REC26-94038	REC26-16977	REC26-8164641/ REC26-24590

MODELO MODEL MODELLO	SERIE SERIAL SERIE	INTERIOR HÉLICE INNER PROP INTERNO ÉLICA	EXTERIOR HÉLICE OUTTER PROP ESTERNO ÉLICA	BASE BOMBA SUPERIOR UPPER WATER PUMP BASE POMPA SUPERIORE	BASE BOMBA INFERIOR LOWER WATER PUMP BASE POMPA INFERIORE	CUERPO BOMBA PUMP HOUSTING CORPO POMPA	EJE CAMBIO SHIFT SHAFT ASSE CAMBIO
80 (4 Cyl)	3144219 - 4831998	REC26-76868	REC26-76868	REC26-55682	REC26-94038	REC26-16977	REC26-8164641/ REC26-24590
80 (4 Cyl)	4831999 - 5582561	REC26-76868	REC26-76868	REC26-16977	REC26-94038		REC26-8164641
80 (4 Cyl)	5582562 - A996142	REC26-76868	REC26-70081	REC26-16977	REC26-94038		REC26-8164641
80 (3 Cyl)	A996142 +	REC26-76868	REC26-70081		REC26-43036		
85	1460999 - 1766823	REC26-76868	REC26-76868	REC26-94038		REC26-16977	REC26-8164641
85 (4 Cyl)	3493913 - 4590511	REC26-76868	REC26-76868	REC26-55682	REC26-94038		REC26-8164641/ REC26-24590
85 (4 Cyl)	4590512 - 4831998	REC26-76868	REC26-76868	REC26-16977	REC26-94038		REC26-8164641/ REC26-24590
90	1766824 - 1869775	REC26-76868	REC26-76868	REC26-16977	REC26-94038	REC26-16977	REC26-8164641
90	4845301 - 5594856	REC26-76868	REC26-76868	REC26-16977	REC26-94038		REC26-8164641
90	5594657 - A996142	REC26-76868	REC26-70081	REC26-16977	REC26-94038		REC26-8164641
90 (3 Cyl)	A996142 +	REC26-76868	REC26-70081		REC26-43036		
95	1869776 - 2318585	REC26-76868	REC26-76868	REC26-16977	REC26-94038	REC26-16977	REC26-8164641/ REC26-24590
100, 100SS	1464949 - 2836018	REC26-76868	REC26-76868	REC26-16977	REC26-94038	REC26-16977	REC26-8164641
100BP	2399698 - 2641854	REC26-76868	REC26-76868	REC26-16977	REC26-94038	REC26-16977	REC26-8164641/ REC26-24590
100 (4 Cyl)	B209468 +	REC26-76868	REC26-70081		REC26-43036		
110	1870204 - 2314955	REC26-76868	REC26-76868	REC26-16977	REC26-94038	REC26-16977	REC26-8164641/ REC26-24590
115	2836019 - 3525440	REC26-76868	REC26-76868	REC26-16977	REC26-94038	REC26-16977	REC26-8164641/ REC26-24590
115	3525440 - 4122634	REC26-76868	REC26-76868	REC26-16977		REC26-8164641	REC26-90562/ REC26-24590
115	4122635 - 4855152	REC26-76868	REC26-76868	REC26-16977	REC26-94038		REC26-8164641/ REC26-24590
115	4855153 - 5600966	REC26-76868	REC26-76868	REC26-16977	REC26-94038		REC26-8164641
115	5600967 - C100000	REC26-76868	REC26-70081	REC26-16977	REC26-94038		REC26-8164641
115 (4 Cyl)	C100000 +	REC26-76868	REC26-70081		REC26-43036		
125	2314956 - 2839368	REC26-76868	REC26-76868	REC26-16977	REC26-94038	REC26-16977	REC26-8164641
135	2839369 - 3293233	REC26-76868	REC26-76868	REC26-16977	REC26-94038	REC26-16977	REC26-8164641
140	3293234 - 3502805	REC26-76868	REC26-76868	REC26-16977	REC26-94038	REC26-16977	REC26-8164641/ REC26-24590
140	4865678 +	REC26-76868	REC26-76868	REC26-16977	REC26-94038		REC26-8164641
150	3502806 - 4121434	REC26-76868	REC26-76868	REC26-16977	REC26-94038		REC26-8164641/ REC26-24590
150	4121434 - 5327662	REC26-76868	REC26-76868	REC26-16977	REC26-94038		REC26-8164641/ REC26-24590
150/150XR2	4868998 - 5432021	REC26-76868	REC26-76868	REC26-16977	REC26-89238		REC26-8164641
150/150XRS	5432021 - A904646	REC26-76868	REC26-76868	REC26-16977	REC26-89238		REC26-8164641
150/150XR2	A904646 +	REC26-76868	REC26-76868	REC26-16977	REC26-89238		REC26-8164641
175	4301235 - 6618750	REC26-76868	REC26-76868	REC26-16977	REC26-89238		REC26-8164641
175	6618751 +	REC26-76868	REC26-76868	REC26-16977	REC26-89238		REC26-8164641
200	4839034 - 6073191	REC26-76868	REC26-76868	REC26-16977	REC26-89238		REC26-8164641
200	6073192 +	REC26-76868	REC26-76868	REC26-16977	REC26-89238		REC26-8164641
220	B117316 +	REC26-76868	REC26-76868	REC26-16977	REC26-89238		REC26-8164641
225	5628028 - D280813	REC26-76868	REC26-76868	REC26-16977	REC26-89238		REC26-8164641
250/275	C101891 +	REC26-76868	REC26-76868	REC26-16977	REC26-89238		REC26-8164641
3.4L	5611648 +	REC26-76868	REC26-76868	REC26-16977	REC26-89238		REC26-8164641

COMPONENTES COLA
GEARHOUSING COMPONENTS
COMPONENTI PIEDI

ACOPLE CAMBIO
SHIFT BUSHING
ACCOPPIAMENTO CAMBIO

Ref.	R.O.
REC23-815921A21	23-815921A4 - A10

MOTORES / ENGINES / MOTORI
200 - 250 HP (EFI / DFI / Carb) 3.0L
Race Outboard (3.0L EFI)



ACOPLE GOMA
GROMMET
GOMMINI

Ref.	R.O.
REC26-38970	26-38970

MOTORES / ENGINES / MOTORI
50 - V-225 HP
XR-4 / XR-6
Race Outboard



TORNILLO CON RETÉN
SCREW WITH SEAL
VITI CON PARAOLIO

Ref.	R.O.
REC22-67892A05	22-67892A1

MOTORES / ENGINES / MOTORI
6 HP+
2 & 4 Tiempos / 2 & 4 Strokes / 2 & 4 Tempi



Ref.	R.O.
REC10-79953Q04	10-79953A2

MOTORES / ENGINES / MOTORI
8 - 200 HP
2 & 4 Tiempos / 2 & 4 Strokes / 2 & 4 Tempi
Race Outboard
Sport Jet



CASQUILLO
COUPLING ASSEMBLY
GHIERA

Ref.	R.O.
REC816597A1	816597A1

MOTORES / ENGINES / MOTORI
200 - 225 HP (DFI / EFI / Carb / Seapro)
(3.0L)



RETÉN GOMA
FACE SEAL
PARAOLIO GOMMA

Ref.	R.O.
REC26-816575A2	23-29804

MOTORES / ENGINES / MOTORI
65 - V-225 HP
XR-4 / XR-6



PASADOR
CROSS PIN
CHIAVETTA

Ref.	R.O.
REC17-8M0084681	17-30632

MOTORES / ENGINES / MOTORI
40 - 300 HP
2 & 4 Tiempos / 2 & 4 Strokes / 2 & 4 Tempi
Raco Outboard



CHAVETA
KEY
CHIAVE

REF	R.O. OEM	MOTORES ENGINES MOTORI	TIEMPOS STROKES TEMPI
REC8M0032834	28-56654	140 / 105 / 110 Jet 65 - V-225 HP XR-4 / XR-6 Race Outboard	
REC28-8M0032833	28-43037	30 - 300 HP	2 & 4
REC28-8M0032831	28-8M0032831 28-19699	30 - 60 HP	2 & 4
REC28-8M0032838	28-8M0032838 28-85119	9.9 - 50 HP	2 & 4
REC8M0032837	28-8M0032837 28-56662	30 - 70 HP	2
PAF8-04000021	17-9521811	2 - 9.9 HP	2 & 4
REC28-42376A2	28-42376A2	6 - 15 HP	2 & 4



MUELLE
SPRING
MOLLA

Ref.	R.O.
REC24-30893	24-30893

MOTORES / ENGINES / MOTORI
40 - 350 HP
2 & 4 Tiempos / 2 & 4 Strokes / 2 & 4 Tempi
Raco Outboard

Ref.	R.O.
REC24-38114	24-38114

MOTORES / ENGINES / MOTORI
8 - 70 HP
2 & 4 Tiempos / 2 & 4 Strokes / 2 & 4 Tempi



SUPLEMENTOS
SHIMS
SPESSORI

Ref.	R.O.
REC15-42637A1	15-42637A1

MOTORES / ENGINES / MOTORI
105 - 140 HP
150 / 175 ProXS
200 - 250 (3.0L EFI / DFI)
V-135 - V-200
XR-4 / XR-6

Ref.	R.O.
REC15-47397A1	15-47397A1

MOTORES / ENGINES / MOTORI
105 - 140 Jet
135 - 350 HP
V-135 - V-225
XR-4 / XR-6
2 & 4 Tiempos / 2 & 4 Strokes / 2 & 4 Tempi



EJE CAMBIO
SHIFT POOL
ASSE CAMBIO

Ref.	R.O.
REC818349T1	818349A1

MOTORES / ENGINES / MOTORI
200 - 250 HP (DFI / EFI / Carb) (3.0L)

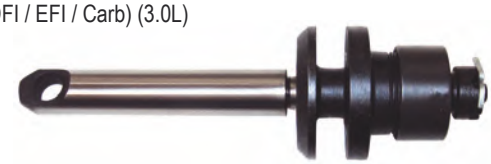

TORNILLO
SCREW
VITE

Ref.	R.O.
REC10-30720	10-30720

MOTORES / ENGINES / MOTORI
65 - V-225 HP
XR-4 / XR-6



Ref.	R.O.
REC10-96411	10-96411

MOTORES / ENGINES / MOTORI
75 - V-225 HP
XR-4 / XR-6
Race Outboard



TUBO AGUA
WATER HOSE
TUBO ACQUA

Ref.	R.O.
REC23-29804T	23-29804

MOTORES / ENGINES / MOTORI
8 - V-200 HP
XR-6
2 & 4 Tiempos / 2 & 4 Strokes / 2 & 4 Tempi



Ref.	R.O.
REC43023	43023

MOTORES / ENGINES / MOTORI
25 - 115 HP
2 & 4 Tiempos / 2 & 4 Strokes / 2 & 4 Tempi



Ref.	R.O.
REC43023-2	43023-2

MOTORES / ENGINES / MOTORI
40 - 115 HP
2 & 4 Tiempos / 2 & 4 Strokes / 2 & 4 Tempi

ARANDELA
WASHER
RONDELLA

Ref.	R.O.
REC12-77674	12-77674



Ref.	R.O.
REC12-86645	12-86645
REC19643	19643
REC12-191833	12-20260, 12-19183



Ref.	R.O.
REC350038	12-92721

MOTORES / ENGINES / MOTORI
80 - 300 HP
2 & 4 Tiempos / 2 & 4 Strokes / 2 & 4 Tempi
Race Outboard



TUERCA HÉLICES
PROP NUT
DADO ÉLICHE

Ref.	R.O.
REC90301-ZW1-003	11-52707

MOTORES / ENGINES / MOTORI
V4 - V6



Ref.	R.O.
REC11-69578Q1	11-69578

MOTORES / ENGINES / MOTORI
40-70 HP



TOPE HÉLICES
THRUST HUB
RONDELLA

Ref.	R.O.
REC13191Q01	13191A1, 75282A1

MOTORES / ENGINES / MOTORI
V4



Ref.	R.O.
REC73345A1	73345A1

MOTORES / ENGINES / MOTORI
40-50 HP



COBRE / BRASS / RAME

Ref.	R.O.
REC12-31211Q01	12-825467, 13171



INOX / SS / INOX

Ref.	R.O.
REC12-835467Q01	13171



TOPE CIERRE HÉLICES
TAB WASHER RECEIVER
RONDELLA CHIUSURA

Ref.	R.O.
REC12-31211Q03	12-31211A2



CIERRE HÉLICES
TAB WASHER
CHIUSURA ELICA

Ref.	R.O.
REC90508-ZW1-003	14-31210

MOTORES / ENGINES / MOTORI
V4 - V6



Ref.	R.O.
REC14-76281Q	14-76281

MOTORES / ENGINES / MOTORI
18-70 HP



Ref.	R.O.
REC13-423511	13-42351-1



KIT CIERRE HÉLICES
PROP NUT KITS
KIT CHIUSURA ELICA

Ref.	R.O.
REC21285	

MOTORES / ENGINES / MOTORI
6 - 15 HP



Ref.	R.O.
REC22215	

MOTORES / ENGINES / MOTORI
6 - 15 HP



Ref.	R.O.
REC13914Q02	11-13914A2

MOTORES / ENGINES / MOTORI
6 - 15 HP



Ref.	R.O.
REC21307	

MOTORES / ENGINES / MOTORI
18 - 25 HP



Ref.	R.O.
REC11-52707Q1	11-52707Q1, 11-52707A1

MOTORES / ENGINES / MOTORI
V4 - V6



Ref.	R.O.
REC11-31990Q02	11-31990A2

MOTORES / ENGINES / MOTORI
30 - 70 HP



GUÍA MANTENIMIENTO
MAINTENANCE GUIDE
GUIDA DI MANUTENZIONE

Modelo / Model / Modello	DESCRIPCIÓN	DESCRIPTION	DESCRIZIONE	Unds. / Units / Unità	Ref.
2 2.5 3.5(Carb)	BUJÍA	SPARK PLUG	CANDELE	1	NGKDCPR6E
	TERMOSTATO	THERMOSTAT	TERMOSTATO	1	RM804540
	IMPULSOR	IMPELLER	GIRANTE	1	REC47-161543
	ÁNODO COLA	ANODE DRIVE	ANODO PIEDE	1	CM823913
4 5 6	BUJÍA	SPARK PLUG	CANDELE	1	NGKDCPR6E
	TERMOSTATO	THERMOSTAT	TERMOSTATO	1	RM804540
	IMPULSOR	IMPELLER	GIRANTE	1	REC47-161543
	FILTRO GASOLINA	FUEL FILTER	FILTRO BENZINA	1	PAF4-05000300
	ÁNODO COLA	ANODE DRIVE	ANODO PIEDE	1	TEN00823
8 (Bodensee) (International)	BUJÍA	SPARK PLUG	CANDELE	2	NGKDPR6EA-9
	TERMOSTATO	THERMOSTAT	TERMOSTATO	1	REC825212T02
	IMPULSOR BIG FOOT	IMPELLER BIG FOOT	GIRANTE BIG FOOT	1	REC47-8508910
	IMPULSOR NO BIG FOOT	IMPELLER NOT BIG FOOT	GIRANTE NO BIG FOOT	1	REC47-420382
	FILTRO GASOLINA	FUEL FILTER	FILTRO BENZINA	1	REC35-80365M
	FILTRO ACEITE	OIL FILTER	FILTRO OLIO	1	REC35-822626Q03
	CORREA	BELT	CINGHIE	1	PAF15-07000002
	ÁNODO COLA NO BIG FOOT	ANODE DRIVE NOT BIG FOOT	ANODO PIEDE NON BIG FOOT	1	CM42121A2
	ÁNODO COLA NO BIG FOOT	ANODE DRIVE NOT BIG FOOT	ANODO PIEDE NON BIG FOOT	1	TEN00812
	ÁNODO BLOQUE MOTOR	ANODE ENGINE	ANODO MOTORE	1	PAF15-07010008
8 & 9.9 (209cc)	BUJÍA	SPARK PLUG	CANDELE	2	NGKDCPR6E
	TERMOSTATO	THERMOSTAT	TERMOSTATO	1	RM855676002
	IMPULSOR BIG FOOT	IMPELLER BIG FOOT	GIRANTE BIG FOOT	1	CEF500383
	IMPULSOR NO BIG FOOT	IMPELLER NOT BIG FOOT	GIRANTE NO BIG FOOT	1	CEF500344
	FILTRO GASOLINA	FUEL FILTER	FILTRO BENZINA	1	PAF4-05000300
	CORREA	BELT	CINGHIE	1	PAF8-05000004
	ÁNODO COLA	ANODE DRIVE	ANODO PIEDE	1	CM3V1-60217-0
	ÁNODO TRANSOM	ANODE TRANSOM	ANODO TRANSOM	2	TEN00834
	ÁNODO BLOQUE MOTOR	ANODE ENGINE	ANODO MOTORE	1	TEN00823
9.9 (323cc)	BUJÍA	SPARK PLUG	CANDELE	2	NGKDPR6EA-9
	TERMOSTATO	THERMOSTAT	TERMOSTATO	1	REC825212T02
	IMPULSOR BIG FOOT	IMPELLER BIG FOOT	GIRANTE BIG FOOT	1	REC47-8508910
	IMPULSOR NO BIG FOOT	IMPELLER NOT BIG FOOT	GIRANTE NO BIG FOOT	1	REC47-420382
	FILTRO GASOLINA	FUEL FILTER	FILTRO BENZINA	1	REC35-80365M
	FILTRO ACEITE	OIL FILTER	FILTRO OLIO	1	REC35-822626Q03
	CORREA	BELT	CINGHIE	1	PAF15-07000002
	ÁNODO COLA NO BIG FOOT	ANODE DRIVE NOT BIG FOOT	ANODO PIEDE NON BIG FOOT	1	CM42121A2
	ÁNODO COLA NO BIG FOOT	ANODE DRIVE NOT BIG FOOT	ANODO PIEDE NON BIG FOOT	1	TEN00812
	ÁNODO BLOQUE MOTOR	ANODE ENGINE	ANODO MOTORE	1	PAF15-07010008

Modelo / Model / Modello	DESCRIPCIÓN	DESCRIPTION	DESCRIZIONE	Unds. / Units / Unità	Ref.
13.5 & 15 (International)	BUJÍA	SPARK PLUG	CANDELE	2	NGKDPR6EA-9
	TERMOSTATO	THERMOSTAT	TERMOSTATO	1	REC825212T02
	IMPULSOR BIG FOOT	IMPELLER BIG FOOT	GIRANTE BIG FOOT	1	REC47-8508910
	IMPULSOR NO BIG FOOT	IMPELLER NOT BIG FOOT	GIRANTE NO BIG FOOT	1	REC47-420382
	FILTRO GASOLINA	FUEL FILTER	FILTRO BENZINA	1	REC35-80365M
	FILTRO ACEITE	OIL FILTER	FILTRO OLIO	1	REC35-822626Q03
	CORREA	BELT	CINGHIE	1	PAF15-07000002
	ÁNODO COLA NO BIG FOOT	ANODE DRIVE NOT BIG FOOT	ANODO PIEDE NON BIG FOOT	1	CM42121A2
	ÁNODO COLA NO BIG FOOT	ANODE DRIVE NOT BIG FOOT	ANODO PIEDE NON BIG FOOT	1	TEN00812
	ÁNODO BLOQUE MOTOR	ANODE ENGINE	ANODO MOTORE	1	PAF15-07010008
15 Carb (2Cyl) & SEAPRO	BUJÍA	SPARK PLUG	CANDELE	2	NGKDCPR6E
	TERMOSTATO	THERMOSTAT	TERMOSTATO	1	RM855676002
	IMPULSOR	IMPELLER	GIRANTE	1	CEF500383
	FILTRO GASOLINA	FUEL FILTER	FILTRO BENZINA	1	PAF4-05000300
	FILTRO ACEITE	OIL FILTER	FILTRO OLIO	1	REC35-822626Q03
	ÁNODO COLA	ANODE DRIVE	ANODO PIEDE	1	CM3V1-60217-0
	ÁNODO TRANSOM TILT MANUAL	ANODE TRANSOM TILT MANUAL	ANODO TRANSOM TILT MANUAL	1	CM823913
	ÁNODO TRANSOM TILT ELÉCTRICO	ANODE TRANSOM TILT ELECTRIC	ANODO TRANSOM TILT ELETTRICO	2	TEN00834
	ÁNODO BLOQUE MOTOR	ANODE ENGINE	ANODO MOTORE	1	TEN00823
	ÁNODO BLOQUE MOTOR	ANODE ENGINE	ANODO MOTORE	1	PAF15-07010008
20 Carb (2Cyl)	BUJÍA	SPARK PLUG	CANDELE	2	NGKDCPR6E
	TERMOSTATO	THERMOSTAT	TERMOSTATO	1	RM855676002
	IMPULSOR	IMPELLER	GIRANTE	1	CEF500383
	FILTRO GASOLINA	FUEL FILTER	FILTRO BENZINA	1	PAF4-05000300
	FILTRO ACEITE	FUEL FILTER	FILTRO BENZINA	1	REC35-822626Q03
	ÁNODO COLA	ANODE DRIVE	ANODO PIEDE	1	CM3V1-60217-0
	ÁNODO TRANSOM TILT MANUAL	ANODE TRANSOM TILT MANUAL	ANODO TRANSOM TILT MANUAL	1	CM823913
	ÁNODO TRANSOM TILT ELÉCTRICO	ANODE TRANSOM TILT ELECTRIC	ANODO TRANSOM TILT ELETTRICO	2	TEN00834
	ÁNODO BLOQUE MOTOR	ANODE ENGINE	ANODO MOTORE	1	TEN00823
	ÁNODO BLOQUE MOTOR	ANODE ENGINE	ANODO MOTORE	1	PAF15-07010008
25 (4 Tiempos 4 Strokes 4 Tempi)	BUJÍA	SPARK PLUG	CANDELE	2	NGKDPR6EA-9
	TERMOSTATO	THERMOSTAT	TERMOSTATO	1	REC825212T02
	CORREA DISTRIBUCIÓN	TIMMING BELT	CINGHIE DISTRIBUZIONE	1	PAF25-05000023
	IMPULSOR	IMPELLER	GIRANTE	1	REC47-8508910
	FILTRO GASOLINA	FUEL FILTER	FILTRO BENZINA	1	REC35-877565T
	FILTRO ACEITE	OIL FILTER	FILTRO OLIO	1	REC35-822626Q04
	ÁNODO COLA	ANODE DRIVE	ANODO PIEDE	1	CM822157T2
	ÁNODO TRANSOM	ANODE TRANSOM	ANODO TRANSOM	1	CM825271
	ÁNODO BLOQUE MOTOR	ANODE ENGINE	ANODO MOTORE	2	CM826887M
	ÁNODO BLOQUE MOTOR	ANODE ENGINE	ANODO MOTORE	1	PAF15-07010008
30 (4 Tiempos 4 Strokes 4 Tempi)	BUJÍA	SPARK PLUG	CANDELE	3	NGKDPR6EA-9
	TERMOSTATO	THERMOSTAT	TERMOSTATO	1	REC825212T02
	CORREA DISTRIBUCIÓN	TIMMING BELT	CINGHIE DISTRIBUZIONE	1	PAF25-05000023
	IMPULSOR (RATIO 2.31:1)	IMPELLER (RATIO 2.31:1)	GIRANTE (RATIO 2.31:1)	1	REC47-43026Q02
	IMPULSOR (RATIO 2:1)	IMPELLER (RATIO 2:1)	GIRANTE (RATIO 2:1)	1	REC47-8508910
	FILTRO GASOLINA	FUEL FILTER	FILTRO BENZINA	1	REC35-877565T
	FILTRO ACEITE	OIL FILTER	FILTRO OLIO	1	REC35-822626Q04
	ÁNODO COLA TIMÓN (RATIO 2.31:1)	ANODE DRIVE (RATIO 2.31:1)	ANODO PIEDE (RATIO 2.31:1)	1	CM31640
	ÁNODO COLA TIMÓN (RATIO 2:1)	ANODE DRIVE (RATIO 2:1)	ANODO PIEDE (RATIO 2:1)	1	CM822157T2
	ÁNODO COLA	ANODE DRIVE	ANODO PIEDE	2	CM826134
	ÁNODO TRANSOM	ANODE TRANSOM	ANODO TRANSOM	1	CM818298
	ÁNODO BLOQUE MOTOR	ANODE ENGINE	ANODO MOTORE	3	CM826887M
30 Carb (3Cyl)	BUJÍA	SPARK PLUG	CANDELE	3	NGKDPR6EA-9
	TERMOSTATO	THERMOSTAT	TERMOSTATO	1	REC825212T02
	CORREA DISTRIBUCIÓN	TIMMING BELT	CINGHIE DISTRIBUZIONE	1	PAF25-05000023
	IMPULSOR (RATIO 2.31:1 / 2.33:1)	IMPELLER (RATIO 2.31:1 / 2.33:1)	GIRANTE (RATIO 2.31:1 / 2.33:1)	1	REC47-43026Q02
	IMPULSOR RATIO 2:1	IMPELLER (RATIO 2:1)	GIRANTE (RATIO 2:1)	1	REC47-8508910
	FILTRO GASOLINA	FUEL FILTER	FILTRO BENZINA	1	REC35-877565T
	FILTRO ACEITE	OIL FILTER	FILTRO OLIO	1	REC35-822626Q04
	ÁNODO COLA TIMÓN (RATIO 2.31:1 / 2.33:1))	ANODE DRIVE (RATIO 2.31:1 / 2.33:1)	ANODO PIEDE (RATIO 2.31:1 / 2.33:1)	1	CM31640
	ÀNODO COLA TIMÓN (RATIO 2:1)	ANODE DRIVE (RATIO 2:1)	ANODO PIEDE (RATIO 2:1)	1	CM822157T2
	ÁNODO COLA	ANODE DRIVE	ANODO PIEDE	2	CM826134
	ÁNODO TRANSOM	ANODE TRANSOM	ANODO TRANSOM	1	CM818298
30 EFI (3Cyl)	BUJÍA	SPARK PLUG	CANDELE	3	CHARA8HC
	TERMOSTATO	THERMOSTAT	TERMOSTATO	1	REC825212T02
	CORREA DISTRIBUCIÓN	TIMMING BELT	CINGHIE DISTRIBUZIONE	1	PAF25-05000023
	IMPULSOR	IMPELLER	GIRANTE	1	REC47-8508910
	FILTRO GASOLINA LINEA	INLINE FUEL FILTER	FILTRO BENZINA IN LINIA	1	REC35-879885T
	FILTRO GASOLINA ELEMENTO	FUEL FILTER ELEMENT	FILTRO BENZINA, CARTUCCIA	1	PAF15-07080000
	FILTRO ACEITE	OIL FILTER	FILTRO OLIO	1	REC35-822626Q04
	ÁNODO COLA TIMÓN	ANODE DRIVE	ANODO PIEDE	1	CM822157T2
	ÁNODO TRANSOM	ANODE TRANSOM	ANODO TRANSOM	1	CM818298

Modelo Model Modello	DESCRIPCIÓN	DESCRIPTION	DESCRIZIONE	Unds. Units Unità	Ref.
40 (4 Tiempos 4 Strokes 4 Tempi)	BUJÍA	SPARK PLUG	CANDELE	4	NGKDPR6EA-9
	TERMOSTATO	THERMOSTAT	TERMOSTATO	1	REC825212T02
	CORREA DISTRIBUCIÓN	TIMMING BELT	CINGHIE DISTRIBUZIONE	1	PAF25-05000023
	IMPULSOR (RATIO 1.83:1 / 2:1)	IMPELLER (RATIO 1.83:1 / 2:1)	GIRANTE (RATIO 1.83:1 / 2:1)	1	REC47-8508910
	IMPULSOR (RATIO 2.31:1)	IMPELLER (RATIO 2.31:1)	GIRANTE (RATIO 2.31:1)	1	REC47-43026Q02
	FILTRO GASOLINA (Serial 0G589999<)	FUEL FILTER (Serial 0G589999<)	FILTRO BENZINA (Serial 0G589999<)	1	REC40155
	FILTRO GASOLINA (Serial 0G590000>)	FUEL FILTER (Serial 0G590000>)	FILTRO BENZINA (Serial 0G590000>)	1	REC40145
	FILTRO ACEITE	OIL FILTER	FILTRO OLIO	1	REC35-822626Q04
	ÁNODO COLA TIMÓN (RATIO 1.83:1 / 2:1)	ANODE DRIVE (RATIO 1.83:1 / 2:1)	ANODO PIEDE (RATIO 1.83:1 / 2:1)	1	CM822157T2
	ÁNODO COLA TIMÓN (RATIO 2.31:1)	ANODE DRIVE (RATIO 2.31:1)	ANODO PIEDE (RATIO 2.31:1)	1	CM31640
	ÁNODO COLA (RATIO 2.31:1)	ANODE DRIVE (RATIO 2.31:1)	ANODO PIEDE (RATIO 2.31:1)	2	CM826134
	ÁNODO TRANSOM (BIG FOOT)	ANODE TRANSOM BIG FOOT	ANODO TRANSOM BIG FOOT	1	CM818298
	ÁNODO TRANSOM (NO FOOT)	ANODE TRANSOM NOT BIG FOOT	ANODO TRANSOM NON BIG FOOT	1	CM825271
	ÁNODO BLOQUE MOTOR	OIL FILTER	FILTRO OLIO	3	CM826887M
40 CARB (3CYL)	BUJÍA	SPARK PLUG	CANDELE	3	NGKDPR6EA-9
	TERMOSTATO	THERMOSTAT	TERMOSTATO	1	REC825212T02
	CORREA DISTRIBUCIÓN	TIMMING BELT	CINGHIE DISTRIBUZIONE	1	PAF25-05000023
	IMPULSOR (RATIO 1.83:1)	IMPELLER (RATIO 1.83:1)	GIRANTE (RATIO 1.83:1)	1	REC47-8508910
	IMPULSOR (RATIO 2.31:1)	IMPELLER (RATIO 2.31:1)	GIRANTE (RATIO 2.31:1)	1	REC47-43026Q02
	FILTRO GASOLINA	FUEL FILTER	FILTRO BENZINA	1	REC35-877565T
	FILTRO ACEITE	OIL FILTER	FILTRO OLIO	1	REC35-822626Q04
	ÁNODO COLA TIMÓN (RATIO 2:1)	ANODE DRIVE (RATIO 2:1)	ANODO PIEDE (RATIO 2:1)	1	CM822157T2
	ÁNODO COLA TIMÓN (RATIO 2.31:1)	ANODE DRIVE (RATIO 2.31:1)	ANODO PIEDE (RATIO 2.31:1)	1	CM31640
	ÁNODO COLA (RATIO 2.31:1)	ANODE DRIVE (RATIO 2.31:1)	ANODO PIEDE (RATIO 2.31:1)	1	CM818298
	ÁNODO TRANSOM	ANODE TRANSOM	ANODO TRANSOM	1	CM818298
40 (4 CYL)	BUJÍA	SPARK PLUG	CANDELE	4	NGKDPR6EA-9
	TERMOSTATO	THERMOSTAT	TERMOSTATO	1	REC14586
	CORREA DISTRIBUCIÓN	TIMMING BELT	CINGHIE DISTRIBUZIONE	1	PAF25-05000023
	IMPULSOR (RATIO 1.83:1)	IMPELLER (RATIO 1.83:1)	GIRANTE (RATIO 1.83:1)	1	REC47-19453T
	IMPULSOR (RATIO 2.31:1)	IMPELLER (RATIO 2.31:1)	GIRANTE (RATIO 2.31:1)	1	REC47-43026Q02
	FILTRO GASOLINA	FUEL FILTER	FILTRO BENZINA	1	REC35-877565T
	FILTRO ACEITE	OIL FILTER	FILTRO OLIO	1	REC35-822626Q04
	ÁNODO COLA TIMÓN (RATIO 1.83:1)	ANODE DRIVE (RATIO 1.83:1)	ANODO PIEDE (RATIO 1.83:1)	1	CM17264
	ÁNODO COLA TIMÓN (RATIO 2.31:1)	ANODE DRIVE (RATIO 2.31:1)	ANODO PIEDE (RATIO 2.31:1)	1	CM31640
	ÁNODO COLA (RATIO 2.31:1)	ANODE DRIVE (RATIO 2.31:1)	ANODO PIEDE (RATIO 2.31:1)	2	CM826134
	ÁNODO TRANSOM	ANODE TRANSOM	ANODO TRANSOM	1	CM818298
40 EFI (3 CYL)	BUJÍA	SPARK PLUG	CANDELE	3	CHARA8HC
	TERMOSTATO	THERMOSTAT	TERMOSTATO	1	REC825212T02
	CORREA DISTRIBUCIÓN	TIMMING BELT	CINGHIE DISTRIBUZIONE	1	PAF25-05000023
	IMPULSOR	IMPELLER	GIRANTE	1	REC47-8508910
	FILTRO GASOLINA (LINEA)	INLINE FUEL FILTER	FILTRO BENZINA IN LINIA	1	REC35-879885T
	FILTRO GASOLINA	FUEL FILTER	FILTRO BENZINA	1	PAF15-07080000
	FILTRO ACEITE	OIL FILTER	FILTRO OLIO	1	REC35-822626Q04
	ÁNODO COLA TIMÓN	ANODE DRIVE	ANODO PIEDE	1	CM822157T2
	ÁNODO TRANSOM	ANODE TRANSOM	ANODO TRANSOM	1	CM818298
40 EFI (4 CYL)	BUJÍA	SPARK PLUG	CANDELE	4	CHARA8HC
	TERMOSTATO	THERMOSTAT	TERMOSTATO	1	REC14586
	CORREA DISTRIBUCIÓN	TIMMING BELT	CINGHIE DISTRIBUZIONE	1	PAF25-05000023
	IMPULSOR (RATIO 1.83:1)	IMPELLER (RATIO 1.83:1)	GIRANTE (RATIO 1.83:1)	1	REC47-19453T
	IMPULSOR (RATIO 2.33:1)	IMPELLER (RATIO 2.33:1)	GIRANTE (RATIO 2.33:1)	1	REC47-43026Q02
	FILTRO GASOLINA (LINEA)	INLINE FUEL FILTER	FILTRO BENZINA IN LINIA	1	REC35-879885T
	FILTRO GASOLINA	FUEL FILTER	FILTRO BENZINA	1	PAF15-07080000
	FILTRO ACEITE	OIL FILTER	FILTRO OLIO	1	REC35-822626Q04
	ÁNODO COLA TIMÓN (RATIO 1.83:1)	ANODE DRIVE (RATIO 1.83:1)	ANODO PIEDE (RATIO 1.83:1)	1	CM17264
	ÁNODO COLA TIMÓN (RATIO 2.33:1)	ANODE DRIVE (RATIO 2.31:1)	ANODO PIEDE (RATIO 2.31:1)	1	CM31640
	ÁNODO COLA	ANODE DRIVE	ANODO PIEDE	2	CM826134
	ÁNODO TRANSOM	ANODE TRANSOM	ANODO TRANSOM	1	CM818298
40 (ITALY)	BUJÍA	SPARK PLUG	CANDELE	4	NGKDPR6EA-9
	TERMOSTATO	THERMOSTAT	TERMOSTATO	1	REC825212T02
	IMPULSOR (RATIO 1.83:1)	IMPELLER (RATIO 1.83:1)	GIRANTE (RATIO 1.83:1)	1	REC47-8508910
	IMPULSOR (RATIO 2.31:1)	IMPELLER (RATIO 2.31:1)	GIRANTE (RATIO 2.31:1)	1	REC47-43026Q02
	FILTRO GASOLINA (LINEA)	INLINE FUEL FILTER	FILTRO BENZINA IN LINIA	1	REC40145
	FILTRO ACEITE	OIL FILTER	FILTRO OLIO	1	REC35-822626Q04
	ÁNODO COLA TIMÓN (RATIO 1.83:1)	ANODE DRIVE (RATIO 1.83:1)	ANODO PIEDE (RATIO 1.83:1)	1	CM822157T2
	ÁNODO COLA TIMÓN (RATIO 2.31:1)	ANODE DRIVE (RATIO 2.31:1)	ANODO PIEDE (RATIO 2.31:1)	1	CM31640
	ÁNODO COLA	ANODE DRIVE	ANODO PIEDE	2	CM826134
	ÁNODO TRANSOM	ANODE TRANSOM	ANODO TRANSOM	1	CM818298
	ÁNODO BLOQUE MOTOR	ANODE ENGINE	ANODO MOTORE	4	CM826887M

Modelo / Model / Modello	DESCRIPCIÓN	DESCRIPTION	DESCRIZIONE	Unds. / Units / Unità	Ref.
45 BODENSEE	BUJÍA	SPARK PLUG	CANDELE	4	NGKDPR6EA-9
	TERMOSTATO	THERMOSTAT	TERMOSTATO	1	REC825212T02
	IMPULSOR (RATIO 1.83:1 / 2:1)	IMPELLER (RATIO 1.83:1 / 2:1)	GIRANTE (RATIO 1.83:1 / 2:1)	1	REC47-8508910
	IMPULSOR (RATIO 2.31:1)	IMPELLER (RATIO 2.31:1)	GIRANTE (RATIO 2.31:1)	1	REC47-43026Q02
	FILTRO GASOLINA (Serie 0G589999<)	FUEL FILTER (Serial 0G589999<)	FILTRO BENZINA (Serie 0G589999<)	1	REC40155
	FILTRO GASOLINA (Serie 0G590000>)	FUEL FILTER (Serial 0G590000>)	FILTRO BENZINA (Serie 0G590000>)	1	REC40145
	FILTRO ACEITE	OIL FILTER	FILTRO OLIO	1	REC35-822626Q04
	ÁNODO COLA TIMÓN (RATIO 1.83:1 / 2:1)	ANODE DRIVE (RATIO 1.83:1 / 2:1)	ANODO PIEDE (RATIO 1.83:1 / 2:1)	1	CM822157T2
	ÁNODO COLA TIMÓN (RATIO 2.31:1)	ANODE DRIVE (RATIO 2.31:1)	ANODO PIEDE (RATIO 2.31:1)	1	CM31640
	ÁNODO COLA (RATIO 2.31:1)	ANODE DRIVE (RATIO 2.31:1)	ANODO PIEDE (RATIO 2.31:1)	2	CM826134
	ÁNODO TRANSOM (BIG FOOT)	ANODE TRANSOM BIG FOOT	ANODO TRANSOM BIG FOOT	1	CM818298
	ÁNODO TRANSOM (NO BIG FOOT)	ANODE TRANSOM NOT BIG FOOT	ANODO TRANSOM NON BIG FOOT	1	CM825271
	ÁNODO BLOQUE MOTOR	ANODE ENGINE	ANODO MOTORE	4	CM826887M
50 & 50 BIGFOOT	BUJÍA	SPARK PLUG	CANDELE	4	NGKDPR6EA-9
	TERMOSTATO	THERMOSTAT	TERMOSTATO	1	REC825212T02
	IMPULSOR (RATIO 1.83:1)	IMPELLER (RATIO 1.83:1)	GIRANTE (RATIO 1.83:1)	1	REC47-8508910
	IMPULSOR (RATIO 2.31:1)	IMPELLER (RATIO 2.31:1)	GIRANTE (RATIO 2.31:1)	1	REC47-43026Q02
	FILTRO GASOLINA	FUEL FILTER	FILTRO BENZINA	1	REC40145
	FILTRO ACEITE	OIL FILTER	FILTRO OLIO	1	REC35-822626Q04
	ÁNODO COLA TIMÓN (RATIO 1.83:1)	ANODE DRIVE (RATIO 1.83:1)	ANODO PIEDE (RATIO 1.83:1)	1	CM822157T2
	ÁNODO COLA TIMÓN (RATIO 2.31:1)	ANODE DRIVE (RATIO 2.31:1)	ANODO PIEDE (RATIO 2.31:1)	1	CM31640
	ÁNODO COLA (RATIO 2.31:1)	ANODE DRIVE (RATIO 2.31:1)	ANODO PIEDE (RATIO 2.31:1)	2	CM826134
	ÁNODO TRANSOM	ANODE TRANSOM	ANODO TRANSOM	1	CM818298
	ÁNODO BLOQUE MOTOR	ANODO ENGINE	ANODO MOTORE	4	CM826887M
	ÁNODO TRANSOM (NO BIG FOOT)	ANODO TRANSOM (NOT BIG FOOT)	ANODO TRANSOM NON BIG FOOT	1	CM825271
	ÁNODO BLOQUE MOTOR	ENGINE ANODO	ANODO MOTORE	4	CM826887M
50 (EFI) (4 CYL)	BUJÍA	SPARK PLUG	CANDELE	4	CHARA8HC
	TERMOSTATO	THERMOSTAT	TERMOSTATO	1	REC14586
	CORREA DISTRIBUCIÓN	TIMMING BELT	CINGHIE DISTRIBUZIONE	1	PAF25-05000023
	IMPULSOR (RATIO 1.83:1)	IMPELLER (RATIO 1.83:1)	GIRANTE (RATIO 1.83:1)	1	REC47-19453T
	IMPULSOR (RATIO 2.33:1)	IMPELLER (RATIO 2.33:1)	GIRANTE (RATIO 2.33:1)	1	REC47-43026Q02
	FILTRO GASOLINA (LINEA)	INLINE FUEL FILTER	FILTRO BENZINA IN LINIA	1	REC35-879885T
	FILTRO GASOLINA	FUEL FILTER	FILTRO BENZINA	1	PAF15-07080000
	FILTRO ACEITE	OIL FILTER	FILTRO OLIO	1	REC35-822626Q04
	ÁNODO COLA TIMÓN (RATIO 1.83:1)	ANODE DRIVE (RATIO 1.83:1)	ANODO PIEDE (RATIO 1.83:1)	1	CM17264
	ÁNODO COLA TIMÓN (RATIO 2.33:1)	ANODE DRIVE (RATIO 2.33:1)	ANODO PIEDE (RATIO 2.33:1)	1	CM31640
	ÁNODO COLA	ANODE DRIVE	ANODO PIEDE	2	CM826134
	ÁNODO TRANSOM	ANODE TRANSOM	ANODO TRANSOM	1	CM818298
50 (4 CYL)	BUJÍA	SPARK PLUG	CANDELE	4	NGKDPR6EA-9
	TERMOSTATO	THERMOSTAT	TERMOSTATO	1	REC14586
	CORREA DISTRIBUCIÓN	TIMMING BELT	CINGHIE DISTRIBUZIONE	1	PAF25-05000023
	IMPULSOR (RATIO 1.83:1)	IMPELLER (RATIO 1.83:1)	GIRANTE (RATIO 1.83:1)	1	REC47-19453T
	IMPULSOR (RATIO 2.31:1)	IMPELLER (RATIO 2.31:1)	GIRANTE (RATIO 2.31:1)	1	REC47-43026Q02
	FILTRO GASOLINA (LINEA)	INLINE FUEL FILTER	FILTRO BENZINA IN LINIA	1	REC35-877565T
	FILTRO ACEITE	OIL FILTER	FILTRO OLIO	1	REC35-822626Q04
	ÁNODO COLA TIMÓN (RATIO 1.83:1)	ANODE DRIVE (RATIO 1.83:1)	ANODO PIEDE (RATIO 1.83:1)	1	CM17264
	ÁNODO COLA TIMÓN (RATIO 2.31:1)	ANODE DRIVE (RATIO 2.31:1)	ANODO PIEDE (RATIO 2.31:1)	1	CM31640
	ÁNODO COLA (RATIO 2.31:1)	ANODE DRIVE (RATIO 2.31:1)	ANODO PIEDE (RATIO 2.31:1)	2	CM826134
	ÁNODO TRANSOM	ANODE TRANSOM	ANODO TRANSOM	1	CM818298
60 (4 CYL)	BUJÍA	SPARK PLUG	CANDELE	4	NGKDPR6EA-9
	TERMOSTATO	THERMOSTAT	TERMOSTATO	1	REC14586
	CORREA DISTRIBUCIÓN	TIMMING BELT	CINGHIE DISTRIBUZIONE	1	PAF25-05000023
	IMPULSOR (RATIO 1.83:1)	IMPELLER (RATIO 1.83:1)	GIRANTE (RATIO 1.83:1)	1	REC47-19453T
	IMPULSOR (RATIO 2.31:1)	IMPELLER (RATIO 2.31:1)	GIRANTE (RATIO 2.31:1)	1	REC47-43026Q02
	FILTRO GASOLINA (LINEA)	INLINE FUEL FILTER	FILTRO BENZINA IN LINIA	1	REC35-877565T
	FILTRO ACEITE	OIL FILTER	FILTRO OLIO	1	REC35-822626Q04
	ÁNODO COLA TIMÓN (RATIO 1.83:1)	ANODE DRIVE (RATIO 1.83:1)	ANODO PIEDE (RATIO 1.83:1)	1	CM17264
	ÁNODO COLA TIMÓN (RATIO 2.31:1)	ANODE DRIVE (RATIO 2.31:1)	ANODO PIEDE (RATIO 2.31:1)	1	CM31640
	ÁNODO COLA (RATIO 2.31:1)	ANODE DRIVE (RATIO 2.31:1)	ANODO PIEDE (RATIO 2.31:1)	2	CM826134
	ÁNODO TRANSOM	ANODE TRANSOM	ANODO TRANSOM	1	CM818298

Modelo Model Modello	DESCRIPCIÓN	DESCRIPTION	DESCRIZIONE	Unds. Units Unità	Ref.
60 EFI (4 CYL)	BUJÍA	SPARK PLUG	CANDELE	4	CHARA8HC
	TERMOSTATO	THERMOSTAT	TERMOSTATO	1	REC14586
	CORREA DISTRIBUCIÓN	TIMMING BELT	CINGHIE DISTRIBUZIONE	1	PAF25-05000023
	IMPULSOR (RATIO 1.83:1)	IMPELLER (RATIO 1.83:1)	GIRANTE (RATIO 1.83:1)	1	REC47-19453T
	IMPULSOR (RATIO 2.33:1)	IMPELLER (RATIO 2.33:1)	GIRANTE (RATIO 2.33:1)	1	REC47-43026Q02
	FILTRO GASOLINA (LINEA)	INLINE FUEL FILTER	FILTRO BENZINA IN LINIA	1	REC35-879885T
	FILTRO GASOLINA	FUEL FILTER	FILTRO BENZINA	1	PAF15-07080000
	FILTRO ACEITE	OIL FILTER	FILTRO OLIO	1	REC35-822626Q03
	ÁNODO COLA TIMÓN (RATIO 1.83:1)	ANODE DRIVE (RATIO 1.83:1)	ANODO PIEDE (RATIO 1.83:1)	1	CM822157T2
	ÁNODO COLA TIMÓN (RATIO 2.33:1)	ANODE DRIVE (RATIO 2.33:1)	ANODO PIEDE (RATIO 2.33:1)	1	CM31640
	ÁNODO COLA	ANODE DRIVE	ANODO PIEDE	2	CM826134
	ÁNODO TRANSOM	ANODE TRANSOM	ANODO TRANSOM	1	CM818298
75 (BODENSEE)	BUJÍA	SPARK PLUG	CANDELE	4	NGKLFR5A-11
	TERMOSTATO	THERMOSTAT	TERMOSTATO	1	REC825212T02
	IMPULSOR	IMPELLER	GIRANTE	1	REC47-43026Q02
	FILTRO GASOLINA	FUEL FILTER	FILTRO BENZINA	1	REC68V-24563-00
	FILTRO ACEITE	OIL FILTER	FILTRO OLIO	1	REC35-822626Q04
	ÁNODO COLA TIMÓN	ANODE DRIVE	ANODO PIEDE	1	CM31640
	ÁNODO COLA	ANODE DRIVE	ANODO PIEDE	2	CM826134
	ÁNODO TRANSOM	ANODE TRANSOM	ANODO TRANSOM	1	CM818298
80 - 100 EFI (4 CYL)	BUJÍA	SPARK PLUG	CANDELE	4	NGKLFR4AE
	IMPULSOR	IMPELLER	GIRANTE	1	REC47-43026Q02
	FILTRO GASOLINA	FUEL FILTER	FILTRO BENZINA	2	REC35-879885T
	FILTRO ACEITE	OIL FILTER	FILTRO OLIO	1	REC35-877761Q01
	FILTRO AIRE	AIR FILTER	FILTRO ARIA	1	RM35-8M0082911
	ÁNODO COLA TIMÓN	ANODE DRIVE	ANODO PIEDE	1	CM31640
	ÁNODO COLA	ANODE DRIVE	ANODO PIEDE	2	CM826134
	ÁNODO TRANSOM	ANODE TRANSOM	ANODO TRANSOM	1	CM818298
135 / 150 / 175 / 200 VERADO (4 CYL)	BUJÍA	SPARK PLUG	CANDELE	4	NGKILFR6G-E
	BUJÍA (0P514869 ⟩	SPARK PLUG (0P514869 ⟩	CANDELE (0P514869 ⟩	4	NGKILFR6G-E
	TERMOSTATO	THERMOSTAT	TERMOSTATO	1	RM880640508
	IMPULSOR	IMPELLER	GIRANTE	1	REC47-43026Q02
	FILTRO GASOLINA (LINEA)	INLINE FUEL FILTER	FILTRO BENZINA IN LINIA	1	REC35-877565T
	FILTRO GASOLINA	FUEL FILTER	FILTRO BENZINA	1	RAC31871
	PRE-FILTRO GASOLINA	FUEL PRE-FILTER	PRE-FILTRO BENZINA	1	RACS3227
	FILTRO ACEITE	OIL FILTER	FILTRO OLIO	1	REC35-896546T
	FILTRO AIRE	AIR FILTER	FILTRO ARIA	1	REC35-896247
	CORREA DISTRIBUCIÓN	TIMMING BELT	CINGHIE DISTRIBUZIONE	1	REC57-880566Q14
	ÁNODO COLA TIMÓN	ANODE DRIVE	ANODO PIEDE	1	CM76214
	ÁNODO COLA	ANODE DRIVE	ANODO PIEDE	2	CM826134
	ÁNODO TRANSOM	ANODE TRANSOM	ANODO TRANSOM	1	CM818298
	KIT ÁNODOS (ZINC)	ANODE KIT (ZINC)	KIT ANODI (ZINCO)	1	CMVERADO4KITA
	KIT ÁNODOS (MAGNESIO)	ANODE KIT (MAGNESIUM)	KIT ANODI (MAGNESIO)	1	CMVERADO4KITM
200 / 225 / 250 / 275 / 300 VERADO (4 CYL)	BUJÍA	SPARK PLUG	CANDELE	6	NGKILFR6G-E
	BUJÍA (0P520553 a 2B144122)	SPARK PLUG (0P520553 to 2B144122)	CANDELE (0P520553 a 2B144122)	6	NGKILFR6G-E
	TERMOSTATO	THERMOSTAT	TERMOSTATO	1	RM880640508
	IMPULSOR	IMPELLER	GIRANTE	1	REC47-43026Q02
	FILTRO GASOLINA (LINEA)	INLINE FUEL FILTER	FILTRO BENZINA IN LINIA	1	REC35-877565T
	FILTRO GASOLINA	FUEL FILTER	FILTRO BENZINA	1	RAC31871
	PRE-FILTRO GASOLINA	FUEL PRE-FILTER	PRE-FILTRO BENZINA	1	RACS3227
	FILTRO ACEITE	OIL FILTER	FILTRO OLIO	1	REC35-883701K01
	CORREA DISTRIBUCIÓN	TIMMING BELT	CINGHIE DISTRIBUZIONE	1	REC57-880566Q14
	ÁNODO COLA TIMÓN	ANODE DRIVE	ANODO PIEDE	1	CM76214
	ÁNODO COLA	ANODE DRIVE	ANODO PIEDE	2	CM826134
	ÁNODO TRANSOM	ANODE TRANSOM	ANODO TRANSOM	4	CM892227
	ÁNODO TRANSOM	ANODE TRANSOM	ANODO TRANSOM	1	CM880653
	KIT ÁNODOS (ZINC)	ANODE KIT (ZINC)	KIT ANODI (ZINCO)	1	CMVERADO6KITA
	KIT ÁNODOS (MAGNESIO)	ANODE KIT (MAGNESIUM)	KIT ANODI (MAGNESIO)	1	CMVERADO6KITM

HÉLICES ALUMINO E INOXIDABLES DE 3 Y 4 PALAS
3 & 4 BLADE ALUMINUM & STAINLESS STEEL PROPELLERS
ELICHE ALLUMINIO E INOX DA 3 E 4 PALE

SISTEMA CÓDIGO REFERENCIAS
PART NO. CODING SYSTEM
SISTEMA DI CODICE

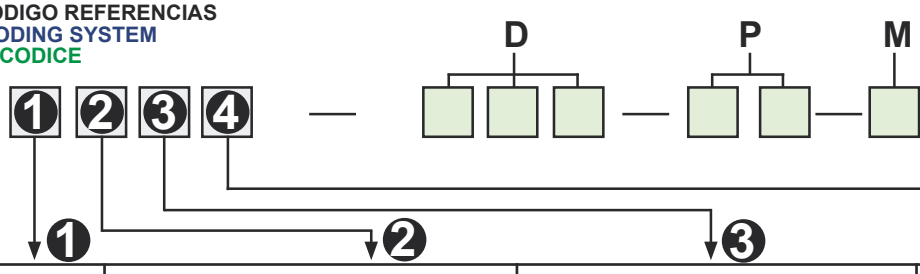

1	2	3	4
1. Mercury, Mariner 2. Johnson, Evinrude 3. Yamaha 4. Suzuki 5. Tohatsu 6. 7. 8. Volvo Penta 9. Rubex System	0.5,6,8 and 9.8 HP Grupo /Group / Gruppo 1. A Grupo /Group / Gruppo 2. B Grupo /Group / Gruppo 3. C Grupo /Group / Gruppo 4. D Grupo /Group / Gruppo 5. E Grupo /Group / Gruppo 6. F Grupo /Group / Gruppo 7. VP (Cubo std./Std. Hub / mozzo std.) 8. VP (Cubo largo /Long Hub / mozzo lungo)	1. Aluminio /Aluminum / Alluminio 2. **Saturn** Acero inox. /S.S. / Acciaio inox. 3. **New Saturn** Acero inox. /S.S. / Acciaio inox. 4. **Titan** Acero inox. /S.S. / Acciaio inox. 5. **HR Titan** Acero inox. /S.S. / Acciaio inox.	1. 3R Rubber Hub 2. 3L Rubber Hub 3. 4R Rubber Hub 4. 4L Rubber Hub

Ejemplo / Note / Esempio

D (Ø)
i.e. 13 1/4 ➔133, 13.75 ➔138

P (Pitch)
i.e. 17" ➔ 17, 13" ➔13

M
P — Pin Drive Propeller
1, 2, 5 — Different Propeller Hub Fitting Spec.

SOLAS
AMITA 3



- Hélices de aluminio de 3 palas con núcleo de goma de gran resistencia.
- 3 blade aluminum propeller with heavy duty rubber hub.
- Eliche in alluminio a 3 pale con mozzi in gomma ad alta resistenza.

SOLAS
NEW SATURN PROP



- Hélices de acero inoxidable de 3 palas.
- Ofrece buena aceleración y rendimiento.
- Tamaño más pequeño que ofrece un diámetro extragrande.
- Three blade stainless steel propeller.
- Offers good acceleration & all-round performance.
- Smaller pitch sizes offered in extra large diameter with increased blade area.
- Eliche in acciaio inox a 3 pale.
- Consentono buone accellerazioni.
- Con un'area più ampia nelle pale.

SOLAS
TITAN



- Hélices de acero inox de 3 palas.
- Diseño de pala grande para un área más grande.
- Gran capacidad de transporte de carga.
- Excelente economía de combustible.
- 3 blade stainles steel propeller.
- High camber blade and large blade area design.
- Great load carrying capability.
- Excellent fuel economy.
- Eliche a 3 pale in acciaio inossidabile.
- Con un'area più ampia nelle pale.
- Ampia capacità di carico.
- Eccellente economia di carburante.

SOLAS
AMITA 4



- Hélices de aluminio de 4 palas con núcleo de goma de gran resistencia.
- Van muy suaves a poca velocidad y hace el barco muy manejable con la mar picada.
- 4 Blade aluminum propeller with heavy duty rubber hub.
- Smoother low speed makes the offshore boating activity much easier.
- Eliche in alluminio a 4 pale con mozzo in gomma ad alta resistenza.
- Ideale per basse velocità, rendono l'imbarcazione molto maneggevole anche con mare mosso.

SOLAS
HR TITAN 3 PROP



- Hélice de acero inoxidable de 3 palas.
- Alto rendimiento para cascos de alta velocidad.
- La inclinación de la hoja proporciona un excelente elevación de proa y aceleración.
- El diseño de copa grande aumenta la mordida y reduce el deslizamiento.
- Three blade stainless steel propeller.
- Performance prop for high speed planning hulls.
- High rake blade design provides excellent bow lift and acceleration.
- Heavy cup design increases bite and reduces slip.
- Eliche di acciaio inox a 3 pale.
- Alte prestazioni per scafi ad alta velocità.
- Il passo della pala fornisce un'eccellente elevazione e accelerazione.
- Il disegno della coppa aumenta le prestazioni e riduce lo slittamento.

GUÍA DE HÉLICES ALUMINO E INOXIDABLES DE 3 Y 4 PALAS
3 & 4 BLADE ALUMINUM & STAINLESS STEEL PROPELLERS APLICATION
GUIDA ELICHE ALLUMINIO E INOX DA 3 E 4 PALE

HP	R.O. OEM	B	D	P	R	TIPO TYPE	ALUMINIO ALUMINIUM ALLUMINIO		INOX STAINLESS STEEL		
							AMITA 3	AMITA 4	NEW SATURN	TITAN	HR TITAN 3
2.5, 3.5 HP Pasador plástico Plastic pin drive. Spinotto plastica.	48-815083	3	7 1/4	6	R	PLAST.	**SOL0001-073-06P**				
4, 4.5, 5, 6 HP 12 Estrías. Escape hélice. 12 Tooth spline. Thrust Hub exhaust. 12 Scalanature.		3 3	7.8 7.8	7 8	R R	ALUM. ALUM.	**SOL5011-078-07** **SOL5011-078-08**				
8, 9.9HP 12 Estrías. 4 Tiempos 2005+ Carcasa 2 1/2". 12 Tooth spline. 4 Strokes 2005+ Gearcase 2 1/2". 12 Scalanature. 4 Tempi 2005+ Carcassa 2 1/2"	48-895180A10 48-895182A10	3 3 3	8.5 8.5 8.5	7 8 9	R R R	ALUM. ALUM. ALUM.	**SOL5011-085-07** **SOL5011-085-08** **SOL5011-085-09**				
9.9HP BigFoot (2005+) 15,20 (4 Tiempos / 4 Strokes / 4 Tempi) (2007+) 14 Estrías. Carcasa 2 1/2" 14 Tooth spline. Gearcase 2 1/2" 14 Scalanature. Carcassa 2 1/2"		3 3 3 3 3	9.25 9.25 9.25 9.25 9.25	7 8 9 10 11	R R R R R	ALUM. ALUM. ALUM. ALUM. ALUM.	**SOL5111-093-07** **SOL5111-093-08** **SOL5111-093-09** **SOL5111-093-10** **SOL5111-093-11**				
4 Tiempos / Strokes / Tempi 8, 9.9 HP (2002-04) 2 Tiempos / Strokes / Tempi 6, 8, 9.9 HP (1986+) 10 HP (1995-01) 15 HP (1989-06) 2 & 4 Tiempos / Strokes / Tempi 8 Estrías. Carcasa 2 1/2". 8 Tooth spline. Gearcase 2 1/2". 8 Scalanature. Carcassa 2 1/2"	48-828152A12 48-828154A12 48-828156A12 48-828158A12	3 3 3 3 3	9 1/4 9 1/4 9 1/4 9 1/4 9 1/4	7 8 9 10 11	R R R R R	BlackMax BlackMax BlackMax BlackMax BlackMax	**SOL1111-093-07** **SOL1111-093-08** **SOL1111-093-09** **SOL1111-093-10** **SOL1111-093-11**				
4 Tiempos / Strokes / Tempi 9.9, 15 HP BigFoot (1999-05) 2 Tiempos / Strokes / Tempi 18 HP (1980-85) 20, 25 HP (1980-05) 10 Estrías. Carcasa 3". 10 Tooth spline. Gearcase 3". 10 Scalanature. Carcassa 3"	48-19636A10 48-19638A40 48-19639A40 48-19640A40 48-19642A40	3 3 3 3 3	10 3/8 10 3/8 10 3/8 10 3/8 10 1/4	9 1/2 11 12 13 14 1/2	R R R R R	BlackMax BlackMax BlackMax BlackMax BlackMax	**SOL1211-110-09** **SOL1211-105-11** **SOL1211-103-12** **SOL1211-101-13** **SOL1211-100-14**				
4 Tiempos / Strokes / Tempi 25 HP (1999-05) 30 HP (1994-05, 2010+) 40, 50, 60 HP 2 Tiempos / Strokes / Tempi 30 - 70 HP (1994-05) 13 Estrías. Carcasa 3 1/4". 13 Tooth spline. Gearcase 3 1/4". 13 Scalanature. Carcassa 3 1/4"	48-87818A11 48-85632A40 48-816702A40 48-816704A40 48-816706A40 48-73140A40	3 3 3 3 3 3	12 1/4 10 7/8 10 3/4 10 1/2 10 3/8 10 1/8	9 11 12 13 14 15	R R R R R R	BlackMax BlackMax BlackMax BlackMax BlackMax BlackMax	**SOL1311-121-09** **SOL1311-116-11** **SOL1311-114-12** **SOL1311-111-13** **SOL1311-111-14** **SOL1311-110-15**	**SOL1313-118-09** **SOL1313-111-11** **SOL1313-108-12** **SOL1313-105-13** **SOL1313-105-14**			
4 Tiempos / Strokes / Tempi 25 HP (2006+) 30 HP (2006+) no/not/no Bigfoot 10 Estrías. Base Tohatsu. Carcasa 3" 10 Tooth spline. Tohatsu base. Gearcase 3" 10 Scalanature. Base Tohatsu. Carcassa 3"		3 3 3 3 3	9.9 9.9 9.9 9.9 9.9	9 10 11 12 13	R R R R R		**SOL5211-099-09** **SOL5211-099-10** **SOL5211-099-11** **SOL5211-099-12** **SOL5211-099-13**				
4 Tiempos / Strokes / Tempi 40, 50, 60 HP (1995+) 75, 90, 115 HP 2 Tiempos / Strokes / Tempi 40/50/60 HP 65, 75, 90 HP 80, 85, 100, 115, 125, 140 HP 15 Estrías. Carcasa 4 1/4". 15 Tooth spline. Gearcase 4 1/4". 15 Scalanature. Carcassa 4 1/4"	48-77338A45 48-77340A45 48-77342A45 48-77344A45 48-77346A45 48-77348A45 48-17310A46 48-17312A46 48-17314A46 48-16986A46 48-16988A46 48-16990A46 48-16992A46	3 3 3 3 3 3 3 3 3 3 3 3 3	14 14 13 3/4 13 1/4 13 12 3/4 14 14 13 3/8 13 1/8 13 13 1/4 13 1/2	11 13 15 17 19 21 10 12 14 16 18 20 22	R R R R R R R R R R R R R	BlackMax BlackMax BlackMax BlackMax BlackMax BlackMax Vengeance Vengeance Vengeance Vengeance Vengeance Laser II Laser II	**SOL1411-140-11** **SOL1411-138-13** **SOL1411-135-15** **SOL1411-133-17** **SOL1411-130-19** **SOL1411-130-21**	**SOL1413-133-13** **SOL1413-130-15** **SOL1413-128-17** **SOL1413-125-19** **SOL1413-125-21**	**SOL1431-140-11** **SOL1431-138-13** **SOL1431-135-15** **SOL1431-133-17** **SOL1431-130-19** **SOL1431-130-21** **SOL1431-140-11** **SOL1431-138-13** **SOL1431-135-15** **SOL1431-133-17** **SOL1431-130-19** **SOL1431-130-21**		

B= PALAS / Blades / Pale
D= DIÁMETRO / Diametre / Diametro
P= PASO / Pich / Passo

RR OTACIÓN / Rotation / Rotazione
(R) Derecha / Right / DX
(L) Izquierda / Left /SX

HP	R.O. OEM	B	D	P	R	TIPO TYPE	ALUMINIO ALUMINIUM ALLUMINIO		INOX STAINLESS STEEL		
							AMITA 3	AMITA 4	NEW SATURN	TITAN	HR TITAN 3
135-150-175HP 200, 220, 225, 250, 275, 300 HP 3.4L 90, 100, 115 HP Command Thrust 15 Estrías. Carcasa 4 3/4". 15 Tooth spline. Gearcase 4 3/4". 15 Scalanature. Carcassa 4 3/4"	48-78112A45	3	16	11	R	BlackMax					
	48-78114A45	3	16	13	R	BlackMax					
	48-78116A45	3	15	15	R	BlackMax	SOL1511-150-15	SOL1513-148-15			
		3	15	15	L		SOL1512-150-15				
	48-832828A45	3	14.8	17	R	BlackMax	SOL1511-148-17	SOL1513-145-17			
		3	14.8	17	L		SOL1512-148-17				
	48-832830A45	3	14.5	19	R	BlackMax	SOL1511-145-19	SOL1513-143-19			
		3	14.5	19	L		SOL1512-145-19				
	48-832832A45	3	14.3	21	R	BlackMax	SOL1511-143-21	SOL1513-140-21			
		3	14.3	21	L		SOL1512-143-21				
	48-832834A45	3	14.3	23	R	BlackMax	SOL1511-142-23				
		3	14.3	23	L		SOL1512-142-23				
	48-834850A45	4	15	16	R	Alpha 4		SOL1513-145-17			
	48-834852A45	4	14 1/2	18	R	Alpha 4		SOL1513-143-19			
	48-834854A45	4	14	20	R	Alpha 4		SOL1513-140-21			
	48-834855A45	4	14	20	L	Alpha 4					
	48-19838A46	3	15 3/4	15	R	Mirage Plus	SOL1511-158-15				
	48-19841A46	3	15 3/4	15	L	Mirage Plus	SOL1512-158-15			SOL1542-155-15	
	48-18278A46	3	15 1/2	17	R	Mirage Plus	SOL1511-155-17				SOL1571-155-17
	48-90159A46	3	15 1/2	17	L	Mirage Plus	SOL1512-155-17				SOL1572-155-17
	48-13700A46	3	15 1/4	19	R	Mirage Plus	SOL1511-153-19				SOL1571-153-19
	48-13701A46	3	15 1/4	19	L	Mirage Plus	SOL1512-153-19			SOL1542-150-19	SOL1572-153-19
	48-13702A46	3	15	21	R	Mirage Plus	SOL1511-153-21				SOL1571-150-21
	48-13703A46	3	15	21	L	Mirage Plus	SOL1512-153-21				SOL1572-150-21
	48-13704A46	3	14 3/4	23	R	Mirage Plus					SOL1571-148-23
	48-13705A46	3	14 3/4	23	L	Mirage Plus					SOL1572-148-23
		3	14 1/2	25	R						SOL1571-145-25

B= PALAS / Blades / Pale
D= DIÁMETRO / Diametre / Diametro
P= PASO / Pich / Passo

RR OTACIÓN / Rotation / Rotazione
(R) Derecha / Right / DX
(L) Izquierda / Left /SX

GUÍA DE NÚCLEOS
HUB KIT APLICATION CHAST
GUIDA MOZZI



RUBEX

MODELO MODEL MODELLO	REF. KIT	MODELO HÉLICE PROPELLER TYPE MODELLO ELUCHE
25 HP BigFoot (1999-05), 30HP BigFoot (2010+), 30HP 2/4 T/Stroke (1994-05), 30HP Sea Pro/Marathon (1994+), 35HP (1994-89), 402 & 500 (1974-84), 40-50HP (2 & 4 Tiempos / 2 & 4 Stroke / 2 & 4 Tempi) No/Not/No Bigfoot (1977+), 45HP (1986-89), 48HP Mariner, 55HP Sea Pro/Marathon (1995+), 60HP Mariner (1976), 60HP (2 & 4 Tiempos / 2 & 4 Stroke / 2 & 4 Tempi). No/Not/Non Bigfoot, Sea Pro/Marathon (1978+), 65HP (1972-76), 70HP (1983+), 80HP Mariner (1977) 13 Estrías / tooth spline / Scalanature 3 1/4" Carcasa / Gearcase / Carcassa	SOLRBX-114	C
40-60 HP Bigfoot, 40-140 HP (No/Not/Non 135HP) V4 Gearcase (1978+) 15 Estrías / tooth spline / Scalanature 4 1/4" Carcasa / Gearcase / Carcassa	SOLRBX-102	D
90HP, 115HP (Command Thrust) (2014+) 135HP (1987+), 150-300 HP (1978+) 15 Estrías / tooth spline / Scalanature 4 3/4" Carcasa / Gearcase / Carcassa	SOLRBX-102	E
Menos de /less than / Inferiore a 400HP Mercury Alpha One, Bravo One 15 Estrías / tooth spline / Scalanature	SOLRBX-102	E
225 EFI (4 Tiempos / 4 Stroke / 4 Tempi) Fabricado por/ manufactured by / fabbricati per YAMAHA 15 Estrías / tooth spline / Scalanature 4 3/4" Carcasa / Gearcase / Carcassa	SOLRBX-124	E

GUÍA HÉLICES ALUMINIO
PROPELLERS ALUMINUM CHART
GUIDA ELICHE ALLUMINIO

Modelo / Model / Modello C 30-75 H.P.
3 PALAS / 3 BLADE / 3 PALE

B	D	P	R	Ref.
3	12.1	9	R	SOL9311-121-09
3	12	10	R	SOL9311-120-10
3	11.6	11	R	SOL9311-116-11
3	11.4	12	R	SOL9311-114-12
3	11.1	13	R	SOL9311-111-13
3	11.1	14	R	SOL9311-111-14
3	11	15	R	SOL9311-110-15

Modelo / Model / Modello D 40-140 H.P.
3 PALAS / 3 BLADE / 3 PALE

B	D	P	R	Ref.
3	14	9	R	SOL9411-140-09
3	14	11	R	SOL9411-140-11
3	13.75	13	R	SOL9411-138-13
3	13.5	15	R	SOL9411-135-15
3	13.25	17	R	SOL9411-133-17
3	13.2	19	R	SOL9411-132-19
3	13.2	21	R	SOL9411-132-21

Modelo / Model / Modello E 135-300 H.P.
3 PALAS / 3 BLADE / 3 PALE

B	D	P	R	Ref.
3	15.5	11	R	SOL9511-155-11
3	15.3	13	R	SOL9511-153-13
3	16	13	R	SOL9511-160-13
3	15	15	R	SOL9511-150-15
3	15	15	L	SOL9512-150-15
3	14.8	17	R	SOL9511-148-17
3	14.8	17	L	SOL9512-148-17
3	14.5	19	R	SOL9511-145-19
3	14.5	19	L	SOL9512-145-19
3	14.3	21	R	SOL9511-143-21
3	14.3	21	L	SOL9512-143-21

RUBEX



Hélice de aluminio con núcleo intercambiable (no incluido).
Aluminium interchangeable hub propellers (not included).
Eliche in alluminio con mozzo intercambiabile (non incluso).

GUÍA HÉLICES INOX.
STAINLESS STEEL PROPELLERS APLICATION CHART
GUIDA ELICHE INOX

Modelo / Model / Modello C 30-75 H.P.
3 PALAS / 3 BLADE / 3 PALE

B	D	P	R	Ref.
3	11 5/8	11	R	SOL9331-116-11
3	11 3/8	12	R	SOL9331-114-12
3	11 1/8	13	R	SOL9331-111-13
3	11 1/8	14	R	SOL9331-111-14
3	11	15	R	SOL9331-110-15

Modelo / Model / Modello D 40-140 H.P.
3 PALAS / 3 BLADE / 3 PALE

B	D	P	R	Ref.
3	13 3/4	13	R	SOL9431-138-13
3	13 3/4	13	L	SOL9432-138-13
3	13 1/2	15	R	SOL9431-135-15
3	13 1/2	15	L	SOL9432-135-15
3	13 1/4	17	R	SOL9431-133-17
3	13 1/4	17	L	SOL9432-133-17
3	13	19	R	SOL9431-130-19
3	13	19	L	SOL9432-130-19
3	13	21	R	SOL9431-130-21

Modelo / Model / Modello E 90-140 H.P.
3 PALAS / 3 BLADE / 3 PALE

B	D	P	R	Ref.
3	14 1/2	15	R	SOL9531-145-15
3	14 1/2	15	L	SOL9532-145-15
3	14 1/4	17	R	SOL9531-143-17
3	14 1/4	17	L	SOL9532-143-17
3	14	19	R	SOL9531-140-19
3	14	19	L	SOL9532-140-19
3	14	21	R	SOL9531-140-21
3	14	21	L	SOL9532-140-21
3	14	23	R	SOL9531-140-23
3	14	23	L	SOL9532-140-23

Modelo / Model / Modello E 135-350 H.P.
3 PALAS / 3 BLADE / 3 PALE

B	D	P	R	Ref.
3	15 3/4	15	R	SOL9571-158-15
3	15 3/4	15	L	SOL9572-158-15
3	15 1/2	17	R	SOL9571-155-17
3	15 1/2	17	L	SOL9572-155-17
3	15 1/4	19	R	SOL9571-153-19
3	15 1/4	19	L	SOL9572-153-19
3	15	21	R	SOL9571-150-21
3	15	21	L	SOL9572-150-21
3	14 3/4	23	R	SOL9571-148-23
3	14 3/4	23	L	SOL9572-148-23
3	14 1/2	25	R	SOL9571-145-25
3	14 1/2	25	L	SOL9572-145-25

RUBEX



Hélice de acero inox. con núcleo intercambiable (no incluido).
Stainless steel interchangeable hub propellers (not included).
Eliche di acciaio inox con mozzo intercambiabile (non incluso).

ÍNDICE / TABLE OF CONTENTS / INDICE

REF-->R.O. / OEM

REF.	R.O. /OEM	PAG
ARC5362	50-834749	76
ARC5362	50-859171T	76
ARC5362	50-898265001	76
CDI134-6456-18	96455A18	83
CDI134-6456-18	96455T18	83
CDI134-6456-18		86-87
CEF500344		233
CEF500383		233-234
CEF500600		64
CEF500621		64
CM09411	9411	70
CM17264	17264T2	70-235-236
CM31640	31640Q4	195-201-205-234-235-236-237
CM31640A	31640Q4	195-201-205
CM34127	34127T2	69
CM34127A	34127T2	69
CM34762	34762A1	69
CM34762A	34762A1	69
CM3H6-60218-000	875208	183
CM3V1-60217-0	853762T01	185-233-234
CM42121	42121A2	187
CM42121A2	42121A2	70-187-233-234
CM43396	43396	69
CM43396A	43396	69
CM47820	47820	70
CM67F-11325-00	894079002	70
CM6G8-11325-00	825435	96
CM76214	76214	70
CM76214	76214Q5	197
CM76214		237
CM762145	76214Q5	205
CM762145A	76214	70
CM762145A	76214Q5	197-205
CM818298	818298A1	69-234-235-236-237
CM818298A	818298A1	69
CM820503	8205031	71
CM822157T2	822157T2	70-191-234-235-23-237
CM822777	822777Q1	70
CM8239121	8239121	70
CM823913		233-234
CM825271	8252711	69-234-235-236
CM825271A	8252711	69
CM826134	826134	70
CM826134	826134Q	195-197-203-205-234-235-236-237
CM826134A	826134	70
CM826134A	826134Q	195-197-203-205
CM826887M	826887M	70-107-234-235-236
CM880653	880653	69-237
CM880653A	880653	69
CM89026	89026	70
CM892227	893404	69-237
CM892227A	893404	69
CM89949	89949A1	69
CM89949A	89949A1	69
CM942860	94286T1	70
CM984325	98432Q6	70
CM984325A	98432Q6	70
CM984325A	98432T6	189
CMVERADO4KITA		74-237
CMVERADO4KITM		74-237
CMVERADO6KITA		74-237
CMVERADO6KITM		74-237
CHAJ6C		92-93
CHAL77JC4		92
CHAL78C		94
CHAL82C		94
CHAL82YC		92
CHAL87YCC		92
CHAL90C		92-94
CHAPROSU		95
CHAQL6VC		93-94-95
CHAQL78C		93-94-95
CHAQL78YC		92-93-94-95
CHARA8HC		92-94-234-235-236-237
CHARJ8C		92-93
CHARL82C		92-93-94
CHARL82YC		92-94
CHARL86C		92-94
GS11290		91
GS11291		91
GS11292		91
GS11294		91
GS30435		67
GS31001		67
GS31002		67
GS31022		65
GS31023		65
GS31025		65
GS31026	22-142131	65
GS31027	22-13563T-3	65
GS31028	22-13563T-3	65
GS31064		65
GS31065		67
GS31066		67
GS31067		67
GS31068		65
GS31069		65
GS31078	22831T03	65
GS31079	30185T3	65
GS31080	30185T3	65
GS31081		65
GS31082	22-13563T 7	65
GS31090		64
GS31095		64
GS31097		64
GS31099		64
GS31155		67
GS31156		67
GS31157		67
GS31166		67
GS31187		64
GS31189		64
LENS3213		66
LENS3227	YMM-2E227-00	66
LENS3227	YMM-2E227-01	66
MES3164M	828506	80
MES3164M	889956	80
MES3164M	875286TA1	80
MES3164M	881247A1	80
MP41000	87-88107A5	90
MP41070	87-17009A2	90
MP41070	87-17009A5	90
NGKB7HS	33-82371M	118
NGKB7HS-10	33-82370M	94-116
NGKB8HS-10		94
NGKB9HS-10		92
NGKBP6HS		92
NGKBP7HS-10		92
NGKBP8HN-10		92-93-94
NGKBP8HS-10		93-94
NGKBP8HS-15		92-94
NGKBPR6HS-10		92-94
NGKBPR7HS		92
NGKBPR7HS-10		92-94
NGKBPZ8HN-10		92-93
NGKBPZ8HS-10		93-94-95
NGKBR5HS		92-94
NGKBR6HS		92-94
NGKBR6HS-10	33-11458M	115
NGKBR6S		92-93
NGKBR7HS	33-53098	92-93-94-112
NGKBR7HS-10	33-41263M	115
NGKBR8HIX		93-94-95
NGKBR8HS		93-94-95
NGKBU8H		93-94-95
NGKBUZ8H		93
NGKBUZHW		92-93-94-95
NGKBUZHW-2		92-93-94
NGKBZ7HS-10		93
NGKCPR6EA-9		94
NGKCR6HS	33-827859	92-94-96
NGKDCPR6E	33-803507	92-94-98-233-234
NGKDCPR6EIX		92-94
NGKDPR6EA-9	33-827858	92-94-105-107-233-234-235-236
NGKILFR6G-E		237
NGKLFR4AE		93-237
NGKLFR5A-11		92-94-237
NGKLFR6A-11		94
PAF15-00000006	18842M	112
PAF15-00000014	27-8354272	101-142-146
PAF15-04000002	22-479452	107
PAF15-04000003	27-11754M	107-110-118
PAF15-04000005	22-83326M	96-101
PAF15-05000011		101-107
PAF15-05000012		101
PAF15-05000013		101
PAF15-05000014		101
PAF15-06000016	16147	185
PAF15-07000001	17-825689	96-101-105
PAF15-07000002	835392	103-233-234
PAF15-07000002	57-835392Q	69
PAF15-07000007	25-853525	149
PAF15-07000013		101
PAF15-07000017	27-835383001	150
PAF15-07000024	855691	103
PAF15-07000028	10-855677	105
PAF15-07000031	825212	107
PAF15-07000031	855676003	101
PAF15-07000100	27-850836	105-136-142
PAF15-07000600	855685T	87
PAF15-07010000	8M0055024	101
PAF15-07010003	822625	101-107
PAF15-07010006	8830591	96
PAF15-07010006	22-822644	101
PAF15-07010007		101
PAF15-07010008	855678	101-233-234
PAF15-07010009	25-825040	107
PAF15-07010009	27-825040	101
PAF15-07010011	855776	101
PAF15-07010012	855779	101
PAF15-07010014	26-850850	101
PAF15-07010018	834952002	148
PAF15-07010018	27-834952	177
PAF15-07010018	27-834952002	101
PAF15-07010019	834953T02	101
PAF15-07010021	8250311	101-107-110
PAF15-07010022	27-824853	101-107-176
PAF15-07010024	31-834960	103
PAF15-07010026		101
PAF15-07010027	25-855690	103
PAF15-07010100	87-803538	90
PAF15-07020001	700-834963	103-124-127
PAF15-07020005	53-16057	99-124
PAF15-07020005	53-82343M	103
PAF15-07020005	53-82345M	124
PAF15-07020006	41-825713	103-124
PAF15-07020100	600-834961A1	103-127
PAF15-07030000	400-834957	103-127
PAF15-07030003	43-834955	103
PAF15-07030004	12-850843	103
PAF15-07030005	1-855679	103
PAF15-07030006	26-855680	103-133
PAF15-07030007	26-855681	103-133
PAF15-07040000	900-835430A1	105
PAF15-07040001	850838	105
PAF15-07040002	850839	105
PAF15-07040004	855959	105
PAF15-07040005	24-850840	105
PAF15-07040006	822650	109
PAF15-07040007	28-822651	105-109
PAF15-07040008	26-825455	103
PAF15-07040009	880135	105
PAF15-07040011	880134	105
PAF15-07040012	825451	105
PAF15-07040013	24-825453	105
PAF15-07040014	24-825452	105
PAF15-07040015	850842	105
PAF15-07040016	27-853523	103-124
PAF15-07040017	12-82710M	103
PAF15-07040018	43-834973	103
PAF15-07040200	834956	103
PAF15-07040301	825451	105
PAF15-07040303	10-825046	105-109
PAF15-07040303	10-825046001	98
PAF15-07040304	11-826150	105-109
PAF15-07040304	11-826150001	98
PAF15-07040500	834967A1	103-124
PAF15-07050001	834954	105
PAF15-07050002	850837	105-145
PAF15-07050003	25-8527681	103

REF.	R.O. /OEM	PAG
PAF15-07050004	825490	105-107
PAF15-07050004	859578A1	96
PAF15-07050006	822650	105
PAF15-07060001	853811008	80
PAF15-07080000	35-826964T	67-234-235-236-237
PAF15-07140000	835389A2	161
PAF15-07140000	835389T02	161
PAF15-07140000	835389T1	161
PAF15-10030001		105
PAF25-00000013	8252312	146
PAF25-00000013	27-8252310	107
PAF25-00000013	27-8M0069692	146
PAF25-00000013		142
PAF25-00000014	17-825010	107
PAF25-03000008		107
PAF25-03000009		107
PAF25-03000011		107
PAF25-05000002	10-82503395	107
PAF25-05000004	25-833103	107-145
PAF25-05000005	830272A1	107
PAF25-05000007	8556692	107
PAF25-05000011	25-33466	150
PAF25-05000021	833102	109
PAF25-05000022		109
PAF25-05000023	831294	69-109
PAF25-05000023		234-235-236-237
PAF25-05000023	57-8M0065179	69
PAF25-05000024	28-91800	110
PAF25-05000026	11-81773M	109
PAF25-05010000	2806-830267T3	107
PAF25-05010106	8525601	107
PAF25-05010107	35-8548091	107
PAF25-05010108	27-8547801	107
PAF25-05010109	832734A2	107
PAF25-05010111	27-827610	110
PAF25-05010111	27-830298	107-148-177
PAF25-05010112	883336T1	107
PAF25-05010113	22-996642	107
PAF25-05010302-1	23-825024	109
PAF25-05010302-2	23-8250241	109
PAF25-05020001	2418-830269A1	109-127
PAF25-05020002	26-832013	109-110-133
PAF25-05020003	26-825027	109-110-133
PAF25-05020100	713-856064A1	109-124-127
PAF25-05020101	702-833098A1	109
PAF25-05020105	41-825016	109-124
PAF25-05020106	40-825017	109-124
PAF25-05020200	650-825018A1	109-127
PAF25-05020203-1	23-825021	109
PAF25-05020203-2	23-8250212	109
PAF25-05020204	10-825010	109
PAF25-05020301	701-8318751	109
PAF25-05020310	652-831876A1	109
PAF25-05040000	27-830270	107-136
PAF25-05040000	8M0049885	136-142
PAF25-05050001	822649	109
PAF25-05050002	832990	109
PAF25-05050003	12-825044	109
PAF25-05050005	24-823678	109
PAF25-05050006	10-827607	107
PAF25-05050007	27-827610	107
PAF25-05050008	830274	109
PAF25-05050009	825050	109
PAF25-05050011	24-825052	109
PAF25-05050012	24-825052	109
PAF25-05050013	25-826153	109
PAF25-05050013	25-826154	110
PAF25-05050014	25-826153	110
PAF25-05050014	25-826154	109
PAF25-05050015	25-826152	109-110
PAF25-05050016	17-825956	109
PAF25-05050017	833104	109
PAF25-05050018	12-4002319	109
PAF25-05050019	10-82641030	109
PAF25-05050021	26-825048	109-110
PAF25-05050100	830271T2	107
PAF25-05050200	2419-82500935	109
PAF25-05050300		109
PAF25-05050301	825045A2	109
PAF25-05050400	852388A1	109
PAF25-05050400	852388T1	124
PAF25-05060002	855219	150
PAF25-05060003	878431	150
PAF25-05080004	855837	150
PAF25-05120000	339-859738T1	88
PAF25-05130000	826398T3	161

REF.	R.O. /OEM	PAG
PAF4-03000023	22-95368 3	183
PAF4-03000023	95368 3	185
PAF4-03000024	95220	185
PAF4-03000024	27-95220	183
PAF4-04000008	25-825492	105
PAF4-04000011	27-824853	110
PAF4-04000019	28-18856M	109
PAF4-04000019	28-825666001	99
PAF4-04000030		107
PAF4-05000300	35-16248	68-233-234
PAF8-00000002	803775006	95
PAF8-00000003	10-89514001	97
PAF8-00000004	27-835427003	97-142-146
PAF8-00000100	895167001	95
PAF8-00000200	803512001	97
PAF8-005030010	850842001	98
PAF8-02000006L	803755005	185
PAF8-02000006S	803755004	185
PAF8-02000007	804899002	185
PAF8-02000100	853771004	95
PAF8-04000003	803740 1	185
PAF8-04000004-1	853795 5	185
PAF8-04000005	161587	216
PAF8-04000005	16158 7	185
PAF8-04000006	161586	216
PAF8-04000006	16158 6	185
PAF8-04000007	8037531	214
PAF8-04000007	803753 1	185
PAF8-04000008	16158 5	185
PAF8-04000009	803750A02	185
PAF8-04000009	803752A02	213
PAF8-04000010	8037511	214
PAF8-04000010	803751 1	185
PAF8-04000012	16140	185
PAF8-04000012-1	16141	185
PAF8-04000012-2	813277	185
PAF8-04000013	804903	185
PAF8-04000014	803741 1	185
PAF8-04000015	895156	185
PAF8-04000016	895155	185
PAF8-04000019	803743002	185
PAF8-04000021	17-9521811	231
PAF8-04000021	95218 11	185
PAF8-04000101	95348	185
PAF8-04000200	803748 1	185
PAF8-04000301	803744002	185
PAF8-04000302	892777002	185
PAF8-04000303	803745 1	185
PAF8-04000305	16152	185
PAF8-04010000	16150	185
PAF8-04010000	803739 1	185
PAF8-04020001L	803738005	185
PAF8-04020001S	803738004	185
PAF8-04040001	8037632T03	185
PAF8-04040002	16131	185
PAF8-04040004	16130	185
PAF8-05000002	27-803508017	145
PAF8-05000002	27-803508017	98
PAF8-05000004	57-895120	98
PAF8-05000004		233
PAF8-05000004	57-895120	69
PAF8-05000009	27-853525001	150
PAF8-05000017	32-895153	97
PAF8-05000024	35-851848003	97
PAF8-05000025	54-816311T	97
PAF8-05000100	27-850836001	98-136-142
PAF8-05000300	803844T01	89
PAF8-05000800	35-895152002	97
PAF8-05010000	878-815013T06	97
PAF8-05010002	22-822644001	97
PAF8-05010004	27-834952001	97-148-177
PAF8-05010005	27-853702005	97-176
PAF8-05010009	31-834960T08	99
PAF8-05010012	26-855681001	99
PAF8-05010014	43-834955001	98
PAF8-05010015	895119	98
PAF8-05010016	11-855679001	98
PAF8-05020001	400-834957T01	99-127-133
PAF8-05020101	700-834963A02	99-124-127
PAF8-05020102	39-8M0055809	99-124
PAF8-05020105	41-825713001	99-124
PAF8-05020200	600-834961002	99-127
PAF8-05030001	850838T01	98
PAF8-05030002	850839T01	98
PAF8-05030004	855959001	98
PAF8-05030005	24-803554005	98
PAF8-05030006	822650001	98
PAF8-05030007	28-803556	98

REF.	R.O. /OEM	PAG
PAF8-05030008	834956005	98
PAF8-05030009	24-825452001	98
PAF8-05030011	26-825455001	98
PAF8-05030012	27-853523001	98-124
PAF8-05030015	12-895118001	98
PAF8-05030100	900-835430T03	98
PAF8-05030200	850841002	98
PAF8-05030300	834967T03	124
PAF8-05030300	834967Y03	98
PAF8-05030400	43-834973001	98
PAF8-05040000	339-895110T01	156
PAF8-05090000W	855944T01	89
PAGB/T1099-1979	28-825666	103
PAGB/T3452.1-35.5x1.	25-825057003	149
PAGB/T5287-6	12-825498	103
PAGB/T5782-M6X125		109
PAGB/T5782-M6X35	10-88348935	107
PAGB/T5782-M8X35	10-857139	107
PAGB/T5782-M8X80	10-82506182	107
PAGB/T5783-2000	10-41884M	101
PAGB/T5783-2000	10-43092M	101
PAGB/T5783-2000	10-82500930	101
PAGB/T5783-2000	10-8257021	101
PAGB/T5783-2000	10-826957M	103
PAGB/T5783-2000	10-850879	103
PAGB/T5783-2000	10-855778	101
PAGB/T5783-2000		101-105
PAGB/T5783-M6X20	825702	105
PAGB/T5783-M6X20	10-40011128	107
PAGB/T5783-M6X25	10-82500925	105-107
PAGB/T5783-M6X25	10-88348935	107
PAGB/T5783-M6X35	10-88348935	107
PAGB/T97.1-6	12-16826	183
PAGB/T97.1-8		101-103-107-109
PAGB3452.1-82	25-8250572	150
PAGBT3452.1-97.5X1.8	25-854722	107
PAHT-2.5x60		107
PAJASOF40431-025	25-825492	107
PAJASOF40431-025	25-8M0052669	96
PAJASOF40431-025		110
PAPS2700.04.03	26-822647	105-109
PAT15-04000010	825212T02	96
PAT3.6-04000006	28-95229	98
PH130-0006	50-853805T03	75
PH130-0007	50-92669M	76
PH130-0007	81490M	76
PH130-0007	97072M	76
PH130-0009	50-819968	77
PH130-0009	50-819968-1	77
PH130-0009	50-819968-2	77
PH130-0009	50-819968-3	77
PH130-0009	50-819968-4	77
PH130-0009	50-819968T4	77
PH130-0009	50-853869	77
PH130-0009	50-853869-T	77
PH130-0010	50-29105	76
PH130-0010	50-30842	76
PH130-0010	50-31976	76
PH130-0010	50-32411	76
PH130-0010	50-37274	76
PH130-0010	50-45822	76
PH130-0010	50-48643	76
PH130-0010	50-55304A-1	76
PH130-0010	50-673341	76
PH130-0010	50-87788	76
PH130-0011	50-44369	75
PH130-0011	50-44369A1	75
PH130-0011	50-73521	75
PH130-0011	50-73521T	75
PH130-0014	50-825991A2	75
PH130-0015	50-44369A1	76
PH130-0015	50-73521	76
PH130-0019	50-66015	76
PH130-0019	50-66015T1	76
PH130-0021	50-90983T1	74
PH130-0021	50893889T	74
PH130-0021	5090983A1	74
PH130-0021	8M0033984	74
PH130-0022	50-820193	76
PH130-0022	50-820193-1	76
PH130-0022	50-820193-T1	76
PH130-0023	50-818445-2	77
PH130-0023	50-818445-3	77
PH130-0023	50-818445-5	77
PH130-0024	50-822462	75
PH130-0024	50-822462T1	75

REF.	R.O. /OEM	PAG
PH130-0024	50-893890T	75
PH130-0024	822462T1	75
PH130-0024	893890T	75
PH130-0025	50-819271	76
PH130-0025	50-820193A1	76
PH130-0028	50-854636T	75
PH130-0028	50-859170T	75
PH130-0028	50-884045T	75
PH130-0028	50-888160T	75
PH130-0028	50-893897T	75
PH130-0028	854636T	75
PH130-0028	859170T	75
PH130-0028	893887T	75
PH130-0029	50-830308T	75
PH130-0029	50-859169T	75
PH130-0029	50-888151T	75
PH130-0029	50-893886T	75
PH130-0030	50-833153	77
PH130-0030	50-833153-1	77
PH130-0030	50-833153-2	77
PH130-0030	50-833153-3	77
PH130-0030	50-833153-5	77
PH130-0031	50-832997 1	77
PH130-0031	50-832997 2	77
PH130-0033	50-859377T	75
PH130-0033	50-884044T	75
PH130-0033	50-888161T	75
PH130-0033	50-893888T	75
PH130-0034	50-852570T	75
PH130-0034	50-857065	75
PH130-0034	50-859168	75
PH130-0034	50-859168T	75
PH130-0040	50-32403	75
PH130-0040	50-30829	75
PH130-0040	50-37345	75
PH130-0040	50-38890	75
PH130-0040	50-38890A1	75
PH130-0040	50-55601A	75
PH130-0040	50-55601A2	75
PH130-0041	50-44369A1	76
PH130-0041	50-57485	76
PH130-0041	50-60315	76
PH130-0041	50-65436	76
PH130-0041	50-66015	76
PH130-0041	50-66015-2	76
PH130-0041	50-88119	76
PH130-0041	50-893891T	76
PH130-0042	50-57465A1	76
PH130-0042	50-58330	76
PH130-0042	50-60975	76
PH130-0042	50-72467	76
PH130-0046	50-44415	77
PH130-0046	50-77141	77
PH130-0046	50-79472	77
PH130-0046	50-79472 1	77
PH130-0046	50-884238T	77
PH130-0047	480955	76
PH130-0047	490955	76
PH130-0047	50-583869	76
PH130-0047	50-616955-1	76
PH130-0047	50-819085	76
PH130-0047	50-819085-1	76
PH130-0047	50-819085-T1	76
PH130-0049	50-814980M	75
PH130-0049	50-96359M	75
PH130-0049	50-97693M	75
PH130-0055	50-804312T1	76
PH130-0057	50-881368T	76
PH130-0057	50-881368T1	76
PH130-0057	50-881368T2	76
PH130-0061	50-803835T02	74
PH130-0062	50-814980M	75
PH130-0066	50-853329T	77
PH130-0066	50-853329T01	77
PH130-0066	50-892339T	77
PH130-0066	50-893892T	77
PH130-0072	50-41583	75
PH130-0072	50-41583T	75
PH130-0074	50-888333T	77
PH130-0074	50-888333T1	77
PH200-T003	19217A1-A5	79
PH200-T003	809885A2	79
PH200-T003	818903A1	79
PH200-T003	819479A1	79
PH200-T003	819480A1	79
PH200-T003	819762A4-A7	79
PH200-T003	81977A8-A9	79
PH200-T003	822870A1	79

REF.	R.O. /OEM	PAG
PH200-T003	830250A3-T3	79
PH200-T003	832021A1-T4-A2-T2	79
PH200-T003	855654A1-T2	79
PH200-T008	823653A5/A9	79
PH200-T008	92459A4	79
PH200-T010	828708	79
PH200-T010	828708T	79
PH200-T010	8782654A2	79
PH200-T010	878265A4	79
PH200-T015	17649A1/A02	79
PH200-T033	824051	79
PH200-T033	830250A6	79
PH300-0019	821663	80
PH300-0019	821663A1	80
PH300-0030	889955	80
PH300-0030	875285T1	80
PH300-0030	881248T	80
PH300-0031	889956	80
PH300-0031	875286A1	80
PH300-0031	881247A1	80
PH300-0047	50-897755T	80
PH300-0047	8M0063970	80
PH300-0048	892940T/T01	80
PH350-0003	62351	80
PH350-0003	78614	80
PH350-0003	816770	80
PH350-0003	332-2910	80
PH350-0003		85-86-87
PH375-0011	25661-1	77
PH375-0028	89-68258A4	78
PH375-0031	65057A1	77
PH375-0034	89-818997A1	78
PH375-0034	89-850187T1	78
PH375-0036	89-818999A1	78
PH375-0036	89-818999A2	78
PH375-0036	89-825842A1	78
PH375-0036	89-850188A1	78
PH375-0037	89-817109A1	78
PH375-0037	89-817109A2	78
PH375-0037	89-817109A3	78
PH400-0002	398-832075A3-A4-A5-A6-A9-A12	81
PH400-0002	398-9873A22-A28	81
PH400-0002		85-86-87
PHSEL-239	89-96158	77
POWERHEAD20-25		107
POWER-HEAD9.9-15	802733A98	105
RAC31871	35-884380T	68-237
RAC320R-RAC-01		66
RAC320R-RAC-03		66
RAC490R-RAC-01		66
RACPFF5510		66
RACS3213		66
RACS3227		237
RACS3227	YMM-2E227-00	66
RACS3227	YMM-2E227-01	66
REC10-30720	10-30720	231
REC10-48408	10-48408	187
REC10-49908	10-49908	189
REC10-69570	10-69570	178
REC10-79953Q04	10-79953A2	231
REC10-79953Q04	10-79953Q04	197
REC10-79953Q04	10-79953Q2	187-189-191-193-195-199-201-203-205
REC10-806327	10-806327	197-205
REC10-816928	10-19937-16	205
REC10-816928	10-816928	197
REC10-82684430	10-826844-30	187-195
REC10-91012	91012	120
REC10-94320	94320	121-123
REC10-94320	10-94320	122
REC10-96411	10-96411	202-231
REC11-13436	11-13436	202
REC11-16147Q	16147	183
REC11-31990Q02	11-31990A2	233
REC11-35921	11-35921	195-197-203-205-208
REC11-4011912	11-40119-12	189
REC11-401378	11-401378	195
REC11-40140	11-40140	187
REC11-52707Q1	11-52707A1	233
REC11-52707Q1	11-52707Q1	202-204-233
REC11-52707Q1	11-827614Q	205
REC11-69578Q1	11-69578	232
REC11-69578Q1	11-69578A1	191-193-201
REC11-8267089	11-13438	201-202
REC11-859124	11-45812	201

REF.	R.O. /OEM	PAG
REC11-88228	11-88228	189
REC11557		206-207
REC11770		206-207
REC12-12577	12-12577	195
REC12-16448	12-16448	187
REC12-191833	12-19183	232
REC12-191833	12-19183-2	205
REC12-191833	12-19183-3	187-189-191-193-195-201-203
REC12-191833	12-20260	199-232
REC12-29245	12-29245	189-191-201-202
REC12-29245	12-89302	189
REC12-31211Q01	13171	232
REC12-31211Q01	12-825467	205-210-232
REC12-31211Q03	12-31211A2	232
REC12-31211Q03	12-31211A3	203-205
REC12-38453	12-38453	148-201
REC12-41369	12-41369	187
REC12-45176	12-45176	195
REC12-76451	12-76451	178
REC12-77674	12-77674	197-201-203-205-232
REC12-78910	12-78910	203
REC12-822248	12-822248	187
REC12-835467Q01	13171	232
REC12-835467Q01	12-835467-1	203
REC12-85303	12-85303	178
REC12-855941	12-855941	195
REC12-86645	12-86645	232
REC12-86645	12-86645-1	189-191
REC12-8M0012298	812876	121
REC12-94182	12-94182	178
REC12094	46-43024A7	194-213-219-222-223-224
REC12415	12415	90
REC12596T2	12596T2	195
REC13-423511	13-42351-1	203-205-232
REC13191Q01	13191A1	195-232
REC13191Q01	75282A1	232
REC13191Q01		210
REC13914Q02	11-13914A2	233
REC1395-2015	1399-1717	158
REC1395-2015	1399-2015	158
REC1395-2015		167-168-169-170-171
REC1395-48401	1395-4808-1	158-169-170-171-172
REC1395-5198	1399-5135	158
REC1395-5198	1399-5198	158
REC1395-5198		167-168-169
REC1395-6200	1395-6200	158-169-170
REC1395-6452	1395-6452	158
REC1395-6452	1395-8506	158
REC1395-6452	21-30430A1	172
REC1395-6452	23014A1	172
REC1395-6452		172-173
REC1395-7623	1395-7623	160
REC1395-7623	1395-9267	160
REC1395-7623		172-173
REC1395-7824	1395-7824	160-172-173
REC1395-8112231	1395-811223-1	158-168-169-170-171
REC1395-811690-1	1395-811690-1	160-172-173
REC1395-811691-2	1395-811691 2	157-159-172-173
REC1395-811691-3	1395-811691 3	157-159
REC1395-823635-4	1395-823635-4	157-159
REC1395-8318	1395-8318	160-167-168-169-170-171-172
REC1395-8673	1395-8673	160
REC1395-8673	1395-8983	160
REC1395-8673		167-168-169-170-171-172
REC1395-9022	1395-9022	160-167-169
REC1395-9024	1395-9024	159-169
REC1395-9594	1395-9293	161-168-169-170-171
REC1395-9595-1	1395-9595-1	160-168-169-170-171
REC1395-9650		157-159
REC1395-9651	1395-9651	158-168-169
REC1395-97611		159-167-168
REC1399-1473	1395-9258	160
REC1399-1473	1399-1138	160
REC1399-1473		167-168-169-170-171
REC1399-3938	1399-3938	67
REC1399-5137	1399-5137	158-167-168-169
REC1399-99	1399-99	150
REC14-18323	14-18323	205

REF.	R.O. /OEM	PAG
REC14-76281Q	14-76281	191-193-201-232
REC14-79447	14-79447	203
REC14307T01	14307, A1	162
REC14307T01	14307T01	162
REC14307T01		164
REC14334A3	14334A3	193-214-219-222
REC14355		126-127
REC14365		126-127
REC14450		126-127
REC14460		126-127
REC14479-1	14479-1	178
REC14480	14480	178
REC14586	14586	174-175-235-236-237
REC14586A3	14586A3	175
REC14586A7	14586A7	175-176
REC1463-9382	32193A2	88
REC1463-9382	806529A1	88
REC14857A16	14857A10, A16	89
REC15-201		95
REC15-202		95
REC15-203	84-813715A1	95
REC15-204		95
REC15-38657A1	15-38657A1	197
REC15-42637A1	15-42637A1	203-205-231
REC15-44491A1	15-44491A1	195-205
REC15-47397A1	15-47397A1	203-205-231
REC15-812770A1	15-812770A1	193
REC15-884327A02	15-884327A01	197
REC15-891936A01	15-891936A01	197
REC15-8M0063265	15-44492A1	195
REC155278A1	155278A1	166-168-169-171-172
REC16058	16058T	89
REC16061T04	16061T04	83
REC16066004	16066004	90
REC16157	16157	214
REC16159	16159	183-214
REC1623-822442A19	1623-822442A19	179
REC1623-822442A20	1623-822442A20	179
REC1623-859399T13	1623-859399T13	179
REC1623-859399T14	1623-859399T14	179
REC16253	16253	156-160-167
REC1647-9148T81	1647-9148T81	179
REC1647-9148T82	1647-9148T82	179
REC1647-9148T84	1647-9148T84	179
REC1647-9148T85	1647-9148T85	179
REC16496	16496	178
REC1667-9011G90	1667-9011G70	179
REC1667-9011G90	1667-9011G90	179
REC1667-9011J41	1667-9011J41	179
REC1667-9011R6	1667-901110, 11	179
REC1667-9011R6	1667-901167, 78	179
REC1667-9011R6	1667-9011G51	179
REC1667-9011R6	1667-9011J6	179
REC1667-9011R6	1667-9011R6	179
REC17-43043	17-43043	193
REC17-822369	17-822369	191
REC17-828356	17-828356	197-203-205
REC17-85096	17-85096	189
REC17-85500	17-85500	189
REC17-85593	17-85593	189-191
REC17-8M0020942	17-38113	193-201
REC17-8M0084243	17-78905	203
REC17-8M0084681	17-30632	195-197-203-205-231
REC18-5007		91
REC18-5012		91
REC18495A13	18495A4-5-6-8-13	84
REC18495A26		86-87
REC18495A26	18495-A10-12-15-18-19-26	84
REC18495A30	18495A9, A14, A15, A20, A21, A25, A30	84-85
REC19052A8	19052A1, 2, 3, 4, 5, 6, 8	84-85-86
REC19271-1	19271-1	160-169
REC19273	19273	161
REC19291A3	19291A3	191-193
REC19643	19643	232
REC19700A2	19700A2	193-214-219-222
REC19755T7	19755T7	197
REC200		90
REC20843	20843	193-201
REC21-13424A1	21-13424A1	165-168-169
REC21-30430A1		168-169-170-171
REC21-30430A13	21-30430A13	165-170
REC21-30430A14	21-30430A14	166-170-171-172
REC21-30430A3	21-30430A3	167-169-170-171-172
REC21-30430A4	21-30430A4	167-169
REC21-30430A7	21-30430A7	166-171-172
REC21-42990A10	21-42990A10	165-168-169-170-171-172-173
REC21285		233
REC21307		233
REC22-424254	22-424254	67
REC22-67892A05	22-67892A1	187-189-191-193-195-201-203-205-231
REC22-687271	22-687271	177
REC22-68728	22-68728	177
REC22-8189941	22-8189941	67
REC22-8M0001721	22-8M0001721	66
REC22215		233
REC23-29804T	23-29804	202-232
REC23-41367	23-41367	187
REC23-420911	23-42091-1	187
REC23-43045	23-43045	193
REC23-43052A4	23-43052A4	195
REC23-77631A2	23-77631A2	201-203
REC23-813696A2	23-813696A2	193
REC23-815921A21	23-815921A4	205
REC23-815921A21	23-815921A4-A10	230
REC23-821927	23-821927	187
REC23-823943	23-823943	187
REC23-823944	23-823944	187
REC23-824108	23-824108	203-205
REC23-85095	23-85095	189
REC23-85557	23-85557	189
REC23-86215	23-86215	199
REC23-891919001	23-891919001	197
REC23014A1		168-169-170-171
REC24-13421	24-29340A1-T1	74
REC24-30893	24-30893	193-195-197-203-205-231
REC24-38114	24-38114	191-201-231
REC24-42996	24-42996	178
REC24-47968	24-47968	178
REC24-64878	24-64878	178
REC24-78962	24-78962	203
REC24-79910	24-79910	203
REC24-815418	24-815418	193
REC24-88680	24-88680	189
REC24-90392	24-90392	178
REC2411-827954T2	827954T	120-127
REC24942		66
REC24950		66
REC24952		66
REC25-20081	25-20081	132
REC25-20273	25-20273	201-215
REC25-21836	25-21836	205
REC25-25439	25-25439	201-203
REC25-30224	25-30224	193
REC25-30271	25-30271	202-215
REC25-30529	25-30529	199
REC25-31534	25-31534	205
REC25-31534	25-896524	197-203
REC25-32546	25-32546	132-134
REC25-33145	25-33145	187
REC25-33465	25-54029	132-134-135
REC25-35027	25-35027	205
REC25-36318	25-36318	205
REC25-36318	25-896322	197
REC25-45258	25-45258	193
REC25-457101	25-45710	195
REC25-62700	25-62700	132-134-135
REC25-62706	25-67207	132-133-135
REC25-64872	25-64872	178
REC25-67202	25-69202	189
REC25-80863	25-20863	132
REC25-80863	25-815460	191
REC25-80863		133
REC25-809086	25-809086	163
REC25-815460	25-815460	193
REC25-818573	25-818573	145
REC25-821308	25-821308	191
REC25-822236	25-822236	187
REC25-823683	823683	121-123
REC25-823683	25-64067	122
REC25-823683	25-823683	132
REC25-823683		134-135
REC25-854639	25-854639	178
REC25-85549	25-85549	189
REC25-86203	25-86203	189-215
REC25-89497	25-89497	132-135
REC25-896523	25-896523	134-197
REC25-90011	25-90011	132-203-205
REC25000		65
REC25010		65
REC25020		65
REC25030		65
REC26-00173	26-85107	145
REC26-12224	26-12224	145-203-205
REC26-12709	26-12709	145
REC26-14240	26-14240	145
REC26-16051	26-16051	111
REC26-16130	16130	183
REC26-16162	26-16162	183
REC26-16977	26-16977	132-145-203-229-230
REC26-24590	26-24590	145-229-230
REC26-30913	26-30913	145-199-229
REC26-32511	26-32511	145
REC26-33467	26-33467	145-229
REC26-33613	26-33613	187-199
REC26-36558	26-36558	199
REC26-38452	26-38452	201
REC26-38970	26-38970	202-230
REC26-41132	26-41132	189
REC26-413651	26-41365-1	187
REC26-41365A3	26-41365A3	187-226-228
REC26-419533	26-41953 3	132
REC26-421021	26-42102-1	187
REC26-42133	26-42133	187
REC26-43035	26-43035	194-195
REC26-43035A4	26-43035A4	194-227-228
REC26-43036	26-43036	145-194-195-229-230
REC26-43993	43993	123
REC26-43993	26-43943	145
REC26-43993	26-43993	121-122-132
REC26-45587	26-45587	145
REC26-55682	26-32911	145
REC26-55682	26-55682	145-229-230
REC26-55682A1	26-55682A1	202-227-228
REC26-56397	26-56397	132-133-145
REC26-56788		229
REC26-62818	26-62818	145
REC26-66022	26-66022	187-199
REC26-66301	26-66301	132-134
REC26-66302	26-66302	132-133-205
REC26-66303A1	26-66303A1	227-228
REC26-69188	26-69188	145-191-193-201-229
REC26-69189	26-69189	145-191-193-201-229
REC26-70080	26-89236	145
REC26-70081	26-70081	145-195-229-230
REC26-72785	26-72785	145
REC26-76127	26-41131	189-229
REC26-76868	26-14077	145
REC26-76868	26-76868	145-195-203-205-229-230
REC26-77066A1	26-77066A1	199-226-228
REC26-79831	26-79831	145-201-229
REC26-79831A1	26-79831A1	200-227-228
REC26-803514	25-803514	114-133
REC26-807006	26-18816	145
REC26-814669	26-814669	193
REC26-814669A2	26-814669A2	192-227-228
REC26-814670	26-814670	193
REC26-8164641	26-816464	145
REC26-8164641	26-816464-1	193-195-197-201-203-205
REC26-8164641		229-230
REC26-816575A2	23-29804	231
REC26-816575A2	26-816575A2	197-205
REC26-816575A4	26-816575A4	204-227-228
REC26-816575A5	26-816575A5	204-227-228
REC26-8173971	817397 1	120
REC26-820645A1	26-820645A1	227
REC26-821092	26-821092	145
REC26-821309	26-821309	191
REC26-821310	26-821310	191
REC26-821928	26-821928	187
REC26-823894	26-68493	145
REC26-830749	26-830749	197
REC26-830749A01	26-830749A01	196
REC26-830898	26-830898	132-135
REC26-85090001	26-85090	189
REC26-85090A1	26-85090A1	189-226-228
REC26-85090A2	26-85090A2	189-226-228
REC26-85370711	26-85370711	114
REC26-8537077		133

REF.	R.O. /OEM	PAG
REC26-859093	26-815449	132-135
REC26-880596502	26-880596502	163
REC26-888483	26-888483	197
REC26-888483	26-888906	197
REC26-888920	26-888920	197
REC26-888921	26-888921	197
REC26-89238	26-89238	145-203-230
REC26-89238A2	26-89238A2	227-228
REC26-897153	26-90063	145-199-229
REC26-90562	26-90562	145-201-229-230
REC26-94038	26-94038	145-229-230
REC26-965031	26-96503	145
REC26-99325	26-99325	187
REC27-11338A88	27-11338A88	141-144
REC27-127754	27-12775-2	152
REC27-134612	27-134612	151
REC27-13461A99	27-13461A99	140-144
REC27-139376	27-13937-6	151
REC27-139581	27-13958-1	155
REC27-14318005	27-14318-3	176
REC27-14697A87	27-14697A87	141-144
REC27-151724	27-15172-3	151
REC27-18785T	27-18785T	137-144
REC27-19202001	27-19202	187-216
REC27-192043	27-19202	216
REC27-192043	27-19204-3	187
REC27-19205002	27-19205-1	176
REC27-19551	27-19551	201-217
REC27-19552	19552	217
REC27-19552	27-19552	201
REC27-19553	27-19553	201-216
REC27-25725	27-25725	91
REC27-25848	27-25848	148
REC27-25849	27-25849	150
REC27-279361	27-27936-1	150
REC27-31402	27-31402	150
REC27-32438	27-32438	217
REC27-32771	27-32771	217
REC27-385011	27-38501-1	154
REC27-39401	27-39401	148
REC27-39402	27-39402	156
REC27-396231	27-39623	216
REC27-39625	27-39625	216
REC27-39626	27-39626	216
REC27-41245-1	27-41245-1	138-144
REC27-41246-1	27-41246-1	138-144
REC27-41499A87	27-41499A87	139-142-143
REC27-41670006	27-41670-3	146
REC27-418786T	27-18786T	138-144
REC27-42364A92	27-42364A92	139-142
REC27-426311	27-42631-1	203-217
REC27-43004009	27-43004-1	155
REC27-43004A99	27-43004A86	122-123
REC27-43004A99	27-43004A90	121-140
REC27-43004A99	27-43004A99	121-140
REC27-43004A99		143-144
REC27-430057	27-430057	149
REC27-430068	27-43006-8	177
REC27-430075	27-43007-3	147
REC27-430086	27-43008	155
REC27-430331	27-43033-1	194-197-205-216
REC27-430472	27-43047-2	194-216
REC27-433374	27-43337-4	154
REC27-437772	27-43777-2	152
REC27-437792	27-43779-2	153
REC27-43779A87	27-43779A87	140-143
REC27-46351	27-46351	91
REC27-47190	27-47190	91
REC27-481641	27-48164-1	151
REC27-48801	27-48801	156
REC27-552791	27-55279-1	151
REC27-62107	27-62107	151
REC27-62386001	27-62386	148-176
REC27-628601	27-62860-1	147
REC27-657443	27-65744-2	152
REC27-66847	27-66847	154-177
REC27-672751	27-67275-1	152
REC27-677511	27-67751-1	149
REC27-692381	27-69238-1	155
REC27-695242	27-69524-2	154
REC27-695252	27-69525-2	154
REC27-703351	27-70335-1	155
REC27-72486A32	27-72486A32	140-143
REC27-733771	27-733771	151
REC27-73645A87	27-73645A87	140-143-144
REC27-75786	27-75786	155
REC27-757911	27-75791	150

REF.	R.O. /OEM	PAG
REC27-75909	27-75909	147
REC27-76636	27-76636	149
REC27-76952	27-76952	151
REC27-78028A78	27-78028A78	139-143
REC27-782461	27-78246	155
REC27-78409	27-78409	155
REC27-78410	27-78410	152
REC27-78411	27-78411	155
REC27-78690002	27-78690	149-176
REC27-78690002	27-78690002	176
REC27-79583-1	27-79583-1	138-144
REC27-79583A81	27-79583A81	141-144
REC27-796501	27-79650-1	147
REC27-803508	27-803508	136-142
REC27-8127755	27-812775-5	155
REC27-812775A01	27-812775-4	155
REC27-8128671	27-812867-1	177
REC27-8128672	27-8128672	177
REC27-812867A97	27-812867A97	120-140
REC27-812868	27-812868	150
REC27-812869	27-812869	151
REC27-8141951	27-814195-1	152
REC27-814754A00	27-814754A00	141-144
REC27-815791A92	27-815791A92	141-144
REC27-8172771	27-43034-1	217
REC27-8172771	27-817277-1	194-197-205
REC27-821370	27-812370	151
REC27-822189	27-822189	191-193-216
REC27-822217	27-822217	191-216
REC27-822420A94	27-822420A94	139
REC27-822844T04	27-822844T04	137-144
REC27-8231422	27-78069	147
REC27-825032	27-825032	136-142
REC27-827284	27-827284	177
REC27-828553A97	27-828553A97	139
REC27-832934A00	27-832934A00	141
REC27-83940	27-83940M	176
REC27-850283	27-850283	152
REC27-85087	27-85087	216
REC27-85487	27-85487	153
REC27-854913	27-85491-2	149
REC27-85491A90	27-85491A90	139-143
REC27-854924	27-85492-2	154
REC27-856081	27-85608-1	203-217
REC27-85653A87	27-85653A87	140-144
REC27-856704	27-85610-1	217
REC27-856729	27-85490-2	152
REC27-856730	27-85653-1	155
REC27-858524	27-858524	202-217
REC27-877361	27-87736-1	152
REC27-880729	27-880729	197
REC27-883213	27-883213	163
REC27-883252	27-883252	163
REC27-883775	27-813859	151
REC27-88449	27-88449	153
REC27-88449A32	27-88449A32	140-143
REC27-884511	27-88451-1	147
REC27-889319	27-889319	163
REC27-892211	27-89221-1	151
REC27-89221A88	27-89221A88	141-144
REC27-89937	27-89937	146
REC27-8M4502052	27-19701	193
REC27-8M4502052	27-8M4502052	217
REC27-904301	27-90430-1	151
REC27-904841	27-90484-1	155
REC27-90484A88	27-90484A88	141-144
REC27-935361	27-93536-1	149
REC27-96278	27-96278	153
REC27-96542-1	27-96281T01	137
REC27-96542-1	27-96542-1	137
REC27-96542-1		144
REC27-967611	27-96761-1	152
REC27-987691	27-98769-1	150
REC27-991734	27-99173-2	155
REC27-991764	27-99176-3	147
REC27-991772	27-99177-2	147
REC27-993163	27-993163	152
REC27-993261	27-99326-1	189-216
REC27-997761	27-99776-1	147
REC2704-821896A4	2704-821896A4	125
REC2704-821896A4	821896A 4	123
REC2704-821896A4		129-130
REC2704-826191T4K	2704-826191A4	125-129
REC2704-826191T4K	2704-826191T4	129-130
REC2704-826191T4K	826191T 4	121-123-127
REC2720-881054T10K	2720-881054T10	130
REC2720-881054T10K	2720-881054T3	126

REF.	R.O. /OEM	PAG
REC2720-881055T10K	2720-881055T10	130
REC2720-881055T10K	2720-881055T3	126
REC28-30281	28-30281	201-203
REC28-42376A2	28-42376A2	187-231
REC28-8M0032831	28-19699	231
REC28-8M0032831	28-8M0032831	193
REC28-8M0032833	28-43037	194-197-205-231
REC28-8M0032838	28-85119	231
REC28-8M0032838	28-8M0032838	189-191
REC29-47270	47270	120
REC29-47270	29-47270	125-127
REC29-47270		129-130-131
REC29-67483	29-67483	126-127
REC29-71422-1	29-71422-1	127-131
REC29-818391001	818391	121
REC29-818391001	818391001	123-127
REC29-818391001	29-818391	125-127
REC29-818391001		129-130-131-132
REC29-822553	29-822553	126-127-130
REC29-88258	29-88258	122-125-127
REC29-88258	29-88258001	126
REC29-88258		129-130-131-132
REC30-16049	30-16049	111-114-132-133
REC30-160494	30-160494	117-132
REC30-16049T01	30-16049T01	117
REC30-20839T	30-20839T	191-193-201
REC30-62567T	30-62567T	132-134
REC30-63326T		133
REC30-64424T	30-64424	132
REC30-64424T	30-64424T	132
REC30-64424T		134
REC30-67923T	30-67923	132
REC30-67923T	30-67923T	132
REC30-67923T		134-135
REC30-88957T	30-88957T	203-205
REC30-95347	30-95347	183
REC300-01852		85-86-87
REC300-01852	332-5524, A1	84
REC300-01852	332-7778, A1, A3, A5, A6, A9, A12, A14	84
REC300-03107	332-5772A1	84
REC300-03107	332-5772A2	84
REC300-03107	332-5772A3	84
REC300-03107	332-5772A5	84
REC300-03107	332-5772A7	84
REC300-03107		85-86
REC300-08309	339-7370A13	88
REC300-08310	339-85699A1	89
REC301877	25-85594	189-191
REC301877	26-99325	189
REC302588	25-26722	201
REC303347	25-26802	199
REC308627	25-20826	132
REC309-01005-2	27-95299001	137
REC309731	25-29439	199
REC31-12576	31-12576	195
REC31-12578T	31-12578T	195
REC31-16052	31-16052	111-117-126-129
REC31-16756A4	31-16756A4	127-134-135
REC31-16756A6	31-16756A6	132-130
REC31-17514A2	17514A 1	120
REC31-17514A2	31-17514A1, A2	127
REC31-17514A2	8M0045428	127
REC31-17514A2		129-131
REC31-21700	31-21700	191-193-201
REC31-21739	31-21739	189-193-201
REC31-30894A1	31-30894A1	195-203-205-206-207-208
REC31-30895T	31-30895	195
REC31-30895T	31-30895T	203-205
REC31-32898T	31-32898T	203
REC31-35928T1	31-35928A1/T1	205-207-208
REC31-36387A1	31-36387A1	203-205
REC31-38356A1	31-38356A1	201-206
REC31-41326	31-41326	189-191
REC31-42677A1	31-42677A1	195
REC31-43012A1	31-43012A1	122-126
REC31-43012A1	31-43012A2	126
REC31-43012A1	43012A 1	121-123
REC31-43012A1		129-130-131-132
REC31-43013T3	31-43012T3	127
REC31-43013T3	31-43013T3	122
REC31-43013T3	43013T 3	121-123-134

REF.	R.O. /OEM	PAG
REC31-53079A1	31-63079A1	203
REC31-62091T	31-6291T	201
REC31-62596A1	31-62596A1	127-129-130-131
REC31-66668A1	31-99328A1	189-191-206
REC31-74248T	31-74248T	127-134-135
REC31-77420A1	31-77420A1	193-201
REC31-78172A1	31-78172A1	203-207-208
REC31-8036752	31-803675 2	127
REC31-8036752	31-8036752	114
REC31-8036752		129
REC31-812768	31-812768	193
REC31-812873A1	31-812873A1	132-134
REC31-813048	31-813048	111-127-129
REC31-8130482	31-813048 2	127
REC31-8130482	31-8130482	117
REC31-8130482		129
REC31-816773A2	31-816773A1	132-135
REC31-821321A1	31-821321A1	187-191
REC31-828439A2	31-828439A2	205-208
REC31-855553	31-855553	120
REC31-879877A1	31-879877A1	127-129-131
REC31-884323T01	31-884323T01	197
REC31-884325T01	31-884325T01	197
REC31-884330T01	31-884330T01	197
REC31-98294A1	31-98294A1	189
REC310414	25-47254	132
REC310414	25-97386	195
REC310414		134
REC310584	25-35276	189
REC313339	11-55910	191-193-201-208
REC32-88005	32-88005	79
REC32-88006	32-88006	79
REC320961	26-56788	145
REC324351	32435	203-215-223-224-225
REC327031	26-30900	199
REC327674	27-327674	154
REC32768	32768	201
REC32768	54705	215
REC32768		222-223
REC3303-812648T		156
REC3303-8231752		156
REC331886	22-9964-1	178
REC332-2986A27	332-2986A21	84
REC332-2986A27	332-2986A22	84
REC332-2986A27	332-2986A25	84
REC332-2986A27	332-2986A27	84
REC332-2986A27		86-87
REC332-4911A8	332-4911A2-3-5-8	84
REC332-4911A8	338-4733A2	84
REC332-4911A8		85
REC335523	25-88955	132-135
REC339-6120A1	339-5212A1	81
REC339-6120A1	339-5313A1	81
REC339-6120A1	339-5589A1	81
REC339-6120A1	339-5590A1	81
REC339-6120A1	339-6119A1	81
REC339-6120A1	339-6120A1	81
REC339-6120A1		85
REC339-6222A10	332-5524A1-2	83
REC339-6222A10	339-5287	83
REC339-6222A10	339-6222A1-4-6-8-10	83
REC339-6222A10	339-778A1-3-5-6-9-12	83
REC339-6222A10		85
REC339-7452A19	339-7452A1, A2, A3, A7, A8, A9, A10, A11, A14, A15, A21	84-85
REC339-825101T	339-825101T	88
REC339-880615T01	339-880615T01	88
REC339-8M0077471	339-879984A01	88
REC339-8M0077471	339-879984T00	88
REC339-8M0077471	339-879984T01	88
REC339-8M0077471	339-8M0077471	88
REC339-8M0077473	339-883778A01	88
REC339-8M0077473	339-883778A02	88
REC339-8M0077473	339-8M0077473	88
REC345-00042-0	345-00042-0	117-120-129
REC346-01005-0	27-8129391	137
REC35-18458Q4	35-18458Q4	66
REC35-802893Q		66
REC35-802893Q01		66
REC35-80365M	646-24251-02	67-233-234
REC35-822626Q03	35-822626Q03	68-101
REC35-822626Q03	35-822626Q1	68
REC35-822626Q03		233-234-237
REC35-822626Q04	35-822626Q04	68-107
REC35-822626Q04	35-822626Q2	68
REC35-822626Q04		234-235-236-237
REC35-822626Q15	35-822626Q15	68
REC35-822626Q15	35-822626T7	68
REC35-853333T	35-853333T	68
REC35-877565T	35-877565T1	68-234-235-236-237
REC35-877761Q01	35-877761K01	68
REC35-877761Q01	35-877761Q01	68
REC35-877761Q01		237
REC35-87946Q04	35-87946Q04	67
REC35-87946Q04	35-87946Q3	67
REC35-879885T	35-879885T	67-234-235-236-237
REC35-883701K01	35-877769Q01	68
REC35-883701K01	35-883701K01	68
REC35-883701K01		237
REC35-896247	35-896247	68-237
REC35-896546T	35-877767K01	68
REC35-896546T	35-877767Q01	68
REC35-896546T	35-896546T	68
REC35-896546T		237
REC35-8M0122423	35-8M0020349	68
REC35-8M0122423	8M0060041	68
REC35-8M0122423	8M0122423	68
REC350-01005-0	27-803663	137
REC350038	12-92721	197-203-205-232
REC351-01005-0	27-803663018	137
REC377139	30-63742	132
REC377139	30-63742T	132
REC377139	63742T	120
REC377139		134
REC37721001	37721	201
REC378252	31-67445	127
REC382343	31-54928-1	203
REC3852045	25-62704	199
REC3852866	25-31986	201
REC3852928	25-26855	191
REC387247	30-30956	205
REC387247	31-30956	195
REC387247	31-30956T	203
REC387817	31-42647A1	197-203-205
REC39-16054A5	39-16054A5	117
REC39-16054A5	39-16054A5	129
REC39-18653A12	39-18563A12	129
REC39-18653A12	39-18653A12	125
REC39-19721A6	39-19721A6	125-129
REC39-803678A1	39-803678A1	117-129
REC39-803678A3	39-803678A3	114-129
REC39-813011A12	39-813011A12	126-127-130
REC39-817096A6	39-817096A6	125-129-130
REC39-821695A4	39-821695A4	125-129
REC39-822321A2	39-822321A12	126
REC39-822321A2	39-822321A2	125
REC39-822321A2	822321A 2	123
REC39-822321A2		129-130
REC39-831255A6	831255A 6	120
REC39-93481A12	39-93481A12	127-130
REC394-1100A3	394-1100A3	91
REC394-1130A1	394-1130A1	91
REC39580		215
REC398-173	398-173	88
REC398-174	398-174	91
REC398-2202	398-2202	91
REC398-5454A17	398-5454A2, A5, A6, A7, A8, A9, A17, A18, A55	81-86-87
REC398-5454A35	398-5454A11-A15-A16-A30-A31-A32-A34-A35-A36-A61-	81-87
REC398-5704A7	398-5704A2-A4-A5-A7	82-85-86
REC398-693	398-693	91
REC398-832074A4	398-818535A17-18	81
REC398-832074A4	398-9710A11-12-14-15-22-23-25-28-30-31-33-34-36-38-39-43-45-46-47-48-49	81
REC398-832074A4	398-9873A9-17-19-24-25-28-29-32-33-35-38-39	81
REC398-832074A4	F747095	81
REC398-832074A4		85-86
REC398-852386T8	398-852386A4	81
REC398-852386T8	398-852386T8	81
REC398-852386T8		85
REC398-852387T9	398-852387A4	81
REC398-852387T9	398-852387T9	81
REC398-852387T9		85
REC398-8778A29	398-818535A3-5-8-9-10-13-14-15	82
REC398-8778A29	398-8778A10-16-17-18-21-22-23-24-25-26-27-28-29	82
REC398-8778A29	F749095	82
REC398-8778A29		86
REC398-9610A18	398-9610A18	82
REC398-9610A19	398-9610A3-A5-A6-A9-A14-A19-A22-A24-A33	82-86-87
REC3B2-01005-0	27-803663021	137
REC3B2-65021-1	CEF500344	218
REC3C8-01005-4	27-81293910	137
REC3C8-01005-4	27-8M0062091	137
REC3G2-06060-2	803706A3	84
REC3G2-06060-2	8M0047313	84
REC3G2-06060-2	8M0071855	84
REC3V1-87121-0	27-835427A04	97
REC3V1-87121-0	27-835427A04	138
REC3V1-87121-0		142
REC40135		67
REC40145		67-235-236
REC40155		67-235-236
REC40165		67
REC40470	1395-9262-1	158
REC40480	1395-5109-1	158
REC40970		91
REC40990		91
REC41-16056	41-16056	111
REC41-16056	41-80368003	120
REC41-803680002	41-803680002	117
REC41-803680003	41-803680003	117
REC41-8036801	41-8036801	114-129
REC41-825713002	41-825713002	117
REC414172	27-41417-2	150
REC414181	27-41418-1	150
REC414758	27-41475-8	153
REC414991	27-414991	153
REC42039	42039	187
REC42200	42200	187-214-218-220-221
REC42375	42375	187
REC42461A1	42461A1	195
REC42909A3	42909A3	166-170-171
REC42943A1	42943A 1	121-123
REC42943A1	42943A1	122-127
REC43-16138	43-16138	183
REC43-44104T2	43-44104T2	206-207-208
REC43-803498T1	43-803498T1	191-206
REC43-803499T1	43-803499T1	193-206
REC43-812944	812944	183
REC43-8129451	812945 1	183
REC43-822163T1	43-822163T1	191
REC43-822163T1	43-8822163T1	206
REC43-822163T1		206
REC43-828073A1	43-828073A1	205-206-208
REC43-859321A3	43-859321A3	203-205-206-207-208
REC43-878087A2	43-878087A2	206
REC43023	43023	193-195-232
REC43023-2	43023-2	195-232
REC43046	43046	195
REC43055A4	43055A4	194-211-219-222-223-224
REC43242-3	43242-3	161
REC43242-5	86210	161
REC43242-5	43242-5	161
REC43242-5	43242-7	161
REC43242-6	43242-6	161
REC43242-9	43242-9	161
REC434391	43567T1	203
REC44-12238T	44-12238T	195-210
REC44-195133	19513 3	183
REC44-824110	44-824110	205-210
REC44-850308	44-850308	195-210
REC44-94148	44-94148	203-210
REC45-161351	45-16135 1	183
REC45-854808A1	45-854808A1	195
REC45-858765T1	45-858765T1	195
REC45-859105A1	45-859105A1	195
REC45-875222A1	45-875222A1	195
REC45-878575T1	45-878575T1	195
REC45-8M0076368	45-16136 1	183
REC46-42040T5	46-42040A5	211
REC46-42040T5	46-42040T5	187
REC46-42040T5		218-220-221
REC46-42089A2	46-42089A2	187-213-218-220-221
REC46-42089A5	46-42089A5	187

REF.	R.O. /OEM	PAG
REC46-42089A5	46-42089A5	212-218-220-221
REC46-60366T1	46-60366Q1	212
REC46-60366T1	46-60366T1	212
REC46-60366T1		222-223
REC46-60367A1	46-60367A1	212
REC46-60367A1	46-96148A8	212
REC46-60367A1		223-224-225
REC46-70941A3	46-70941A3	199-211-220-221
REC46-70941T01	46-70941A1	199-215-220-221
REC46-73640A1	46-73640A1	215-222-223
REC46-73640A2	46-73640A2	212-222-223
REC46-77177A1	46-77177A1	201-215-222-223
REC46-77177A3	46-77177A3	200-212-222-223
REC46-77822A1	46-77822A1	201-213-222-223
REC46-812966A11	46-812966A11	192-213-222
REC46-812966A12	46-812966A12	192-211-219
REC46-812966A7	46-812966A7	193-215-219-222
REC46-821307A2	46-821307A2	191-215-218-219-222
REC46-8M0077147	46-42579A3	203-215-224-225
REC46-96146A6	46-96146A6	215-221-225
REC46-96148A8	46-96148A8	202-213
REC46-96148T1	46-96148T1	202-213-223-224-225
REC46-99157A02	46-99157A02	189-213
REC46-99157T2	46-99157T2	188-211-218-221-222
REC46895	46895	199-214-220-221
REC47-161543	47-16154 3	183
REC47-161543	CEF500377	218
REC47-161543		233
REC47-19453QZ	47-19453Q2	212-222
REC47-19453T	47-19453T	193
REC47-19453T	CEF500378	218
REC47-19453T		219-222-235-236-237
REC47-20813		217
REC47-22748	CEF500309	217
REC47-22748		220-225
REC47-420382	47-42038-2	187
REC47-420382	CEF500318	218
REC47-420382		218-220-221-233-234
REC47-42038Q3	47-42038Q3	187
REC47-42038Q3	47-42038T4	212
REC47-42038Q3		218-220-221
REC47-43026Q02	47-43026T2	194-197-205
REC47-43026Q02	CEF500301	218
REC47-43026Q02		219-222-223-224-225-234-235-236-237
REC47-43026Q06	47-43026Q06	194-196-204
REC47-43026Q06	47-43026T11, T8	212
REC47-43026Q06		219-222-223-224-225
REC47-803630T		217
REC47-8508910	47-85089-10	189
REC47-8508910	47-85089-3	191
REC47-8508910	CEF500315	218
REC47-8508910		218-219-221-222-233-235-235-236
REC47-85089Q4	47-85089Q4	188
REC47-85089Q4	47-85089T7	211
REC47-85089Q4		221-222
REC47-89980	47-89980	199
REC47-89980	CEF500314	217
REC47-89980		220-221
REC47-89980T1	47-89980T1	199-212-220-221
REC47-89981	47-89981	199
REC47-89981	CEF500310	217
REC47-89981		220-221
REC47-89981Q1	47-89981Q1	199
REC47-89981Q1	47-89981T2	211
REC47-89981Q1		220-221
REC47-89982	CEF500311G	217-221
REC47-89982T1	47-89982T1	211-221
REC47-89983Q1	47-89983Q1	200
REC47-89983Q1	47-89983T2	211
REC47-89983Q1		222-223
REC47-89983T	47-89983T	201
REC47-89983T	CEF500312	217
REC47-89983T		219-222-223-224-225
REC47-89984Q5	47-89984Q5	202
REC47-89984Q5	47-89984T6	212
REC47-89984Q5		223-224-225
REC47-89984T4	47-89984T4	202
REC47-89984T4	CEF500313G	217
REC47-89984T4		223-224-225
REC48752T	48752	214
REC48752T	48752T	202
REC48752T		223-224-225
REC48753	48753	201-214-222-223
REC493-827616T1	827616T 1	121-123-127
REC5007190	31-88269T	127
REC52-42389	52-42389	187
REC52-822539T	52-822539T	195-203-208-209
REC52-850048T	52-850048T	193-195-208-209
REC52-853594T	52-853594T	203-205-208-210
REC52-859340T	52-859340T	203-205-208-209-210
REC53-16057	53-16057	111-114-117-120-129
REC53-29641	53-29641	193-195-201-203
REC53-880719	53-880719	197
REC53-8M0051043	53-8M0051043	197
REC54-8M0064024	823548	191
REC54293A10	54293A10	78
REC55278A4	55278A4	165-169
REC55278A5	55278A5	165-170
REC553126	25-31305	132
REC56678A1	56678A1	166-169-170
REC57-828507Q01	57-828507 1	69
REC57-880566Q14	57-880566Q14	69-237
REC61T-45113-A0	27-84775	146
REC626-14390-90	80447M	160
REC629-803674	629-803674	117-127-129
REC629-8036741	629-8036741	114-127-129
REC629-813047T01	629-813047T01	117-127-129
REC629-880855	629-880855	120-127
REC638-9002A6	838-9002A6	122-127
REC63P-13907-03	880889T	162
REC63P-13907-03	880889T01	162
REC63P-13907-03		163
REC640-9612A7	9612A 6	120-127-129
REC644-818141A2		130
REC646-14623-A1	27-80355	153
REC646-44352-01		225
REC646-818845T6	818846T 6	121-123-127-129-130
REC647-11610-00	39-80422M	116
REC647-11610-10	39-80423M	116
REC647-11610-20	39-80424M	116
REC647-14323-00	10-80573M	160
REC647-14385-00	80450M	160
REC647-14386-10	17-80451M	161
REC647-822373A09		130
REC648-14385-00	80591M	160
REC648-24411-00	80606M	165
REC648-24434-01	27-80613M	165
REC648-24435-02	27-80614M	165
REC648771	64877-1	178
REC650-11370-00	21-80727M	112-116-118
REC655-12414-A1	27-81031M	176
REC65848	65848	178
REC65L-24563-00	35-888289T2	67
REC65W-W0001-00	27-830270A98	106-138-142
REC662-44352-01	CEF500321	217-225-226
REC663-11193-00	27-81254M	152
REC663-11634-00	53-81264M	119-129
REC663-12414-00	27-81266M	177
REC663-14548-00	17-81278M	161
REC663-24411-00	84141M	165
REC663-41114-00	27-81331M	149
REC663-44322-00		226
REC663-45123-00	27-81440M	154
REC663-85540-15	3030T/M	84
REC664-41114-A0	27-81570M	148
REC664-41134-A0	27-826991M	154
REC664-45631-00	52-81644T	208
REC664-81970-62	810937M	80
REC664-81970-62	810937T	80
REC664-81970-62	8M0091976	80
REC66K-13915-00	808504	68
REC66K-13915-00	808504T1	68
REC66M-W0001-01	27-835427A00	100-142
REC66M-W0093-01	802706A1	156-159-167-168
REC66N-11603-00		124
REC676-14186-00	17-92639M	161
REC676-14966-00	22-83369M	160
REC676-41112-A0	27-83338M	149
REC676-41133-A0	27-83383M	154
REC676-45114-A1	27-19175	153
REC676-45127-00	83384M	154
REC676-45128-00	83386M	154
REC677-11181-A0	27-95595M	116-137
REC677-11412-02		116
REC677-11422-02		116
REC677-11432-02		116
REC677-11442-02		116
REC677-11631-00K	761-8224M	116
REC677-11635-00K	761-8225M	116
REC677-11636-00K	761-8226M	116
REC677-14343-68	95495M	160
REC677-24411-02	84262M	164
REC677-24435-01	27-84264	165
REC677-24471-01	84265M	164
REC677-26301-02	95405M	161
REC677-41112-A0	27-95597M	116
REC677-W0093-00	84473M	157-159
REC67C-11181-01	27-834777	110-136-142
REC67C-11351-00	892319001	146
REC67C-11351-00	27-825231	110
REC67C-11351-00	27-859352	146
REC67C-11351-00		142
REC67C-11356-00	25-854341	110-145
REC67C-11603-00		109-124
REC67C-41114-00	27-8347751	110
REC67C-W0001-01	27-825231A99	110
REC67C-W0001-01	825231A02	138
REC67C-W0001-01		142
REC67F-11181-03	27-8041151	136-142
REC67F-12411-01	855676004	174-175
REC67F-81960-12	804278T	80
REC67F-81960-12	804278T1	80
REC67F-81960-12	804278T11	80
REC67F-W0093-00	804346T01	157
REC67F-W0093-00	804346T02	157
REC67F-W0093-00	804346T1	157
REC67F-W0093-00		159-170-171
REC67H-13907-00	809088T01	162
REC67H-13907-00	809088T1	162
REC67H-13907-00		164
REC681001	68100-1	203-205
REC682-11351-A0	27-96602M	146
REC682-11610-01	39-15320M	129
REC682-12414-A1	27-83940M	176
REC682-41114-00	27-83951M	148
REC682-41133-A0	27-83955M	153
REC682-44352-01	CEF500320	217-226
REC682-45113-A0	27-96618	153
REC682-45631-00	52-84274M	208
REC682-W0078-A1		226
REC688-14548-00	17-97730M	161
REC688-45123-00	27-81440M	154
REC688-82575-01	87-97682M	90
REC689-11181-00	27-19138M	137
REC689-11610-00	39-14235M	129
REC689-11631-00K	761-8484M	129
REC689-11651-00		129
REC689-41112-A0	27-96656M	149
REC689-41114-A0	27-84741M	149
REC689-44352-02	CEF500326	217-226
REC689-W0078-04		226
REC689-W0078-A6		226
REC689-W0093-02	84456M	157-159
REC689-W4432-01		226
REC68V-11351-00	27-8587321	142-146
REC68V-14984-00	27-81325	163
REC68V-24410-00	880890T1	162
REC68V-24563-00	881540	67-237
REC692-24410-00	43113M	161
REC692-24410-00	43113T	161
REC695-85540-11	430775/M	83
REC696-45113-00	27-16717M	147
REC696-85540-12	41305M	83
REC696-W0093-00	84419M	157-159
REC697-45114-00	27-98952M	153
REC697-85570-00	97077M	88
REC69J-11181-03	27-887848	136-142-144
REC69J-11182-03	27-887848-1	137-142
REC69J-11351-11	27-887810011	142-146
REC69J-13907-03	888246T	162
REC69J-13907-03	888246T01	162
REC69J-13907-03		163
REC69J-24410-02	888251T	163
REC69J-24410-02	888251T02	162
REC69J-24410-02		163
REC6A0-14325-00	10-41889M	160
REC6A0-82550-01	87-93102M	90
REC6A1-W0093-01	92520M	157-159

REF.	R.O. /OEM	PAG
REC6C5-13915-00	35-881323001	67
REC6E0-11193-A1	27-99991M	112
REC6E0-11631-00-98K	761-8256M	113-127
REC6E0-11651-01	629-9492M	113-116-127
REC6E0-24411-00	91753M	164
REC6E0-24434-00	27-91754M	165
REC6E0-24435-00	91746M	165
REC6E0-24471-00	91748M	164
REC6E0-26301-01	11921M	161
REC6E0-41112-A1	27-99995M	112-148
REC6E0-41114-A1	21-41279M	148
REC6E0-41114-A1	27-99993M	112
REC6E0-41114-A1	99993M	148
REC6E0-44352-00	CEF500325	217-225
REC6E0-45113-A1	27-91780	113
REC6E0-45113-A1	27-91780M	146
REC6E5-12411-02	11919M	115-174
REC6E5-12411-02	83282M	112
REC6E5-12411-02		175
REC6E5-14386-01	17-11794M	161
REC6E5-45631-00	52-96313M	208
REC6E7-11631-00K	761-7982M-T	129
REC6E7-11181-00	27-18937M	137
REC6E7-14385-00	14180M	160
REC6E7-85570-19	95188T	87
REC6E7-W0093-01	814481M	157-159
REC6E8-14390-12	14216M	159
REC6E9-11193-A0	27-97704M	152
REC6E9-12414-A1	27-814555M	177
REC6E9-12414-A1	27-83336M	176
REC6E9-12414-A1	27-97706M	118
REC6E9-41114-A0	27-827176M	149
REC6E9-82575-02	87-97757M	90
REC6E9-W0093-02	17068M	156-159
REC6E9-W0093-03	97667M	157-159
REC6F5-11181-A2	27-11745M	118
REC6F5-11412-11	851997M	119
REC6F5-11422-11	827142M	119
REC6F5-11432-11	827143M	119
REC6F5-11442-11	827144M	119
REC6F5-11515-00	13301M	119
REC6F5-11610-00	39-11768T	119
REC6F5-11610-10	39-11769M	119
REC6F5-11610-20	39-11770T	119
REC6F5-11633-00	41-11771T	119
REC6F5-11651-00	629-9486T	119
REC6F5-11681-00	17-13302T	119
REC6F5-12411-03	75692	174
REC6F5-12411-03	814554T01	118-174-175
REC6F5-41112-A0	27-11754	118
REC6F5-41114-A0	27-11756	118
REC6F5-45113-A0	27-11885	147
REC6F5-85540-22	11737T	84
REC6F6-11193-A1	27-11749M	118
REC6F6-11631-00K	761-9329T	119
REC6F6-11636-00K	761-9331T	119
REC6F6-W0093-00	611810M	156-159
REC6G1-11193-A1	27-11454M	115-148
REC6G1-11610-00	39-11462M	113
REC6G1-11633-00	41-95601M	113-116
REC6G1-11681-00	17-14193M	113-115-116
REC6G1-14546-00	11490M	159
REC6G1-14985-00	11489M	160
REC6G1-24411-00	11499M	164
REC6G1-24431-01	27-11500M	165
REC6G1-24471-00	11497M	164
REC6G1-41112-A1	27-11456M	115-148
REC6G1-41114-A0	27-11456M	115
REC6G1-41133-A0	27-11568M	153
REC6G1-44352-00	CEF500302	217-225-226
REC6G1-45113-A1	11560M	146
REC6G1-45113-A1	27-11560M	115
REC6G1-W0093-00	11502M	156-157-159
REC6G8-11181-A1	27-8254821	96-136-142
REC6G8-11351-A0	27-825847	96-142-146
REC6G8-12414-A0	27-825701	96
REC6G8-13440-00	825467T02/A1	68
REC6G8-41112-02	27-825693	96
REC6G8-W0001-A3	27-825847A95	96-138-142
REC6G9-85540-29	825667	83
REC6G9-85540-29	825667T	83
REC6H1-W0093-01-00	84475M	156-159
REC6H3-14590-00	17050M	159
REC6H3-44352-00	CEF500316	217-226
REC6J1-11610-00	39-14197M	113
REC6L5-44352-00	CEF500322	217
REC6P2-W0001-01	27-887810A04	138-142
REC705-850026T1K	705-850026A3	125
REC705-850026T1K	850026T 1	120

REF.	R.O. /OEM	PAG
REC705-850026T1K		127
REC705-850026T3	705-850026A3	129
REC70977T	70977	199-214-220-221
REC73345A1	73345A1	191-193-201-210-232
REC75692A6	75692A6	175-176
REC75692A7	75692A7	175
REC75692Q2	75692Q2	175-176
REC76039-4	76039-4	193-195-201
REC764337	26-41953	134-135-145
REC765-7441T32	765-7441T32	126-127
REC765-7441T36	765-7441T36	126-127
REC765-7442T32	765-7442T32	126-127
REC765-7442T36	765-7442T36	126-127
REC765-7445A12	765-7445A12	126-127
REC765-7445T11	765-7445T11	126-127
REC765-7446A11	765-7446A11	126-127
REC765-7446T12	765-7446T12	126-127
REC766-8666741	766-8666T41	126-127
REC766-8667T41	766-8667T41	126-127
REC774-9137A11	774-9137A11	122-125-129-130
REC777-815965A4	777-815965A4	125-127-129-130
REC777-815965A6	39-96170A12	125
REC777-815965A6	777-815965A6	125
REC777-815965A6		129-130
REC777-9009A7	39-96170A12	125
REC777-9009A7	777-9009A7	125
REC777-9009A7		129-130
REC777-9009T13	774-9009A13	122
REC777-9009T13	777-9009T13	125-127-129-130
REC779-803677	779-803677	117-127-129
REC779-803677T02	779-803677002	129
REC779-803677T02	779-803677T02	117
REC779-803677T02		127
REC779-804886	779-804886	114-127-129
REC779-879194T01	779-879194T01	117-127-129
REC779-96152	779-96152	120-127-129
REC779-9615T	779-9615T	111-127-129
REC780-9229A7	780-9229A7	125-129
REC78249	78249	95
REC783-9613A1K	783-9613A1	129
REC783-9613A1K	783-9613T1	125-129
REC783-9613A1K		127
REC783-9613T3	783-9613T3	125-129
REC785-9737T9		127
REC785-9738T9	785-9738T9	126-127
REC803034T	823034T	83-85
REC803061T1	803061T1	175-176
REC803673	803673	117
REC803702	803702T	89
REC803704	803704T	83
REC803844T01	339-803844T01	87
REC804184		170-171
REC807929A1	807929A1	205-215-225
REC809569	809569	160-167-168-169
REC809570-1	809570-1	160-169
REC8107492	810749-2	158-172-173
REC8107493	810749-3	159-172-173
REC812887002	812887-1	178
REC812929-1	812929-1	193
REC813046002	813046002	111
REC8130461	8130461	117
REC813932	27-813932-2	148
REC81554	858452-1	145
REC816597A1	816597A1	231
REC817275A08		219
REC817275A09	817275A09	196-213-219
REC817275A1	817275A1	197-214-225
REC817275A2	817275A2	194-214-219-222-223-224
REC817275A6	817275A6	204-213-225
REC8172761	817276-1	194-197-205-214-219-222-223-224-225
REC818349T1	818349A1	231
REC818349T1	818349T1	205
REC818574	818574	145
REC818763A10	818763A11/T11	205
REC819113	27-819113	151
REC819114	27-819114	151
REC8213161	8213161	191
REC8213542	821354-2	214
REC8213542	821354-2	191-214-218-219-222
REC821354A2	821354A2	190-211-218-219-222
REC821509	821509	78-79
REC821526001	821526	205

REF.	R.O. /OEM	PAG
REC821526001	821526001	197
REC821889A50	821889A9, A22, A29, A34, A38, A40, A42, A46, A50, A51	89
REC8219321	821932-1	187
REC822158	822158	191
REC823033	823033	87
REC8235471	823547-1	191
REC823547A2	823547A2	190-227-228
REC823700	27-823700-2	147
REC824145	824145	205
REC8245191	824519-1	197-203-205
REC825212T02	825212	110
REC825212T02	855676003	174
REC825212T02	855676A1	174
REC825212T02		175-233-234-235-236-237
REC826549	27-826549	147
REC826729A10	99186	79
REC826729A10	826729A/08	79
REC826729A10	826729A4	79
REC826729A10	826729A4/07	79
REC826729A10	99186-1	79
REC826729A10	99186T	79
REC826738	27-826738	154
REC827365	827365	178
REC827509A10	827509A10,T7	89
REC827675A1	827675A1	79
REC827955A2	827955A 2	120
REC827955A2	827955A2	127
REC828507Q4	57-828507Q4	69
REC833072003	833072003	174
REC833072004	833072004	174
REC84-813706A26	84-813706A26	95
REC84-813706A26	84-99215A26	95
REC84-813715A8	84-813715A8	95
REC84-881908T3	84-881908T	95
REC84-881908T4	84-881908T	95
REC847525	27-847525-1	152
REC850055001	850055	174
REC850055001	8500550014	174
REC850055001		175
REC850055A2	850055A2	175
REC850307	850307	195
REC850315A1	850315A1	195
REC85083	85083	189-214-218-221-222
REC85094	85094	189
REC853906A1	853906A1	195
REC853908A1	853908A1	195
REC853960T	853960T	82
REC853960T	855747A1	82
REC853960T		85
REC8542561	854256 1	158-159
REC854445	854445	90
REC854512T	834520T	82
REC854512T	854512T	82
REC854512T	855745A12	82
REC854513T		86
REC854513T	834821T	83
REC854513T	854513T	83
REC854513T	855748A2	83
REC85552001	85552001	189
REC855676002		174
REC855686		66
REC855713A3	339-6222A1-4-6-8-10	83
REC855713A3	855713A3	83
REC856542	27-856542-1	151
REC858498	858498	189
REC858763	858763	64
REC8597721	859772-1	145
REC861155A3	8611552	162
REC861155A3	861155A3	162
REC8612882-1	8612882-1	178
REC86596T	86596T	178
REC86617A20	86617A2-A3-A5-A9-A11-A13-A17-A20	81-85
REC86976	50-856996T	77
REC86976	50-86976	77
REC87-18211	87-18211	78
REC87-823609A17	87-823609A17	90
REC878265A6	811628	79
REC878265A6	878265A6	79
REC880596T55	880596T55	162-163
REC880596T58	880596T58	162-163
REC881346T	881346T	81
REC882751A04	882751A04	78-79
REC882751A1	828151	78

REF.	R.O. /OEM	PAG
REC882751A1	828151A1	78
REC882751A1	882751A1	78
REC882751A1	882751A2	78
REC882751A1		78
REC883072T	817411	81
REC883072T	854515	81
REC883072T	815279A1-2-3	81
REC883072T	815279T-2-4-5	81
REC883072T	81579-1-2-3-4-5	81
REC883072T	830179-2	81
REC883072T	830179A1-2-3	81
REC883072T	830179T	81
REC883072T	854515T1	81
REC883072T	883072T	81
REC883072T		85-86-87
REC883202T02	883202A02	162
REC883202T02	883202T02	162
REC883202T02		163
REC887825	27-887825	149
REC888733T02	888733T02	162
REC888733T02	888733T1	162
REC888733T02		164
REC889246A96	889246A96	193
REC89-818864T	89-818864T	78
REC89-825096T01	89-825096T	77
REC89-825096T01	89-825096T01	77
REC89-825096T01		78
REC89-96054T	89-96054	77
REC89031A1	89031A1	166-170-171-172
REC89031A2	89031A2	166-172-173
REC89031A3	89031A3	166-170-171-172
REC89031A4	89031A4	166-173
REC892318	57-892318	69
REC892318	8M0012623	69
REC892318	8M0026410	69
REC892320	27-892320	154
REC892864T04	892864T04	175
REC893640T01	854515T2	80
REC893640T01	883072T2	80
REC893640T01	893640T01, T1	80
REC893857	859770-1	193
REC893929A01	811618	79
REC893929A01	811618A1	79
REC893929A01	812843A1	79
REC893929A01	813442A1	79
REC893929A01	813442A2	79
REC893929A01	893929A01	79
REC893929A01	99660A1	79
REC895338	895338	174
REC895338	F97068-2	174
REC895338		175
REC89594A1	89594A1	203
REC898101T67	898101T67	162-163
REC899106T01	808505T	162
REC899106T01	827682T	162
REC899106T01	892874T01	162
REC899106T01	899106T01	162
REC899883230	899883230	84
REC899883230	339-7452 A2, A3	84
REC899883230		85
REC8M0000822	828553	147
REC8M0005777	12-858234	193
REC8M0007131	888909A1	197-215-219
REC8M0032834	28-56654	202-231
REC8M0032837	28-56662	231
REC8M0032837	28-8M0032837	231
REC8M0032837	8M0032837	201
REC8M0045278	27-857081	136
REC8M0045278	27-8M0045278	136
REC8M0045278		142
REC8M0047311	160643	88
REC8M0047624	8558432	162
REC8M0047624	8M0047324	162
REC8M0047624		164
REC8M0053823	8M0053823	197
REC8M0067307	885599004	174
REC8M0071855	339-803706A1	88
REC8M0080349	8M0080349	120-129
REC8M0080357	8M0080357	111-117-129
REC8M2011027	79448	197-203-205
REC8M6000359	880596504	161
REC8M6000359	880596522	161
REC8M6000359	880596524	161
REC8M6000359	8M0007943	161
REC8M6000359	8M6000359	161
REC8M6000359		163
REC8M6000623		89

REF.	R.O. /OEM	PAG
REC90095		180
REC90201-12565	12-81816M	116
REC90201-20417	12-81831M	119
REC90209-18112	12-84620M	113-115-116
REC90209-27M07	12-13305M	119
REC90301-ZW1-003	11-52407Q1	195
REC90301-ZW1-003	11-52707	232
REC90301-ZW1-003	11-827614	203
REC90363A1	90363A1	166-173
REC90508-ZW1-003	14-31210	232
REC90508-ZW1-003	14-816629	205
REC90508-ZW1-003	14-816629Q	195-203
REC90794-46866		66
REC90794-46868		66
REC908855	26-20070	145-229
REC91-00001		180
REC91-00002		180
REC91-12037	91-12037	181
REC91-31107T	91-31107T	181
REC91-31229	91-31229	180
REC91-34569A1	91-34569A1	180
REC91-36569T	91-36569T	180
REC91-37241		180
REC91-43506T	91-43506T	181
REC91-56048001	91-56048001	181
REC91-56775T	91-56775T	181
REC91-60523	91-60523	181
REC91-60526T	91-60526T	181
REC91-61067A04	91-61067A04	181
REC91-61069T	91-61069T	181
REC91-61077T	91-61077T	181
REC91-859046Q4	18-4446	180
REC91-859046Q4	89-89206-ZW7-000AH	180
REC91-859046Q4	91-821887T1	180
REC91-859046Q4	91-859046Q4	180
REC93101-10M25	26-95472M	113
REC93101-14M01	26-82165M	116
REC93101-20M29	26-18843M	113-116
REC93101-20M34	23-81841M	115
REC93101-30M33	26-11758M	118
REC93102-20M25	26-14195M	115-116
REC93104-16M01	26-189721	118
REC93210-22M02	25-83348M	118
REC93210-42159	25-82276M	116
REC93210-42159	26-94663M	115
REC93210-42M70	25-95602M	116
REC93210-54M54	25-11451M	115
REC93210-65M50	25-11759M	118
REC93224A1	93224A1	199-213-220-221
REC93306-204U0	30-18859M	113-116
REC93306-204U0	30-82299M	115
REC93306-306V1	30-11767T	119
REC93306-307U0	30-11766T	119
REC93310-112V0	31-91721M	113-115
REC93310-418U0	31-94769M	116
REC93310-418V1		113-115
REC93310-624U5		129
REC93310-727V7	29-13304M	119
REC93332-000UE	31-13300T	119
REC93440-68M03	53-11760M	118-119
REC93450-13022	53-82342M	113-115-116
REC93450-13022	93450-13022	125
REC93450-15023		129
REC93602-14104		129
REC93602-14118	29-82350M	116
REC93602-20M02		129
REC93603-21111	29-82353M	119
REC951853	27-95183-3	153
REC96452A4	770002	82
REC96452A4	73372A1	82
REC96452A4	73410A1	82
REC96452A4	76681A1	82
REC96452A4	96452A1-A4-A5	82
REC96452A4		85-86
REC96455A8	68162A3	82
REC96455A8	68162A6	82
REC96455A8	96455A1	82
REC96455A8	96455A8	82
REC96455A8		85-86
REC96455A9	681621, A5, A8	83
REC96455A9	96455A4, A6, A9	83
REC96455A9		86-87
REC983892	31-812767A1	193-206

REF.	R.O. /OEM	PAG
REC98450A10	98450A1-A3-A5-A10	82-85
REC99021A14	99021A11	82
REC99021A14	99021A14	82
REC99021A16	99021A3, A5, A8, A13, A15, A16	82-86
REC99021A6	99021A2, A6, K2	83-86
RECOBBRACKET		65
RECOBELEMENT		66
RECOBFILTER		66
RECYS-225-15		66
RM15-92881A1	15-92881A1	201
RM27-880552A07	27-880552A07, A06	139-142
RM27-896142A07	27-896142A06, A07	139-142
RM27-8M0024565	27-8M0024565	136-142
RM27-8M0033476	27-895374006	134-135-136-142
RM35-802893Q		66
RM35-8M0082911	35-897575T01	68
RM35-8M0082911	35-897575T02	68
RM35-8M0082911		237
RM39-27841A12	39-2784112	130
RM804540	804540	174-175-233
RM817275A1	817275A1	205
RM855676002	855676002	97-174-175-233-234
RM855676005	855676005	174
RM858732T02		142
RM880640508	880640508	174-175-237
RM881705T1	881705T1	162-164
RM91-31229A7	91-31229A7	180
SIE18-8004	98396A38	64
SIE18-8005	98396A38	64
SIE18-8013		64
SIE18-8015		64
SOL0001-073-06P	48-815083	239
SOL1111-093-07	48-828152A12	239
SOL1111-093-08	48-828154A12	239
SOL1111-093-09	48-828156A12	239
SOL1111-093-10	48-828158A12	239
SOL1111-093-11		239
SOL1211-100-14	48-19642A40	239
SOL1211-101-13	48-19640A40	239
SOL1211-103-12	48-19639A40	239
SOL1211-105-11	48-19638A40	239
SOL1211-110-09	48-19636A10	239
SOL1311-110-15	48-73140A40	239
SOL1311-111-13	48-816704A40	239
SOL1311-111-14	48-816706A40	239
SOL1311-114-12	48-816702A40	239
SOL1311-116-11	48-85632A40	239
SOL1311-121-09	48-87818A11	239
SOL1313-105-13	48-816704A40	239
SOL1313-105-14	48-816706A40	239
SOL1313-108-12	48-816702A40	239
SOL1313-111-11	48-85632A40	239
SOL1313-118-09	48-87818A11	239
SOL1411-130-19	48-77346A45	239
SOL1411-130-21	48-77348A45	239
SOL1411-133-17	48-77344A45	239
SOL1411-135-15	48-77342A45	239
SOL1411-138-13	48-77340A45	239
SOL1411-140-11	48-77338A45	239
SOL1413-125-19	48-77346A45	239
SOL1413-125-21	48-77348A45	239
SOL1413-128-17	48-77344A45	239
SOL1413-130-15	48-77342A45	239
SOL1413-133-13	48-77340A45	239
SOL1431-130-19	48-16990A46	239
SOL1431-130-19	48-77346A45	239
SOL1431-130-21	48-16992A46	239
SOL1431-130-21	48-77348A45	239
SOL1431-133-17	48-16988A46	239
SOL1431-133-17	48-77344A45	239
SOL1431-135-15	48-16986A46	239
SOL1431-135-15	48-77342A45	239
SOL1431-138-13	48-17314A46	239
SOL1431-138-13	48-77340A45	239
SOL1431-140-11	48-17312A46	239
SOL1431-140-11	48-77338A45	239
SOL1511-142-23	48-832834A45	240
SOL1511-143-21	48-832832A45	240
SOL1511-145-19	48-832830A45	240
SOL1511-148-17	48-832828A45	240
SOL1511-150-15	48-78116A45	240
SOL1511-153-19	48-13700A46	240
SOL1511-153-21	48-13702A46	240
SOL1511-155-17	48-18278A46	240
SOL1511-158-15	48-19838A46	240

REF.	R.O. /OEM	PAG
SOL1512-142-23		240
SOL1512-143-21		240
SOL1512-145-19		240
SOL1512-148-17		240
SOL1512-150-15		240
SOL1512-153-19	48-13701A46	240
SOL1512-153-21	48-13703A46	240
SOL1512-155-17	48-90159A46	240
SOL1512-158-15	48-19841A46	240
SOL1513-140-21	48-832832A45	240
SOL1513-140-21	48-834854A45	240
SOL1513-143-19	48-832830A45	240
SOL1513-143-19	48-834852A45	240
SOL1513-145-17	48-832828A45	240
SOL1513-145-17	48-834850A45	240
SOL1513-148-15	48-78116A45	240
SOL1542-150-19	48-13701A46	240
SOL1542-155-15	48-19841A46	240
SOL1571-145-25		240
SOL1571-148-23	48-13704A46	240
SOL1571-150-21	48-13702A46	240
SOL1571-153-19	48-13700A46	240
SOL1571-155-17	48-18278A46	240
SOL1572-148-23	48-13705A46	240
SOL1572-150-21	48-13703A46	240
SOL1572-153-19	48-13701A46	240
SOL1572-155-17	48-90159A46	240
SOL5011-078-07		239
SOL5011-078-08		239
SOL5011-085-07	48-895180A10	239
SOL5011-085-08	48-895182A10	239
SOL5011-085-09		239
SOL5111-093-07		239
SOL5111-093-08		239
SOL5111-093-09		239
SOL5111-093-10		239
SOL5111-093-11		239
SOL5211-099-09		239
SOL5211-099-10		239
SOL5211-099-11		239
SOL5211-099-12		239
SOL5211-099-13		239
SOL9311-110-15		241
SOL9311-111-13		241
SOL9311-111-14		241
SOL9311-114-12		241
SOL9311-116-11		241
SOL9311-120-10		241
SOL9311-121-09		241
SOL9331-110-15		241
SOL9331-111-13		241
SOL9331-111-14		241
SOL9331-114-12		241
SOL9331-116-11		241
SOL9411-132-19		241

REF.	R.O. /OEM	PAG
SOL9411-132-21		241
SOL9411-133-17		241
SOL9411-135-15		241
SOL9411-138-13		241
SOL9411-140-09		241
SOL9411-140-11		241
SOL9431-130-19		241
SOL9431-130-21		241
SOL9431-133-17		241
SOL9431-135-15		241
SOL9431-138-13		241
SOL9432-130-19		241
SOL9432-133-17		241
SOL9432-135-15		241
SOL9432-138-13		241
SOL9511-143-21		241
SOL9511-145-19		241
SOL9511-148-17		241
SOL9511-150-15		241
SOL9511-153-13		241
SOL9511-155-11		241
SOL9511-160-13		241
SOL9512-143-21		241
SOL9512-145-19		241
SOL9512-148-17		241
SOL9512-150-15		241
SOL9531-140-19		241
SOL9531-140-21		241
SOL9531-140-23		241
SOL9531-143-17		241
SOL9531-145-15		241
SOL9532-140-19		241
SOL9532-140-21		241
SOL9532-140-23		241
SOL9532-143-17		241
SOL9532-145-15		241
SOL9571-145-25		241
SOL9571-148-23		241
SOL9571-150-21		241
SOL9571-153-19		241
SOL9571-155-17		241
SOL9571-158-15		241
SOL9572-145-25		241
SOL9572-148-23		241
SOL9572-150-21		241
SOL9572-153-19		241
SOL9572-155-17		241
SOL9572-158-15		241
SOLRBX-102		240
SOLRBX-114		240
SOLRBX-124		240
TEN00800	31640	71
TEN00801	34127	71
TEN00802	94286	71
TEN00803	47820	71

REF.	R.O. /OEM	PAG
TEN00804	46399	71
TEN00805	46396	71
TEN00806	43994	71
TEN00806BIS	821631	71
TEN00807	55989	71
TEN00808	34762	71
TEN00809	85824	71
TEN00810	42121	71
TEN00811	9411	71
TEN00812	98432	72
TEN00812	98432T6	189
TEN00812		233-234
TEN00813	823912-1	72
TEN00814	821629	72
TEN00815	821630	72
TEN00816	818298	72
TEN00817	806189	72
TEN00818	806190	72
TEN00819	806105	72
TEN00820	76214-5	72
TEN00821	89949	72
TEN00822	825271	72
TEN00823	823912	72-183-233-234
TEN00824	823913	72
TEN00825	826134	72
TEN00826	76214	72
TEN00827	17264	73
TEN00827	17264T2	193
TEN00828	806188	73
TEN00829	822157	73
TEN00829AL	822157T2	191
TEN00830	822777	73
TEN00831	826887M	73
TEN00832	80653	73
TEN00833	893404	73
TEN00834	875208	73-233-234
TEN00835	76214-4	73
TEN00836	865182	73
TEN00837	8M0012083	73
TEN00838	847635001	73
TEN00839	853762	73
TEN00840	8239121	73
TEN00841	804043	74
TEN00842	8M0057772	74
TEN00843AL	87915QA65	74
TEN01121	84732M	116
TEN01127	83394M	118
TEN01166	83330M	118
TRI305-0386		64
TRI305-0566		64
WI3179P3		125
WI3182P2		125
WI3183PS	767-879878T5	125-129

ÍNDICE / TABLE OF CONTENTS / INDICE

R.O. / OEM --> REF

R.O. /OEM	REF	PAG
9411	CM09411	70
9411	TEN00811	71
12415	REC12415	90
13171	REC12-31211Q01	232
13171	REC12-835467Q01	232
14480	REC14480	178
14586	REC14586	174-175-235-236-237
16130	PAF8-04040004	185
16130	REC26-16130	183
16131	PAF8-04040002	185
16140	PAF8-04000012	185
16141	PAF8-04000012-1	185
16147	PAF15-06000016	185
16147	REC11-16147Q	183
16150	PAF8-04010000	185
16152	PAF8-04000305	185
16157	REC16157	214
16159	REC16159	183-214
16253	REC16253	156-160-167
16496	REC16496	178
17264	TEN00827	73
19273	REC19273	161
19552	REC27-19552	217
19643	REC19643	232
20843	REC20843	193-201

R.O. /OEM	REF	PAG
31640	TEN00800	71
32435	REC324351	203-215-223-224-225
32768	REC32768	201
34127	TEN00801	71
34762	TEN00808	71
37721	REC37721001	201
42039	REC42039	187
42121	TEN00810	71
42200	REC42200	187-214-218-220-221
42375	REC42375	187
43023	REC43023	193-195-232
43046	REC43046	195
43396	CM43396	69
43396	CM43396A	69
43993	REC26-43993	123
43994	TEN00806	71
46396	TEN00805	71
46399	TEN00804	71
46895	REC46895	199-214-220-221
47270	REC29-47270	120
47820	CM47820	70
47820	TEN00803	71
48752	REC48752T	214
48753	REC48753	201-214-222-223

R.O. /OEM	REF	PAG
54705	REC32768	215
55989	TEN00807	71
62351	PH350-0003	80
65848	REC65848	178
70977	REC70977T	199-214-220-221
75692	REC6F5-12411-03	174
76214	CM76214	70
76214	CM762145A	70
76214	TEN00826	72
78249	REC78249	95
78614	PH350-0003	80
79448	REC8M2011027	197-203-205
80653	TEN00832	73
85083	REC85083	189-214-218-221-222
85094	REC85094	189
85824	TEN00809	71
86210	REC43242-5	161
89026	CM89026	70
89949	TEN00821	72
91012	REC10-91012	120
94286	TEN00802	71
94320	REC10-94320	121-123
95220	PAF4-03000024	185
95348	PAF8-04000101	185
98432	TEN00812	72

R.O. /OEM	REF	PAG
99186	REC826729A10	79
160643	REC8M0047311	88
161586	PAF8-04000006	216
161587	PAF8-04000005	216
480955	PH130-0047	76
490955	PH130-0047	76
770002	REC96452A4	82
803673	REC803673	117
804043	TEN00841	74
804540	RM804540	174-175-233
804903	PAF8-04000013	185
806105	TEN00819	72
806188	TEN00828	73
806189	TEN00817	72
806190	TEN00818	72
808504	REC66K-13915-00	68
809569	REC809569	160-167-168-169
811618	REC893929A01	79
811628	REC878265A6	79
812876	REC12-8M0012298	121
812944	REC43-812944	183
813277	PAF8-04000012-2	185
816770	PH350-0003	80
817411	REC883072T	81
818298	TEN00816	72
818391	REC29-818391001	121
818574	REC818574	145
821509	REC821509	78-79
821526	REC821526001	205
821629	TEN00814	72
821630	TEN00815	72
821631	TEN00806BIS	71
821663	PH300-0019	80
822157	TEN00829	73
822158	REC822158	191
822625	PAF15-07010003	101-107
822649	PAF25-05050001	109
822650	PAF15-07040006	109
822650	PAF15-07050006	105
822777	TEN00830	73
823033	REC823033	87
823548	REC54-8M0064024	191
823683	REC25-823683	121-123
823912	TEN00823	72-183-233-234
823913	TEN00824	72
824051	PH200-T033	79
824145	REC824145	205
825050	PAF25-05050009	109
825212	PAF15-07000031	107
825212	REC825212T02	110
825271	TEN00822	72
825435	CM6G8-11325-00	96
825451	PAF15-07040012	105
825451	PAF15-07040301	105
825490	PAF15-07050004	105-107
825667	REC6G9-85540-29	83
825702	PAGB/T5783-M6X20	105
826134	CM826134	70
826134	CM826134A	70
826134	TEN00825	72
827365	REC827365	178
828151	REC882751A1	78
828506	MES3164M	80
828553	REC8M0000822	147
828708	PH200-T010	79
830274	PAF25-05050008	109
831294	PAF25-05000023	69-109
832990	PAF25-05050002	109
833102	PAF25-05000021	109
833104	PAF25-05050017	109
834954	PAF15-07050001	105
834956	PAF15-07040200	103
835392	PAF15-07000002	103-233-234
850055	REC850055001	174
850307	REC850307	195
850837	PAF15-07050002	105-145
850838	PAF15-07040001	105
850839	PAF15-07040002	105
850842	PAF15-07040015	105
853762	TEN00839	73
854445	REC854445	90
854515	REC883072T	81
855219	PAF25-05060002	150
855678	PAF15-07010008	101-233-234
855691	PAF15-07000024	103
855776	PAF15-07010011	101
855779	PAF15-07010012	101
855837	PAF25-05080004	150

R.O. /OEM	REF	PAG
855959	PAF15-07040004	105
858498	REC858498	189
858763	REC858763	64
865182	TEN00836	73
875208	CM3H6-60218-000	183
875208	TEN00834	73-233-234
878431	PAF25-05060003	150
880134	PAF15-07040011	105
880135	PAF15-07040009	105
880653	CM880653	69-237
880653	CM880653A	69
881540	REC68V-24563-00	67
889955	PH300-0030	80
889956	MES3164M	80
889956	PH300-0031	80
893404	CM892227	69-237
893404	CM892227A	69
893404	TEN00833	73
895119	PAF8-05010015	98
895155	PAF8-04000016	185
895156	PAF8-04000015	185
895338	REC895338	174
8037511	PAF8-04000010	214
8037531	PAF8-04000007	214
8130461	REC8130461	117
8205031	CM820503	71
8213161	REC8213161	191
8239121	CM8239121	70
8239121	TEN00840	73
8250311	PAF15-07010021	101-107-110
8252312	PAF25-00000013	146
8252711	CM825271	69-234-235-236
8252711	CM825271A	69
8525601	PAF25-05010106	107
8556692	PAF25-05000007	107
8558432	REC8M0047624	162
8611552	REC861155A3	162
8830591	PAF15-07010006	96
16066004	REC16066004	90
85552001	REC85552001	189
803512001	PAF8-00000200	97
803738004	PAF8-04020001S	185
803738005	PAF8-04020001L	185
803743002	PAF8-04000019	185
803744002	PAF8-04000301	185
803755004	PAF8-02000006S	185
803755005	PAF8-02000006L	185
803775006	PAF8-00000002	95
804899002	PAF8-02000007	185
813046002	REC813046002	111
818391001	REC29-818391001	123-127
821526001	REC821526001	197
822650001	PAF8-05030006	98
833072003	REC833072003	174
833072004	REC833072004	174
834952002	PAF15-07010018	148
834956005	PAF8-05030008	98
847635001	TEN00838	73
850841002	PAF8-05030200	98
850842001	PAF8-005030010	98
853771004	PAF8-02000100	95
853811008	PAF15-07060001	80
855676002	RM855676002	97-174-175-233-234
855676003	PAF15-07000031	101
855676003	REC825212T02	174
855676004	REC67F-12411-01	174-175
855676005	RM855676005	174
855959001	PAF8-05030004	98
880596504	REC8M6000359	161
880596522	REC8M6000359	161
880596524	REC8M6000359	161
880640508	RM880640508	174-175-237
885599004	REC8M0067307	174
892319001	REC67C-11351-00	146
892777002	PAF8-04000302	185
894079002	CM67F-11325-00	70
895167001	PAF8-00000100	95
899883230	REC899883230	84
8500550014	REC850055001	174
27-803508017	PAF8-05000002	145
50-32403	PH130-0040	75
1-855679	PAF15-07030005	103
10-19937-16	REC10-816928	205
10-30720	REC10-30720	231
10-40011128	PAGB/T5783-M6X20	107
10-41884M	PAGB/T5783-2000	101
10-41889M	REC6A0-14325-00	160

R.O. /OEM	REF	PAG
10-43092M	PAGB/T5783-2000	101
10-48408	REC10-48408	187
10-49908	REC10-49908	189
10-69570	REC10-69570	178
10-79953A2	REC10-79953Q04	231
10-79953Q04	REC10-79953Q04	197
10-79953Q2	REC10-79953Q04	187-189-191-193-195-199-201-203-205
10-80573M	REC647-14323-00	160
10-806327	REC10-806327	197-205
10-816928	REC10-816928	197
10-82500925	PAGB/T5783-M6X25	105-107
10-82500930	PAGB/T5783-2000	101
10-825010	PAF25-05020204	109
10-82503395	PAF25-05000002	107
10-825046	PAF15-07040303	105-109
10-825046001	PAF15-07040303	98
10-82506182	PAGB/T5782-M8X80	107
10-8257021	PAGB/T5783-2000	101
10-82641030	PAF25-05050019	109
10-826844-30	REC10-82684430	187-195
10-826957M	PAGB/T5783-2000	103
10-827607	PAF25-05050006	107
10-850879	PAGB/T5783-2000	103
10-855677	PAF15-07000028	105
10-855778	PAGB/T5783-2000	101
10-857139	PAGB/T5782-M8X35	107
10-88348935	PAGB/T5782-M6X35	107
10-88348935	PAGB/T5783-M6X25	107
10-88348935	PAGB/T5783-M6X35	107
10-89514001	PAF8-00000003	97
10-94320	REC10-94320	122
10-96411	REC10-96411	202-231
11-13436	REC11-13436	202
11-13438	REC11-8267089	201-202
11-13914A2	REC13914Q02	233
11-31990A2	REC11-31990Q02	233
11-35921	REC11-35921	195-197-203-205-208
11-40119-12	REC11-4011912	189
11-401378	REC11-401378	195
11-40140	REC11-40140	187
11-45812	REC11-859124	201
11-52407Q1	REC90301-ZW1-003	195
11-52707	REC90301-ZW1-003	232
11-52707A1	REC11-52707Q1	233
11-52707Q1	REC11-52707Q1	202-204-233
11-55910	REC313339	191-193-201-208
11-69578	REC11-69578Q1	232
11-69578A1	REC11-69578Q1	191-193-201
11-81773M	PAF25-05000026	109
11-826150	PAF15-07040304	105-109
11-826150001	PAF15-07040304	98
11-827614	REC90301-ZW1-003	203
11-827614Q	REC11-52707Q1	205
11-855679001	PAF8-05010016	98
11-88228	REC11-88228	189
11489M	REC6G1-14985-00	160
11490M	REC6G1-14546-00	159
11497M	REC6G1-24471-00	164
11499M	REC6G1-24411-00	164
11502M	REC6G1-W0093-00	156-157-159
11560M	REC6G1-45113-A1	146
11737T	REC6F5-85540-22	84
11919M	REC6E5-12411-02	115-174
11921M	REC6E0-26301-01	161
12-12577	REC12-12577	195
12-13305M	REC90209-27M07	119
12-16448	REC12-16448	187
12-16826	PAGB/T97.1-6	183
12-19183	REC12-191833	232
12-19183-2	REC12-191833	205
12-19183-3	REC12-191833	187-189-191-193-195-201-203
12-20260	REC12-191833	199-232
12-29245	REC12-29245	189-191-201-202
12-31211A2	REC12-31211Q03	232
12-31211A3	REC12-31211Q03	203-205
12-38453	REC12-38453	148-201
12-4002319	PAF25-05050018	109
12-41369	REC12-41369	187
12-45176	REC12-45176	195
12-76451	REC12-76451	178
12-77674	REC12-77674	197-201-203-205-232
12-78910	REC12-78910	203
12-81816M	REC90201-12565	116
12-81831M	REC90201-20417	119
12-822248	REC12-822248	187

R.O. /OEM	REF	PAG
12-825044	PAF25-05050003	109
12-825467	REC12-31211Q01	205-210-232
12-825498	PAGB/T5287-6	103
12-82710M	PAF15-07040017	103
12-835467-1	REC12-835467Q01	203
12-84620M	REC90209-18112	113-115-116
12-850843	PAF15-07030004	103
12-85303	REC12-85303	178
12-855941	REC12-855941	195
12-858234	REC8M0005777	193
12-86645	REC12-86645	232
12-86645-1	REC12-86645	189-191
12-89302	REC12-29245	189
12-895118001	PAF8-05030015	98
12-92721	REC350038	197-203-205-232
12-94182	REC12-94182	178
12596T2	REC12596T2	195
13-42351-1	REC13-423511	203-205-232
13191A1	REC13191Q01	195-232
13301M	REC6F5-11515-00	119
134-135	RM27-8M0033476	136-142
1395-4808-1	REC1395-48401	158-169-170-171-172
1395-5109-1	REC40480	158
1395-6200	REC1395-6200	158-169-170
1395-6452	REC1395-6452	158
1395-7623	REC1395-7623	160
1395-7824	REC1395-7824	160-172-173
1395-811223-1	REC1395-8112231	158-168-169-170-171
1395-811690-1	REC1395-811690-1	160-172-173
1395-811691 2	REC1395-811691-2	157-159-172-173
1395-811691 3	REC1395-811691-3	157-159
1395-823635-4	REC1395-823635-4	157-159
1395-8318	REC1395-8318	160-167-168-169-170-171-172
1395-8506	REC1395-6452	158
1395-8673	REC1395-8673	160
1395-8983	REC1395-8673	160
1395-9022	REC1395-9022	160-167-169
1395-9024	REC1395-9024	159-169
1395-9258	REC1399-1473	160
1395-9262-1	REC40470	158
1395-9267	REC1395-7623	160
1395-9293	REC1395-9594	161-168-169-170-171
1395-9595-1	REC1395-9595-1	160-168-169-170-171
1395-9651	REC1395-9651	158-168-169
1399-1138	REC1399-1473	160
1399-1717	REC1395-2015	158
1399-2015	REC1395-2015	158
1399-3938	REC1399-3938	67
1399-5135	REC1395-5198	158
1399-5137	REC1399-5137	158-167-168-169
1399-5198	REC1395-5198	158
1399-99	REC1399-99	150
14-18323	REC14-18323	205
14-31210	REC90508-ZW1-003	232
14-76281	REC14-76281Q	191-193-201-232
14-79447	REC14-79447	203
14-816629	REC90508-ZW1-003	205
14-816629Q	REC90508-ZW1-003	195-203
14180M	REC6E7-14385-00	160
14216M	REC6E8-14390-12	159
14307, A1	REC14307T01	162
14307T01	REC14307T01	162
14334A3	REC14334A3	193-214-219-222
14479-1	REC14479-1	178
14586A3	REC14586A3	175
14586A7	REC14586A7	175-176
14857A10, A16	REC14857A16	89
15-38657A1	REC15-38657A1	197
15-42637A1	REC15-42637A1	203-205-231
15-44491A1	REC15-44491A1	195-205
15-44492A1	REC15-8M0063265	195
15-47397A1	REC15-47397A1	203-205-231
15-812770A1	REC15-812770A1	193
15-884327A01	REC15-884327A02	197
15-891936A01	REC15-891936A01	197
15-92881A1	RM15-92881A1	201
155278A1	REC155278A1	166-168-169-171-172
16058T	REC16058	89
16061T04	REC16061T04	83
16158 5	PAF8-04000008	185
16158 6	PAF8-04000006	185
16158 7	PAF8-04000005	185
1623-822442A19	REC1623-822442A19	179
1623-822442A20	REC1623-822442A20	179
1623-859399T13	REC1623-859399T13	179
1623-859399T14	REC1623-859399T14	179
1647-9148T81	REC1647-9148T81	179
1647-9148T82	REC1647-9148T82	179
1647-9148T84	REC1647-9148T84	179
1647-9148T85	REC1647-9148T85	179
1667-901110, 11	REC1667-9011R6	179
1667-901167, 78	REC1667-9011R6	179
1667-9011G51	REC1667-9011R6	179
1667-9011G70	REC1667-9011G90	179
1667-9011G90	REC1667-9011G90	179
1667-9011J41	REC1667-9011J41	179
1667-9011J6	REC1667-9011R6	179
1667-9011R6	REC1667-9011R6	179
17-11794M	REC6E5-14386-01	161
17-13302T	REC6F5-11681-00	119
17-14193M	REC6G1-11681-00	113-115-116
17-30632	REC17-8M0084681	195-197-203-205-231
17-38113	REC17-8M0020942	193-201
17-43043	REC17-43043	193
17-78905	REC17-8M0084243	203
17-80451M	REC647-14386-10	161
17-81278M	REC663-14548-00	161
17-822369	REC17-822369	191
17-825010	PAF25-00000014	107
17-825689	PAF15-07000001	96-101-105
17-825956	PAF25-05050016	109
17-828356	REC17-828356	197-203-205
17-85096	REC17-85096	189
17-85500	REC17-85500	189
17-85593	REC17-85593	189-191
17-92639M	REC676-14186-00	161
17-9521811	PAF8-04000021	231
17-97730M	REC688-14548-00	161
17050M	REC6H3-14590-00	159
17068M	REC6E9-W0093-02	156-159
17264T2	CM17264	70-235-236
17264T2	TEN00827	193
17514A 1	REC31-17514A2	120
17649A1/A02	PH200-T015	79
18-4446	REC91-859046Q4	180
18495-A10-12-15-18-19-26	REC18495A26	84
18495A4-5-6-8-13	REC18495A13	84
18495A9, A14, A15, A20, A21, A25, A30	REC18495A30	84-85
18842M	PAF15-00000006	112
19052A1, 2, 3, 4, 5, 6, 8	REC19052A8	84-85-86
19217A1-A5	PH200-T003	79
19271-1	REC19271-1	160-169
19291A3	REC19291A3	191-193
19513 3	REC44-195133	183
19700A2	REC19700A2	193-214-219-222
19755T7	REC19755T7	197
21-13424A1	REC21-13424A1	165-168-169
21-30430A1	REC1395-6452	172
21-30430A13	REC21-30430A13	165-170
21-30430A14	REC21-30430A14	166-170-171-172
21-30430A3	REC21-30430A3	167-169-170-171-172
21-30430A4	REC21-30430A4	167-169
21-30430A7	REC21-30430A7	166-171-172
21-41279M	REC6E0-41114-A1	148
21-42990A10	REC21-42990A10	165-168-169-170-171-172-173
21-80727M	REC650-11370-00	112-116-118
22-13563T 7	GS31082	65
22-13563T-3	GS31027	65
22-13563T-3	GS31028	65
22-142131	GS31026	65
22-424254	REC22-424254	67
22-479452	PAF15-04000002	107
22-67892A1	REC22-67892A05	187-189-191-193-195-201-203-205-231
22-687271	REC22-687271	177
22-68728	REC22-68728	177
22-8189941	REC22-8189941	67
22-822644	PAF15-07010006	101
22-822644001	PAF8-05010002	97
22-83326M	PAF15-04000005	96-101
22-83369M	REC676-14966-00	160
22-8M0001721	REC22-8M0001721	66
22-95368 3	PAF4-03000023	183
22-9964-1	REC331886	178
22-996642	PAF25-05010113	107
22831T03	GS31078	65
23-29804	REC23-29804T	202-232
23-29804	REC26-816575A2	231
23-41367	REC23-41367	187
23-42091-1	REC23-420911	187
23-43045	REC23-43045	193
23-43052A4	REC23-43052A4	195
23-77631A2	REC23-77631A2	201-203
23-813696A2	REC23-813696A2	193
23-815921A4	REC23-815921A21	205
23-815921A4 -A10	REC23-815921A21	230
23-81841M	REC93101-20M34	115
23-821927	REC23-821927	187
23-823943	REC23-823943	187
23-823944	REC23-823944	187
23-824108	REC23-824108	203-205
23-825021	PAF25-05020203-1	109
23-8250212	PAF25-05020203-2	109
23-825024	PAF25-05010302-1	109
23-8250241	PAF25-05010302-2	109
23-85095	REC23-85095	189
23-85557	REC23-85557	189
23-86215	REC23-86215	199
23-891919001	REC23-891919001	197
23014A1	REC1395-6452	172
24-29340A1-T1	REC24-13421	74
24-30893	REC24-30893	193-195-197-203-205-231
24-38114	REC24-38114	191-201-231
24-42996	REC24-42996	178
24-47968	REC24-47968	178
24-64878	REC24-64878	178
24-78962	REC24-78962	203
24-79910	REC24-79910	203
24-803554005	PAF8-05030005	98
24-815418	REC24-815418	193
24-823678	PAF25-05050005	109
24-825052	PAF25-05050011	109
24-825052	PAF25-05050012	109
24-825452	PAF15-07040014	105
24-825452001	PAF8-05030009	98
24-825453	PAF15-07040013	105
24-850840	PAF15-07040005	105
24-88680	REC24-88680	189
24-90392	REC24-90392	178
2418-830269A1	PAF25-05020001	109-127
2419-82500935	PAF25-05050200	109
25-11451M	REC93210-54M54	115
25-11759M	REC93210-65M50	118
25-20081	REC25-20081	132
25-20273	REC25-20273	201-215
25-20826	REC308627	132
25-20863	REC25-80863	132
25-21836	REC25-21836	205
25-25439	REC25-25439	201-203
25-26722	REC302588	201
25-26802	REC303347	199
25-26855	REC3852928	191
25-29439	REC309731	199
25-30224	REC25-30224	193
25-30271	REC25-30271	202-215
25-30529	REC25-30529	199
25-31305	REC553126	132
25-31534	REC25-31534	205
25-31986	REC3852866	201
25-32546	REC25-32546	132-134
25-33145	REC25-33145	187
25-33466	PAF25-05000011	150
25-35027	REC25-35027	205
25-35276	REC310584	189
25-36318	REC25-36318	205
25-45258	REC25-45258	193
25-45710	REC25-457101	195
25-47254	REC310414	132
25-54029	REC25-33465	132-134-135
25-62700	REC25-62700	132-134-135
25-62704	REC3852045	199
25-64067	REC25-823683	122
25-64872	REC25-64872	178
25-67207	REC25-62706	132-133-135
25-69202	REC25-67202	189
25-803514	REC26-803514	114-133
25-809086	REC25-809086	163
25-815460	REC25-80863	191
25-815460	REC25-815460	193
25-818573	REC25-818573	145
25-821308	REC25-821308	191
25-822236	REC25-822236	187
25-82276M	REC93210-42159	116
25-823683	REC25-823683	132

R.O. /OEM	REF	PAG
25-825040	PAF15-07010009	107
25-825057003	PAGB/T3452.1-35.5x1.	149
25-8250572	PAGB3452.1-82	150
25-825492	PAF4-04000008	105
25-825492	PAJASOF40431-025	107
25-826152	PAF25-05050015	109-110
25-826153	PAF25-05050013	109
25-826153	PAF25-05050014	110
25-826154	PAF25-05050013	110
25-826154	PAF25-05050014	109
25-833103	PAF25-05000004	107-145
25-83348M	REC93210-22M02	118
25-8527681	PAF15-07050003	103
25-853525	PAF15-07000007	149
25-854341	REC67C-11356-00	110-145
25-854639	REC25-854639	178
25-854722	PAGBT3452.1-97.5X1.8	107
25-85549	REC25-85549	189
25-855690	PAF15-07010027	103
25-85594	REC301877	189-191
25-86203	REC25-86203	189-215
25-88955	REC335523	132-135
25-89497	REC25-89497	132-135
25-896322	REC25-36318	197
25-896523	REC25-896523	134-197
25-896524	REC25-31534	197-203
25-8M0052669	PAJASOF40431-025	96
25-90011	REC25-90011	132-203-205
25-95602M	REC93210-42M70	116
25-97386	REC310414	195
25661-1	PH375-0011	77
26-11758M	REC93101-30M33	118
26-12224	REC26-12224	145-203-205
26-12709	REC26-12709	145
26-14077	REC26-76868	145
26-14195M	REC93102-20M25	115-116
26-14240	REC26-14240	145
26-16051	REC26-16051	111
26-16162	REC26-16162	183
26-16977	REC26-16977	132-145-203-229-230
26-18816	REC26-807006	145
26-18843M	REC93101-20M29	113-116
26-189721	REC93104-16M01	118
26-20070	REC908855	145-229
26-24590	REC26-24590	145-229-230
26-30900	REC327031	199
26-30913	REC26-30913	145-199-229
26-32511	REC26-32511	145
26-32911	REC26-55682	145
26-33467	REC26-33467	145-229
26-33613	REC26-33613	187-199
26-36558	REC26-36558	199
26-38452	REC26-38452	201
26-38970	REC26-38970	202-230
26-41131	REC26-76127	189-229
26-41132	REC26-41132	189
26-41365-1	REC26-413651	187
26-41365A3	REC26-41365A3	187-226-228
26-41953	REC764337	134-135-145
26-41953 3	REC26-419533	132
26-42102-1	REC26-421021	187
26-42133	REC26-42133	187
26-43035	REC26-43035	194-195
26-43035A4	REC26-43035A4	194-227-228
26-43036	REC26-43036	145-194-195-229-230
26-43943	REC26-43993	145
26-43993	REC26-43993	121-122-132
26-45587	REC26-45587	145
26-55682	REC26-55682	145-229-230
26-55682A1	REC26-55682A1	202-227-228
26-56397	REC26-56397	132-133-145
26-56788	REC320961	145
26-62818	REC26-62818	145
26-66022	REC26-66022	187-199
26-66301	REC26-66301	132-134
26-66302	REC26-66302	132-133-205
26-66303A1	REC26-66303A1	227-228
26-68493	REC26-823894	145
26-69188	REC26-69188	145-191-193-201-229
26-69189	REC26-69189	145-191-193-201-229
26-70081	REC26-70081	145-195-229-230
26-72785	REC26-72785	145
26-76868	REC26-76868	145-195-203-205-229-230
26-77066A1	REC26-77066A1	199-226-228

R.O. /OEM	REF	PAG
26-79831	REC26-79831	145-201-229
26-79831A1	REC26-79831A1	200-227-228
26-814669	REC26-814669	193
26-814669A2	REC26-814669A2	192-227-228
26-814670	REC26-814670	193
26-815449	REC26-859093	132-135
26-816464	REC26-8164641	145
26-816464-1	REC26-8164641	193-195-197-201-203-205
26-816575A2	REC26-816575A2	197-205
26-816575A4	REC26-816575A4	204-227-228
26-816575A5	REC26-816575A5	204-227-228
26-820645A1	REC26-820645A1	227
26-821092	REC26-821092	145
26-821309	REC26-821309	191
26-821310	REC26-821310	191
26-82165M	REC93101-14M01	116
26-821928	REC26-821928	187
26-822647	PAPS2700.04.03	105-109
26-825027	PAF25-05020003	109-110-133
26-825048	PAF25-05050021	109-110
26-825455	PAF15-07040008	103
26-825455001	PAF8-05030011	98
26-830749	REC26-830749	197
26-830749A01	REC26-830749A01	196
26-830898	REC26-830898	132-135
26-832013	PAF25-05020002	109-110-133
26-850850	PAF15-07010014	101
26-85090	REC26-85090001	189
26-85090A1	REC26-85090A1	189-226-228
26-85090A2	REC26-85090A2	189-226-228
26-85107	REC26-00173	145
26-85370711	REC26-85370711	114
26-855680	PAF15-07030006	103-133
26-855681	PAF15-07030007	103-133
26-855681001	PAF8-05010012	99
26-880596502	REC26-880596502	163
26-888483	REC26-888483	197
26-888906	REC26-888483	197
26-888920	REC26-888920	197
26-888921	REC26-888921	197
26-89236	REC26-70080	145
26-89238	REC26-89238	145-203-230
26-89238A2	REC26-89238A2	227-228
26-90063	REC26-897153	145-199-229
26-90562	REC26-90562	145-201-229-230
26-94038	REC26-94038	145-229-230
26-94663M	REC93210-42159	115
26-95472M	REC93101-10M25	113
26-96503	REC26-965031	145
26-99325	REC26-99325	187
26-99325	REC301877	189
27-11338A88	REC27-11338A88	141-144
27-11454M	REC6G1-11193-A1	115-148
27-11456M	REC6G1-41112-A1	115-148
27-11456M	REC6G1-41114-A0	115
27-11500M	REC6G1-24431-01	165
27-11560M	REC6G1-45113-A1	115
27-11568M	REC6G1-41133-A0	153
27-11745M	REC6F5-11181-A2	118
27-11749M	REC6F6-11193-A1	118
27-11754	REC6F5-41112-A0	118
27-11754M	PAF15-04000003	107-110-118
27-11756	REC6F5-41114-A0	118
27-11885	REC6F5-45113-A0	147
27-13461A99	REC27-13461A99	140-144
27-13937-6	REC27-139376	151
27-13958-1	REC27-139581	155
27-14318-3	REC27-14318005	176
27-14697A87	REC27-14697A87	141-144
27-15172-3	REC27-151724	151
27-16717M	REC696-45113-00	147
27-18785T	REC27-18785T	137-144
27-18786T	REC27-418786T	138-144
27-18937M	REC6E7-11181-00	137
27-19138M	REC689-11181-00	137
27-19175	REC676-45114-A1	153
27-19202	REC27-19202001	187-216
27-19202	REC27-192043	216
27-19204-3	REC27-192043	187
27-19205-1	REC27-19205002	176
27-19551	REC27-19551	201-217
27-19552	REC27-19552	201
27-19553	REC27-19553	201-216
27-19701	REC27-8M4502052	193
27-25725	REC27-25725	91
27-25848	REC27-25848	148
27-25849	REC27-25849	150
27-27936-1	REC27-279361	150

R.O. /OEM	REF	PAG
27-31402	REC27-31402	150
27-32438	REC27-32438	217
27-327674	REC327674	154
27-32771	REC27-32771	217
27-38501-1	REC27-385011	154
27-39401	REC27-39401	148
27-39402	REC27-39402	156
27-39623	REC27-396231	216
27-39625	REC27-39625	216
27-39626	REC27-39626	216
27-41245-1	REC27-41245-1	138-144
27-41246-1	REC27-41246-1	138-144
27-41417-2	REC414172	150
27-41418-1	REC414181	150
27-41475-8	REC414758	153
27-414991	REC414991	153
27-41499A87	REC27-41499A87	139-142-143
27-41670-3	REC27-41670006	146
27-42364A92	REC27-42364A92	139-142
27-42631-1	REC27-426311	203-217
27-43004-1	REC27-43004009	155
27-43004A86, A90, 1	REC27-43004A99	122-123
27-43004A90	REC27-43004A99	121-140
27-43004A99	REC27-43004A99	121-140
27-430057	REC27-430057	149
27-43006-8	REC27-430068	177
27-43007-3	REC27-430075	147
27-43008	REC27-430086	155
27-43033-1	REC27-430331	194-197-205-216
27-43034-1	REC27-8172771	217
27-43047-2	REC27-430472	194-216
27-43337-4	REC27-433374	154
27-43777-2	REC27-437772	152
27-43779-2	REC27-437792	153
27-43779A87	REC27-43779A87	140-143
27-46351	REC27-46351	91
27-47190	REC27-47190	91
27-48164-1	REC27-481641	151
27-48801	REC27-48801	156
27-55279-1	REC27-552791	151
27-62107	REC27-62107	151
27-62386	REC27-62386001	148-176
27-62860-1	REC27-628601	147
27-65744-2	REC27-657443	152
27-66847	REC27-66847	154-177
27-67275-1	REC27-672751	152
27-67751-1	REC27-677511	149
27-69238-1	REC27-692381	155
27-69524-2	REC27-695242	154
27-69525-2	REC27-695252	154
27-70335-1	REC27-703351	155
27-72486A32	REC27-72486A32	140-143
27-733771	REC27-733771	151
27-73645A87	REC27-73645A87	140-143-144
27-75786	REC27-75786	155
27-75791	REC27-757911	150
27-75909	REC27-75909	147
27-76636	REC27-76636	149
27-76952	REC27-76952	151
27-78028A78	REC27-78028A78	139-143
27-78069	REC27-8231422	147
27-78246	REC27-782461	155
27-78409	REC27-78409	155
27-78410	REC27-78410	152
27-78411	REC27-78411	155
27-78690	REC27-78690002	149-176
27-78690002	REC27-78690002	176
27-79583-1	REC27-79583-1	138-144
27-79583A81	REC27-79583A81	141-144
27-79650-1	REC27-796501	147
27-803508	REC27-803508	136
27-803508017	PAF8-05000002	98
27-80355	REC646-14623-A1	153
27-803663	REC350-01005-0	137
27-803663018	REC351-01005-0	137
27-803663021	REC3B2-01005-0	137
27-8041151	REC67F-11181-03	136-142
27-80613M	REC648-24434-01	165
27-80614M	REC648-24435-02	165
27-81031M	REC655-12414-A1	176
27-812370	REC27-821370	151
27-81254M	REC663-11193-00	152
27-81266M	REC663-12414-00	177
27-812775-4	REC27-812775A01	155
27-812775-5	REC27-8127755	155
27-812867-1	REC27-8128671	177
27-8128672	REC27-8128672	177
27-812867A97	REC27-812867A97	120-140

R.O. /OEM	REF	PAG
27-812868	REC27-812868	150
27-812869	REC27-812869	151
27-8129391	REC346-01005-0	137
27-81293910	REC3C8-01005-4	137
27-81325	REC68V-14984-00	163
27-81331M	REC663-41114-00	149
27-813859	REC27-883775	151
27-813932-2	REC813932	148
27-814195-1	REC27-8141951	152
27-81440M	REC663-45123-00	154
27-81440M	REC688-45123-00	154
27-814555M	REC6E9-12414-A1	177
27-814754A00	REC27-814754A00	141-144
27-81570M	REC664-41114-A0	148
27-815791A92	REC27-815791A92	141-144
27-817277-1	REC27-8172771	194-197-205
27-819113	REC819113	151
27-819114	REC819114	151
27-822189	REC27-822189	191-193-216
27-822217	REC27-822217	191-216
27-822420A94	REC27-822420A94	139
27-822844T04	REC27-822844T04	137-144
27-823700-2	REC823700	147
27-824853	PAF15-07010022	101-107-176
27-824853	PAF4-04000011	110
27-825032	REC27-825032	136
27-825040	PAF15-07010009	101
27-825231	REC67C-11351-00	110
27-8252310	PAF25-00000013	107
27-825231A99	REC67C-W0001-01	110
27-8254821	REC6G8-11181-A1	96-136-142
27-825693	REC6G8-41112-02	96
27-825701	REC6G8-12414-A0	96
27-825847	REC6G8-11351-A0	96-142-146
27-825847A95	REC6G8-W0001-A3	96-138-142
27-826549	REC826549	147
27-826738	REC826738	154
27-826991M	REC664-41134-A0	154
27-827176M	REC6E9-41114-A0	149
27-827284	REC27-827284	177
27-827610	PAF25-05010111	110
27-827610	PAF25-05050007	107
27-828553A97	REC27-828553A97	139
27-830270	PAF25-05040000	107-136
27-830270A98	REC65W-W0001-00	106-138-142
27-830298	PAF25-05010111	107-148-177
27-832934A00	REC27-832934A00	141
27-83336M	REC6E9-12414-A1	176
27-83338M	REC676-41112-A0	149
27-83383M	REC676-41133-A0	154
27-8347751	REC67C-41114-00	110
27-834777	REC67C-11181-01	110-136-142
27-834952	PAF15-07010018	177
27-834952001	PAF8-05010004	97-148-177
27-834952002	PAF15-07010018	101
27-835383001	PAF15-07000017	150
27-835427003	PAF8-00000004	97-142-146
27-8354272	PAF15-00000014	101-142-146
27-835427A00	REC66M-W0001-01	100-142
27-835427A04	REC3V1-87121-0	97-138
27-83940M	REC27-83940	176
27-83940M	REC682-12414-A1	176
27-83951M	REC682-41114-00	148
27-83955M	REC682-41133-A0	153
27-84264	REC677-24435-01	165
27-84741M	REC689-41114-A0	149
27-847525-1	REC847525	152
27-84775	REC61T-45113-A0	146
27-850283	REC27-850283	152
27-850836	PAF15-07000100	105-136-142
27-850836001	PAF8-05000100	98-136-142
27-85087	REC27-85087	216
27-853523	PAF15-07040016	103-124
27-853523001	PAF8-05030012	98-124
27-853525001	PAF8-05000009	150
27-853702005	PAF8-05010005	97-176
27-8547801	PAF25-05010108	107
27-85487	REC27-85487	153
27-85490-2	REC27-856729	152
27-85491-2	REC27-854913	149
27-85491A90	REC27-85491A90	139-143
27-85492-2	REC27-854924	154
27-85608-1	REC27-856081	203-217
27-85610-1	REC27-856704	217
27-85653-1	REC27-856730	155
27-85653A87	REC27-85653A87	140-144
27-856542-1	REC856542	151
27-857081	REC8M0045278	136
27-858524	REC27-858524	202-217
27-8587321	REC68V-11351-00	142-146
27-859352	REC67C-11351-00	146
27-87736-1	REC27-877361	152
27-880552A07, A06	RM27-880552A07	139-142
27-880729	REC27-880729	197
27-883213	REC27-883213	163
27-883252	REC27-883252	163
27-88449	REC27-88449	153
27-88449A32	REC27-88449A32	140-143
27-88451-1	REC27-884511	147
27-887810011	REC69J-11351-11	142-146
27-887810A04	REC6P2-W0001-01	138-142
27-887825	REC887825	149
27-887848	REC69J-11181-03	136-142-144
27-887848-1	REC69J-11182-03	137-142
27-889319	REC27-889319	163
27-89221-1	REC27-892211	151
27-89221A88	REC27-89221A88	141-144
27-892320	REC892320	154
27-895374006	RM27-8M0033476	136-142
27-896142A06, A07	RM27-896142A07	139-142
27-89937	REC27-89937	146
27-8M0024565	RM27-8M0024565	136-142
27-8M0045278	REC8M0045278	136
27-8M0062091	REC3C8-01005-4	137
27-8M0069692	PAF25-00000013	146
27-8M4502052	REC27-8M4502052	217
27-90430-1	REC27-904301	151
27-90484-1	REC27-904841	155
27-90484A88	REC27-90484A88	141-144
27-91754M	REC6E0-24434-00	165
27-91780	REC6E0-45113-A1	113
27-91780M	REC6E0-45113-A1	146
27-93536-1	REC27-935361	149
27-95183-3	REC951853	153
27-95220	PAF4-03000024	183
27-95299001	REC309-01005-2	137
27-95595M	REC677-11181-A0	116-137
27-95597M	REC677-41112-A0	116
27-96278	REC27-96278	153
27-96281T01	REC27-96542-1	137
27-96542-1	REC27-96542-1	137
27-96602M	REC682-11351-A0	146
27-96618	REC682-45113-A0	153
27-96656M	REC689-41112-A0	149
27-96761-1	REC27-967611	152
27-97704M	REC6E9-11193-A0	152
27-97706M	REC6E9-12414-A1	118
27-98769-1	REC27-987691	150
27-98952M	REC697-45114-00	153
27-99173-2	REC27-991734	155
27-99176-3	REC27-991764	147
27-99177-2	REC27-991772	147
27-993163	REC27-993163	152
27-99326-1	REC27-993261	189-216
27-99776-1	REC27-997761	147
27-99991M	REC6E0-11193-A1	112
27-99993M	REC6E0-41114-A1	112
27-99995M	REC6E0-41112-A1	112-148
2704-821896A4	REC2704-821896A4	125
2704-826191A4	REC2704-826191T4K	125-129
2704-826191T4	REC2704-826191T4K	129-130
2720-881054T10	REC2720-881054T10K	130
2720-881054T3	REC2720-881054T10K	126
2720-881055T10	REC2720-881055T10K	130
2720-881055T3	REC2720-881055T10K	126
28-18856M	PAF4-04000019	109
28-19699	REC28-8M0032831	231
28-30281	REC28-30281	201-203
28-42376A2	REC28-42376A2	187-231
28-43037	REC28-8M0032833	194-197-205-231
28-56654	REC8M0032834	202-231
28-56662	REC8M0032837	231
28-803556	PAF8-05030007	98
28-822651	PAF15-07040007	105-109
28-825666	PAGB/T1099-1979	103
28-825666001	PAF4-04000019	99
28-85119	REC28-8M0032838	231
28-8M0032831	REC28-8M0032831	193
28-8M0032837	REC8M0032837	231
28-8M0032838	REC28-8M0032838	189-191
28-91800	PAF25-05000024	110
28-95229	PAT3.6-04000006	98
2806-830267T3	PAF25-05010000	107
29-13304M	REC93310-727V7	119
29-47270	REC29-47270	125-127
29-67483	REC29-67483	126-127
29-71422-1	REC29-71422-1	127-131
29-818391	REC29-818391001	125-127
29-822553	REC29-822553	126-127-130
29-82350M	REC93602-14118	116
29-82353M	REC93603-21111	119
29-88258	REC29-88258	122-125-127
29-88258001	REC29-88258	126
30-11766T	REC93306-307U0	119
30-11767T	REC93306-306V1	119
30-16049	REC30-16049	111-114-132-133
30-160494	REC30-160494	117-132
30-16049T01	REC30-16049T01	117
30-18859M	REC93306-204U0	113-116
30-20839T	REC30-20839T	191-193-201
30-30956	REC387247	205
30-62567T	REC30-62567T	132-134
30-63742	REC377139	132
30-63742T	REC377139	132
30-64424	REC30-64424T	132
30-64424T	REC30-64424T	132
30-67923	REC30-67923T	132
30-67923T	REC30-67923T	132
30-82299M	REC93306-204U0	115
30-88957T	REC30-88957T	203-205
30-95347	REC30-95347	183
30185T3	GS31079	65
30185T3	GS31080	65
3030T/M	REC663-85540-15	84
31-12576	REC31-12576	195
31-12578T	REC31-12578T	195
31-13300T	REC93332-000UE	119
31-16052	REC31-16052	111-117-126-129
31-16756A4	REC31-16756A4	127-134-135
31-16756A6	REC31-16756A6	132-130
31-17514A1, A2	REC31-17514A2	127
31-21700	REC31-21700	191-193-201
31-21739	REC31-21739	189-193-201
31-30894A1	REC31-30894A1	195-203-205-206-207-208
31-30895	REC31-30895T	195
31-30895T	REC31-30895T	203-205
31-30956	REC387247	195
31-30956T	REC387247	203
31-32898T	REC31-32898T	203
31-35928A1/T1	REC31-35928T1	205
31-36387A1	REC31-36387A1	203-205
31-38356A1	REC31-38356A1	201-206
31-41326	REC31-41326	189-191
31-42647A1	REC387817	197-203-205
31-42677A1	REC31-42677A1	195
31-43012A1	REC31-43012A1	122-126
31-43012A2	REC31-43012A1	126
31-43012T3	REC31-43013T3	127
31-43013T3	REC31-43013T3	122
31-54928-1	REC382343	203
31-62596A1	REC31-62596A1	127-129-130-131
31-6291T	REC31-62091T	201
31-63079A1	REC31-53079A1	203
31-67445	REC378252	127
31-74248T	REC31-74248T	127-134-135
31-77420A1	REC31-77420A1	193-201
31-78172A1	REC31-78172A1	203-207-208
31-803675 2	REC31-8036752	127
31-8036752	REC31-8036752	114
31-812767A1	REC983892	193-206
31-812768	REC31-812768	193
31-812873A1	REC31-812873A1	132-134
31-813048	REC31-813048	111-127-129
31-813048 2	REC31-8130482	127
31-8130482	REC31-8130482	117
31-816773A1	REC31-816773A2	132-135
31-821321A1	REC31-821321A1	187-191
31-828439A2	REC31-828439A2	205-208
31-834960	PAF15-07010024	103
31-834960T08	PAF8-05010009	99
31-855553	REC31-855553	120
31-879877A1	REC31-879877A1	127-129-131
31-88269T	REC5007190	127
31-884323T01	REC31-884323T01	197
31-884325T01	REC31-884325T01	197
31-884330T01	REC31-884330T01	197
31-91721M	REC93310-112V0	113-115
31-94769M	REC93310-418U0	116
31-98294A1	REC31-98294A1	189
31-99328A1	REC31-66668A1	189-191-206
31640Q4	CM31640	195-201-205-234-235-236-237
31640Q4	CM31640A	195-201-205
32-88005	REC32-88005	79

R.O. /OEM	REF	PAG
32-88006	REC32-88006	79
32-895153	PAF8-05000017	97
32193A2	REC1463-9382	88
33-11458M	NGKBR6HS-10	115
33-41263M	NGKBR7HS-10	115
33-53098	NGKBR7HS	92-93-94-112
33-803507	NGKDCPR6E	92-94-98-233-234
33-82370M	NGKB7HS-10	94-116
33-82371M	NGKB7HS	118
33-827858	NGKDPR6EA-9	92-94-105-107-233-234-235-236
33-827859	NGKCR6HS	92-94-96
332-2910	PH350-0003	80
332-2986A21	REC332-2986A27	84
332-2986A22	REC332-2986A27	84
332-2986A25	REC332-2986A27	84
332-2986A27	REC332-2986A27	84
332-4911A2-3-5-8	REC332-4911A8	84
332-5524, A1	REC300-01852	84
332-5524A1-2	REC339-6222A10	83
332-5772A1	REC300-03107	84
332-5772A2	REC300-03107	84
332-5772A3	REC300-03107	84
332-5772A5	REC300-03107	84
332-5772A7	REC300-03107	84
332-7778, A1, A3, A5, A6, A9, A12, A14	REC300-01852	84
338-4733A2	REC332-4911A8	84
339-5212A1	REC339-6120A1	81
339-5287	REC339-6222A10	83
339-5313A1	REC339-6120A1	81
339-5589A1	REC339-6120A1	81
339-5590A1	REC339-6120A1	81
339-6119A1	REC339-6120A1	81
339-6120A1	REC339-6120A1	81
339-6222A1-4-6-8-10	REC339-6222A10	83
339-6222A1-4-6-8-10	REC855713A3	83
339-7370A13	REC300-08309	88
339-7452 A2, A3	REC899883230	84
339-7452A1, A2, A3, A7, A8, A9, A10, A11, A14, A15, A21	REC339-7452A19	84-85
339-778A1-3-5-6-9-12	REC339-6222A10	83
339-803706A1	REC8M0071855	88
339-803844T01	REC803844T01	87
339-825101T	REC339-825101T	88
339-85699A1	REC300-08310	89
339-859738T1	PAF25-05120000	88
339-879984A01	REC339-8M0077471	88
339-879984T00	REC339-8M0077471	88
339-879984T01	REC339-8M0077471	88
339-880615T01	REC339-880615T01	88
339-883778A01	REC339-8M0077473	88
339-883778A02	REC339-8M0077473	88
339-895110T01	PAF8-05040000	156
339-8M0077471	REC339-8M0077471	88
339-8M0077473	REC339-8M0077473	88
34127T2	CM34127	69
34127T2	CM34127A	69
345-00042-0	REC345-00042-0	117-120-129
34762A1	CM34762	69
34762A1	CM34762A	69
35-16248	PAF4-05000300	68-233-234
35-18458Q4	REC35-18458Q4	66
35-822626Q03	REC35-822626Q03	68-101
35-822626Q04	REC35-822626Q04	68-107
35-822626Q1	REC35-822626Q03	68
35-822626Q15	REC35-822626Q15	68
35-822626Q2	REC35-822626Q04	68
35-822626T7	REC35-822626Q15	68
35-826964T	PAF15-07080000	67-234-235-236-237
35-851848003	PAF8-05000024	97
35-853333T	REC35-853333T	68
35-8548091	PAF25-05010107	107
35-877565T1	REC35-877565T	68-234-235-236-237
35-877761K01	REC35-877761Q01	68
35-877761Q01	REC35-877761Q01	68
35-877767K01	REC35-896546T	68
35-877767Q01	REC35-896546T	68
35-877769Q01	REC35-883701K01	68
35-87946Q04	REC35-87946Q04	67
35-87946Q3	REC35-87946Q04	67
35-879885T	REC35-879885T	67-234-235-236-237
35-881323001	REC6C5-13915-00	67
35-883701K01	REC35-883701K01	68
35-884380T	RAC31871	68-237
35-888289T2	REC65L-24563-00	67
35-895152002	PAF8-05000800	97
35-896247	REC35-896247	68-237
35-896546T	REC35-896546T	68
35-897575T01	RM35-8M0082911	68
35-897575T02	RM35-8M0082911	68
35-8M0020349	REC35-8M0122423	68
39-11462M	REC6G1-11610-00	113
39-11768T	REC6F5-11610-00	119
39-11769M	REC6F5-11610-10	119
39-11770T	REC6F5-11610-20	119
39-14197M	REC6J1-11610-00	113
39-14235M	REC689-11610-00	129
39-15320M	REC682-11610-01	129
39-16054A5	REC39-16054A5	117-129
39-18563A12	REC39-18653A12	129
39-18653A12	REC39-18653A12	125
39-19721A6	REC39-19721A6	125-129
39-2784112	RM39-27841A12	130
39-803678A1	REC39-803678A1	117-129
39-803678A3	REC39-803678A3	114-129
39-80422M	REC647-11610-00	116
39-80423M	REC647-11610-10	116
39-80424M	REC647-11610-20	116
39-813011A12	REC39-813011A12	126-127-130
39-817096A6	REC39-817096A6	125-129-130
39-821695A4	REC39-821695A4	125-129
39-822321A12	REC39-822321A2	126
39-822321A2	REC39-822321A2	125
39-8M0055809	PAF8-05020102	99-124
39-93481A12	REC39-93481A12	130
39-96170A12	REC777-815965A6	125
39-96170A12	REC777-9009A7	125
394-1100A3	REC394-1100A3	91
394-1130A1	REC394-1130A1	91
398-173	REC398-173	88
398-174	REC398-174	91
398-2202	REC398-2202	91
398-5454A11-A15-A16-A30-A31-A32-A34-A35-A36-A61-	REC398-5454A35	81-87
398-5454A2, A5, A6, A7, A8, A9, A17, A18, A55	REC398-5454A17	81-86-87
398-5704A2-A4-A5-A7	REC398-5704A7	82-85-86
398-693	REC398-693	91
398-818535A17-18	REC398-832074A4	81
398-818535A3-5-8-9-10-13-14-15	REC398-8778A29	82
398-832075A3-A4-A5-A6-A9-A12	PH400-0002	81
398-852386A4	REC398-852386T8	81
398-852386T8	REC398-852386T8	81
398-852387A4	REC398-852387T9	81
398-852387T9	REC398-852387T9	81
398-8778A10-16-17-18-21-22-23-24-25-26-27-28-29	REC398-8778A29	82
398-9610A18	REC398-9610A18	82
398-9610A3-A5-A6-A9-A14-A19-A22-A24-A33	REC398-9610A19	82
398-9710A11-12-14-15-22-23-25-28-30-31-33-34-36-38-39-43-45-46-47-48-49	REC398-832074A4	81
398-9873A22-A28	PH400-0002	81
398-9873A9-17-19-24-25-28-29-32-33-35-38-39	REC398-832074A4	81
40-825017	PAF25-05020106	109-124
400-834957	PAF15-07030000	103-127
400-834957T01	PAF8-05020001	99-127-133
41-11771T	REC6F5-11633-00	119
41-16056	REC41-16056	111
41-803680002	REC41-803680002	117
41-803680003	REC41-803680003	117
41-80368003	REC41-16056	120
41-8036801	REC41-8036801	114-129
41-825016	PAF25-05020105	109-124
41-825713	PAF15-07020006	103-124
41-825713001	PAF8-05020105	99-124
41-825713002	REC41-825713002	117
41-95601M	REC6G1-11633-00	113-116
41305M	REC696-85540-12	83
42121A2	CM42121	187
42121A2	CM42121A2	70-187-233-234
42461A1	REC42461A1	195
42909A3	REC42909A3	166-170-171
42943A 1	REC42943A1	121-123
42943A1	REC42943A1	122-127
43-16138	REC43-16138	183
43-44104T2	REC43-44104T2	206-207-208
43-803498T1	REC43-803498T1	191-206
43-803499T1	REC43-803499T1	193-206
43-822163T1	REC43-822163T1	191
43-828073A1	REC43-828073A1	205-206-208
43-834955	PAF15-07030003	103
43-834955001	PAF8-05010014	98
43-834973	PAF15-07040018	103
43-834973001	PAF8-05030400	98
43-859321A3	REC43-859321A3	203-205-206-207-208
43-878087A2	REC43-878087A2	206
43-8822163T1	REC43-822163T1	206
43012A 1	REC31-43012A1	121-123
43013T 3	REC31-43013T3	121-123-134
43023-2	REC43023-2	195-232
43055A4	REC43055A4	194-211-219-222-223-224
430775/M	REC695-85540-11	83
43113M	REC692-24410-00	161
43113T	REC692-24410-00	161
43242-3	REC43242-3	161
43242-5	REC43242-5	161
43242-6	REC43242-6	161
43242-7	REC43242-5	161
43242-9	REC43242-9	161
43567T1	REC434391	203
44-12238T	REC44-12238T	195-210
44-824110	REC44-824110	205-210
44-850308	REC44-850308	195-210
44-94148	REC44-94148	203-210
45-16135 1	REC45-161351	183
45-16136 1	REC45-8M0076368	183
45-854808A1	REC45-854808A1	195
45-858765T1	REC45-858765T1	195
45-859105A1	REC45-859105A1	195
45-875222A1	REC45-875222A1	195
45-878575T1	REC45-878575T1	195
46-42040A5	REC46-42040T5	211
46-42040T5	REC46-42040T5	187
46-42089A2	REC46-42089A2	187-213-218-220-221
46-42089A5	REC46-42089A5	187-212-218-220-221
46-42579A3	REC46-8M0077147	203-215-224-225
46-43024A7	REC12094	194-213-219-222-223-224
46-60366Q1	REC46-60366T1	212
46-60366T1	REC46-60366T1	212
46-60367A1	REC46-60367A1	212
46-70941A1	REC46-70941T01	199-215-220-221
46-70941A3	REC46-70941A3	199-211-220-221
46-73640A1	REC46-73640A1	215-222-223
46-73640A2	REC46-73640A2	212-222-223
46-77177A1	REC46-77177A1	201-215-222-223
46-77177A3	REC46-77177A3	200-212-222-223
46-77822A1	REC46-77822A1	201-213-222-223
46-812966A11	REC46-812966A11	192-213-222
46-812966A12	REC46-812966A12	192-211-219
46-812966A7	REC46-812966A7	193-215-219-222
46-821307A2	REC46-821307A2	191-215-218-219-222
46-96146A6	REC46-96146A6	215-221-225
46-96148A8	REC46-60367A1	212
46-96148A8	REC46-96148A8	202-213
46-96148T1	REC46-96148T1	202-213-223-224-225
46-99157A02	REC46-99157A02	189-213
46-99157T2	REC46-99157T2	188-211-218-221-222
47-16154 3	REC47-161543	183
47-19453Q2	REC47-19453QZ	212-222
47-19453T	REC47-19453T	193
47-42038-2	REC47-420382	187
47-42038Q3	REC47-42038Q3	187
47-42038T4	REC47-42038Q3	212
47-43026Q06	REC47-43026Q06	194-196-204
47-43026T11, T8	REC47-43026Q06	212
47-43026T2	REC47-43026Q02	194-197-205
47-85089-10	REC47-8508910	189
47-85089-3	REC47-8508910	191
47-85089Q4	REC47-85089Q4	188
47-85089T7	REC47-85089Q4	211
47-89980	REC47-89980	199
47-89980T1	REC47-89980T1	199-212-220-221
47-89981	REC47-89981	199
47-89981Q1	REC47-89981Q1	199

R.O. /OEM	REF	PAG
47-89981T2	**REC47-89981Q1**	211
47-89982T1	**REC47-89982T1**	211-221
47-89983Q1	**REC47-89983Q1**	200
47-89983T	**REC47-89983T**	201
47-89983T2	**REC47-89983Q1**	211
47-89984Q5	**REC47-89984Q5**	202
47-89984T4	**REC47-89984T4**	202
47-89984T6	**REC47-89984Q5**	212
48-13700A46	**SOL1511-153-19**	240
48-13700A46	**SOL1571-153-19**	240
48-13701A46	**SOL1512-153-19**	240
48-13701A46	**SOL1542-150-19**	240
48-13701A46	**SOL1572-153-19**	240
48-13702A46	**SOL1511-153-21**	240
48-13702A46	**SOL1571-150-21**	240
48-13703A46	**SOL1512-153-21**	240
48-13703A46	**SOL1572-150-21**	240
48-13704A46	**SOL1571-148-23**	240
48-13705A46	**SOL1572-148-23**	240
48-16986A46	**SOL1431-135-15**	239
48-16988A46	**SOL1431-133-17**	239
48-16990A46	**SOL1431-130-19**	239
48-16992A46	**SOL1431-130-21**	239
48-17312A46	**SOL1431-140-11**	239
48-17314A46	**SOL1431-138-13**	239
48-18278A46	**SOL1511-155-17**	240
48-18278A46	**SOL1571-155-17**	240
48-19636A10	**SOL1211-110-09**	239
48-19638A40	**SOL1211-105-11**	239
48-19639A40	**SOL1211-103-12**	239
48-19640A40	**SOL1211-101-13**	239
48-19642A40	**SOL1211-100-14**	239
48-19838A46	**SOL1511-158-15**	240
48-19841A46	**SOL1512-158-15**	240
48-19841A46	**SOL1542-155-15**	240
48-73140A40	**SOL1311-110-15**	239
48-77338A45	**SOL1411-140-11**	239
48-77338A45	**SOL1431-140-11**	239
48-77340A45	**SOL1411-138-13**	239
48-77340A45	**SOL1413-133-13**	239
48-77340A45	**SOL1431-138-13**	239
48-77342A45	**SOL1411-135-15**	239
48-77342A45	**SOL1413-130-15**	239
48-77342A45	**SOL1431-135-15**	239
48-77344A45	**SOL1411-133-17**	239
48-77344A45	**SOL1413-128-17**	239
48-77344A45	**SOL1431-133-17**	239
48-77346A45	**SOL1411-130-19**	239
48-77346A45	**SOL1413-125-19**	239
48-77346A45	**SOL1431-130-19**	239
48-77348A45	**SOL1411-130-21**	239
48-77348A45	**SOL1413-125-21**	239
48-77348A45	**SOL1431-130-21**	239
48-78116A45	**SOL1511-150-15**	240
48-78116A45	**SOL1513-148-15**	240
48-815083	**SOL0001-073-06P**	239
48-816702A40	**SOL1311-114-12**	239
48-816702A40	**SOL1313-108-12**	239
48-816704A40	**SOL1311-111-13**	239
48-816704A40	**SOL1313-105-13**	239
48-816706A40	**SOL1311-111-14**	239
48-816706A40	**SOL1313-105-14**	239
48-828152A12	**SOL1111-093-07**	239
48-828154A12	**SOL1111-093-08**	239
48-828156A12	**SOL1111-093-09**	239
48-828158A12	**SOL1111-093-10**	239
48-832828A45	**SOL1511-148-17**	240
48-832828A45	**SOL1513-145-17**	240
48-832830A45	**SOL1511-145-19**	240
48-832830A45	**SOL1513-143-19**	240
48-832832A45	**SOL1511-143-21**	240
48-832832A45	**SOL1513-140-21**	240
48-832834A45	**SOL1511-142-23**	240
48-834850A45	**SOL1513-145-17**	240
48-834852A45	**SOL1513-143-19**	240
48-834854A45	**SOL1513-140-21**	240
48-85632A40	**SOL1311-116-11**	239
48-85632A40	**SOL1313-111-11**	239
48-87818A11	**SOL1311-121-09**	239
48-87818A11	**SOL1313-118-09**	239
48-895180A10	**SOL5011-085-07**	239
48-895182A10	**SOL5011-085-08**	239
48-90159A46	**SOL1512-155-17**	240
48-90159A46	**SOL1572-155-17**	240
48752T	**REC48752T**	202
50-29105	**PH130-0010**	76
50-30829	**PH130-0040**	75
50-30842	**PH130-0010**	76
50-31976	**PH130-0010**	76
50-32411	**PH130-0010**	76
50-37274	**PH130-0010**	76
50-37345	**PH130-0040**	75
50-38890	**PH130-0040**	75
50-38890A1	**PH130-0040**	75
50-41583	**PH130-0072**	75
50-41583T	**PH130-0072**	75
50-44369	**PH130-0011**	75
50-44369A1	**PH130-0011**	75
50-44369A1	**PH130-0015**	76
50-44369A1	**PH130-0041**	76
50-44415	**PH130-0046**	77
50-45822	**PH130-0010**	76
50-48643	**PH130-0010**	76
50-55304A-1	**PH130-0010**	76
50-55601A	**PH130-0040**	75
50-55601A2	**PH130-0040**	75
50-57465A1	**PH130-0042**	76
50-57485	**PH130-0041**	76
50-58330	**PH130-0042**	76
50-583869	**PH130-0047**	76
50-60315	**PH130-0041**	76
50-60975	**PH130-0042**	76
50-616955-1	**PH130-0047**	76
50-65436	**PH130-0041**	76
50-66015	**PH130-0019**	76
50-66015	**PH130-0041**	76
50-66015-2	**PH130-0041**	76
50-66015T1	**PH130-0019**	76
50-673341	**PH130-0010**	76
50-72467	**PH130-0042**	76
50-73521	**PH130-0011**	75
50-73521	**PH130-0015**	76
50-73521T	**PH130-0011**	75
50-77141	**PH130-0046**	77
50-79472	**PH130-0046**	77
50-79472 1	**PH130-0046**	77
50-803835T02	**PH130-0061**	74
50-804312T1	**PH130-0055**	76
50-814980M	**PH130-0049**	75
50-814980M	**PH130-0062**	75
50-818445-2	**PH130-0023**	77
50-818445-3	**PH130-0023**	77
50-818445-5	**PH130-0023**	77
50-819085	**PH130-0047**	76
50-819085-1	**PH130-0047**	76
50-819085-T1	**PH130-0047**	76
50-819271	**PH130-0025**	76
50-819968	**PH130-0009**	77
50-819968-1	**PH130-0009**	77
50-819968-2	**PH130-0009**	77
50-819968-3	**PH130-0009**	77
50-819968-4	**PH130-0009**	77
50-819968T4	**PH130-0009**	77
50-820193	**PH130-0022**	76
50-820193-1	**PH130-0022**	76
50-820193-T1	**PH130-0022**	76
50-820193A1	**PH130-0025**	76
50-822462	**PH130-0024**	75
50-822462T1	**PH130-0024**	75
50-825991A2	**PH130-0014**	75
50-830308T	**PH130-0029**	75
50-832997 1	**PH130-0031**	77
50-832997 2	**PH130-0031**	77
50-833153	**PH130-0030**	77
50-833153-1	**PH130-0030**	77
50-833153-2	**PH130-0030**	77
50-833153-3	**PH130-0030**	77
50-833153-5	**PH130-0030**	77
50-834749	**ARC5362**	76
50-852570T	**PH130-0034**	75
50-853329T	**PH130-0066**	77
50-853329T01	**PH130-0066**	77
50-853805T03	**PH130-0006**	75
50-853869	**PH130-0009**	77
50-853869-T	**PH130-0009**	77
50-854636T	**PH130-0028**	75
50-856996T	**REC86976**	77
50-857065	**PH130-0034**	75
50-859168	**PH130-0034**	75
50-859168T	**PH130-0034**	75
50-859169T	**PH130-0029**	75
50-859170T	**PH130-0028**	75
50-859171T	**ARC5362**	76
50-859377T	**PH130-0033**	75
50-86976	**REC86976**	77
50-87788	**PH130-0010**	76
50-88119	**PH130-0041**	76
50-881368T	**PH130-0057**	76
50-881368T1	**PH130-0057**	76
50-881368T2	**PH130-0057**	76
50-884044T	**PH130-0033**	75
50-884045T	**PH130-0028**	75
50-884238T	**PH130-0046**	77
50-888151T	**PH130-0029**	75
50-888160T	**PH130-0028**	75
50-888161T	**PH130-0033**	75
50-888333T	**PH130-0074**	77
50-888333T1	**PH130-0074**	77
50-892339T	**PH130-0066**	77
50-893886T	**PH130-0029**	75
50-893888T	**PH130-0033**	75
50-893890T	**PH130-0024**	75
50-893891T	**PH130-0041**	76
50-893892T	**PH130-0066**	77
50-893897T	**PH130-0028**	75
50-897755T	**PH300-0047**	80
50-898265001	**ARC5362**	76
50-90983T1	**PH130-0021**	74
50-92669M	**PH130-0007**	76
50-96359M	**PH130-0049**	75
50-97693M	**PH130-0049**	75
50893889T	**PH130-0021**	74
5090983A1	**PH130-0021**	74
52-42389	**REC52-42389**	187
52-81644T	**REC664-45631-00**	208
52-822539T	**REC52-822539T**	195-203-208-209
52-84274M	**REC682-45631-00**	208
52-850048T	**REC52-850048T**	193-195-208-209
52-853594T	**REC52-853594T**	203-205-208-210
52-859340T	**REC52-859340T**	203-205-208-209-210
52-96313M	**REC6E5-45631-00**	208
53-11760M	**REC93440-68M03**	118-119
53-16057	**PAF15-07020005**	99-124
53-16057	**REC53-16057**	111-114-117-120-129
53-29641	**REC53-29641**	193-195-201-203
53-81264M	**REC663-11634-00**	119
53-82342M	**REC93450-13022**	113-115-116
53-82343M	**PAF15-07020005**	103
53-82345M	**PAF15-07020005**	124
53-880719	**REC53-880719**	197
53-8M0051043	**REC53-8M0051043**	197
54-816311T	**PAF8-05000025**	97
54293A10	**REC54293A10**	78
55278A4	**REC55278A4**	165-169
55278A5	**REC55278A5**	165-170
56678A1	**REC56678A1**	166-169-170
57-828507 1	**REC57-828507Q01**	69
57-828507Q4	**REC828507Q4**	69
57-835392Q	**PAF15-07000002**	69
57-880566Q14	**REC57-880566Q14**	69-237
57-892318	**REC892318**	69
57-895120	**PAF8-05000004**	98
57-895120	**PAF8-05000004**	69
57-8M0065179	**PAF25-05000023**	69
600-834961002	**PAF8-05020200**	99-127
600-834961A1	**PAF15-07020100**	103-127
611810M	**REC6F6-W0093-00**	156-159
629-803674	**REC629-803674**	117-127-129
629-8036741	**REC629-8036741**	114-127-129
629-813047T01	**REC629-813047T01**	117-127-129
629-880855	**REC629-880855**	120-127
629-9486T	**REC6F5-11651-00**	119
629-9492M	**REC6E0-11651-01**	113-116-127
63742T	**REC377139**	120
646-24251-02	**REC35-80365M**	67-233-234
64877-1	**REC648771**	178
650-825018A1	**PAF25-05020200**	109-127
65057A1	**PH375-0031**	77
652-831876A1	**PAF25-05020310**	109
68100-1	**REC681001**	203-205
681621, A5, A8	**REC96455A9**	83
68162A3	**REC96455A8**	82
68162A6	**REC96455A8**	82
700-834963	**PAF15-07020001**	103-124-127
700-834963A02	**PAF8-05020101**	99-124-127
701-8318751	**PAF25-05020301**	109
702-833098A1	**PAF25-05020101**	109
705-850026A3	**REC705-850026T1K**	125
705-850026A3	**REC705-850026T3**	129
713-856064A1	**PAF25-05020100**	109-124-127
73345A1	**REC73345A1**	191-193-201-210-232
73372A1	**REC96452A4**	82

R.O. /OEM	REF	PAG
73410A1	REC96452A4	82
75282A1	REC13191Q01	232
75692A6	REC75692A6	175-176
75692A7	REC75692A7	175
75692Q2	REC75692Q2	175-176
76039-4	REC76039-4	193-195-201
761-7982M-T	REC6E7-11631-00K	129
761-8224M	REC677-11631-00K	116
761-8225M	REC677-11635-00K	116
761-8226M	REC677-11636-00K	116
761-8256M	REC6E0-11631-00-98K	113-127
761-8484M	REC689-11631-00K	129
761-9329T	REC6F6-11631-00K	119
761-9331T	REC6F6-11636-00K	119
76214-4	TEN00835	73
76214-5	TEN00820	72
76214Q5	CM76214	197
76214Q5	CM762145	205
76214Q5	CM762145A	197-205
765-7441T32	REC765-7441T32	126-127
765-7441T36	REC765-7441T36	126-127
765-7442T32	REC765-7442T32	126-127
765-7442T36	REC765-7442T36	126-127
765-7445A12	REC765-7445A12	126-127
765-7445T11	REC765-7445T11	126-127
765-7446A11	REC765-7446A11	126-127
765-7446T12	REC765-7446T12	126-127
766-8666T41	REC766-8666741	126-127
766-8667T41	REC766-8667T41	126-127
76681A1	REC96452A4	82
767-879878T5	WI3183PS	125-129
774-9009A13	REC777-9009T13	122
774-9137A11	REC774-9137A11	122-125-129-130
777-815965A4	REC777-815965A4	125-127-129-130
777-815965A6	REC777-815965A6	125
777-9009A7	REC777-9009A7	125
777-9009T13	REC777-9009T13	125-127-129-130
779-803677	REC779-803677	117-127-129
779-803677002	REC779-803677T02	129
779-803677T02	REC779-803677T02	117
779-804886	REC779-804886	114-127-129
779-879194T01	REC779-879194T01	117-127-129
779-96152	REC779-96152	120-127-129
779-9615T	REC779-9615T	111-127-129
780-9229A7	REC780-9229A7	125-129
783-9613A1	REC783-9613A1K	129
783-9613T1	REC783-9613A1K	125-129
783-9613T3	REC783-9613T3	125-129
785-9738T9	REC785-9738T9	126-127
802706A1	REC66M-W0093-01	156-159-167-168
802733A98	POWERHEAD9.9-15	105
803061T1	REC803061T1	175-176
803702T	REC803702	89
803704T	REC803704	83
803706A3	REC3G2-06060-2	84
803739 1	PAF8-04010000	185
803740 1	PAF8-04000003	185
803741 1	PAF8-04000014	185
803745 1	PAF8-04000303	185
803748 1	PAF8-04000200	185
803750A02	PAF8-04000009	185
803751 1	PAF8-04000010	185
803752A02	PAF8-04000009	213
803753 1	PAF8-04000007	185
8037632T03	PAF8-04040001	185
803844T01	PAF8-05000300	89
804278T	REC67F-81960-12	80
804278T1	REC67F-81960-12	80
804278T11	REC67F-81960-12	80
804346T01	REC67F-W0093-00	157
804346T02	REC67F-W0093-00	157
804346T1	REC67F-W0093-00	157
80447M	REC626-14390-90	160
80450M	REC647-14385-00	160
80591M	REC648-14385-00	160
80606M	REC648-24411-00	165
806529A1	REC1463-9382	88
807929A1	REC807929A1	205-215-225
808504T1	REC66K-13915-00	68
808505T	REC899106T01	162
809088T01	REC67H-13907-00	162
809088T1	REC67H-13907-00	162
809570-1	REC809570-1	160-169
809885A2	PH200-T003	79
810749-2	REC8107492	158-172-173
810749-3	REC8107493	159-172-173
810937M	REC664-81970-62	80
810937T	REC664-81970-62	80
811618A1	REC893929A01	79
812843A1	REC893929A01	79
812887-1	REC812887002	178
812929-1	REC812929-1	193
812945 1	REC43-8129451	183
813442A1	REC893929A01	79
813442A2	REC893929A01	79
814481M	REC6E7-W0093-01	157-159
814554T01	REC6F5-12411-03	118-174-175
81490M	PH130-0007	76
815279A1-2-3	REC883072T	81
815279T-2-4-5	REC883072T	81
81579-1-2-3-4-5	REC883072T	81
816597A1	REC816597A1	231
817275A09	REC817275A09	196-213-219
817275A1	REC817275A1	197-214-225
817275A1	RM817275A1	205
817275A2	REC817275A2	194-214-219-222-223-224
817275A6	REC817275A6	204-213-225
817276-1	REC8172761	194-197-205-214-219-222-223-224-225
817397 1	REC26-8173971	120
818298A1	CM818298	69-234-235-236-237
818298A1	CM818298A	69
818349A1	REC818349T1	231
818349T1	REC818349T1	205
818763A11/T11	REC818763A10	205
818846T 6	REC646-818845T6	121-123-127-129-130
818903A1	PH200-T003	79
819479A1	PH200-T003	79
819480A1	PH200-T003	79
819762A4-A7	PH200-T003	79
81977A8-A9	PH200-T003	79
821354-2	REC8213542	191-214-218-219-222
821354A2	REC821354A2	190-211-218-219-222
821663A1	PH300-0019	80
821889A9, A22, A29, A34, A38, A40, A42, A46, A50, A51	REC821889A50	89
821896A 4	REC2704-821896A4	123
821932-1	REC8219321	187
822157T2	CM822157T2	70-191-234-235-23-237
822157T2	TEN00829AL	191
822321A 2	REC39-822321A2	123
822462T1	PH130-0024	75
822777Q1	CM822777	70
822870A1	PH200-T003	79
823034T	REC803034T	83-85
823547-1	REC8235471	191
823547A2	REC823547A2	190-227-228
823653A5/A9	PH200-T008	79
823912-1	TEN00813	72
824519-1	REC8245191	197-203-205
825045A2	PAF25-05050301	109
825212T02	PAT15-04000010	96
825231A02	REC67C-W0001-01	138
825467T02/A1	REC6G8-13440-00	68
825667T	REC6G9-85540-29	83
826134Q	CM826134	195-197-203-205-234-235-236-237
826134Q	CM826134A	195-197-203-205
826191T 4	REC2704-826191T4K	121-123-127
826398T3	PAF25-05130000	161
826729A/08	REC826729A10	79
826729A4	REC826729A10	79
826729A4/07	REC826729A10	79
826887M	CM826887M	70-107-234-235-236
826887M	TEN00831	73
827142M	REC6F5-11422-11	119
827143M	REC6F5-11432-11	119
827144M	REC6F5-11442-11	119
827509A10,T7	REC827509A10	89
827616T 1	REC493-827616T1	121-123-127
827675A1	REC827675A1	79
827682T	REC899106T01	162
827954T	REC2411-827954T2	120-127
827955A 2	REC827955A2	120
827955A2	REC827955A2	127
828151A1	REC882751A1	78
828708T	PH200-T010	79
830179-2	REC883072T	81
830179A1-2-3	REC883072T	81
830179T	REC883072T	81
830250A3-T3	PH200-T003	79
830250A6	PH200-T033	79
830271T2	PAF25-05050100	107
830272A1	PAF25-05000005	107
831255A 6	REC39-831255A6	120
832021A1-T4-A2-T2	PH200-T003	79
832734A2	PAF25-05010109	107
83282M	REC6E5-12411-02	112
83330M	TEN01166	118
83384M	REC676-45127-00	154
83386M	REC676-45128-00	154
83394M	TEN01127	118
834520T	REC854512T	82
834821T	REC854513T	83
834953T02	PAF15-07010019	101
834967A1	PAF15-07040500	103-124
834967T03	PAF8-05030300	124
834967Y03	PAF8-05030300	98
835389A2	PAF15-07140000	161
835389T02	PAF15-07140000	161
835389T1	PAF15-07140000	161
838-9002A6	REC638-9002A6	122-127
84-813706A26	REC84-813706A26	95
84-813715A1	REC15-203	95
84-813715A8	REC84-813715A8	95
84-881908T	REC84-881908T3	95
84-881908T	REC84-881908T4	95
84-99215A26	REC84-813706A26	95
84141M	REC663-24411-00	165
84262M	REC677-24411-02	164
84265M	REC677-24471-01	164
84419M	REC696-W0093-00	157
84456M	REC689-W0093-02	157-159
84473M	REC677-W0093-00	157-159
84475M	REC6H1-W0093-01-00	156-159
84732M	TEN01121	116
850026T 1	REC705-850026T1K	120
850055A2	REC850055A2	175
850315A1	REC850315A1	195
850838T01	PAF8-05030001	98
850839T01	PAF8-05030002	98
851997M	REC6F5-11412-11	119
852388A1	PAF25-05050400	109
852388T1	PAF25-05050400	124
853762T01	CM3V1-60217-0	185-233-234
853795 5	PAF8-04000004-1	185
853906A1	REC853906A1	195
853908A1	REC853908A1	195
853960T	REC853960T	82
854256 1	REC8542561	158-159
854512T	REC854512T	82
854513T	REC854513T	83
854515T1	REC883072T	81
854515T2	REC893640T01	80
854636T	PH130-0028	75
855654A1-T2	PH200-T003	79
855676A1	REC825212T02	174
855685T	PAF15-07000600	87
855713A3	REC855713A3	83
855745A12	REC854512T	82
855747A1	REC853960T	82
855748A2	REC854513T	83
855944T01	PAF8-05090000W	89
858452-1	REC81554	145
859170T	PH130-0028	75
859578A1	PAF15-07050004	96
859770-1	REC893857	193
859772-1	REC8597721	145
861155A3	REC861155A3	162
8612882-1	REC8612882-1	178
86596T	REC86596T	178
86617A2-A3-A5-A9-A11-A13-A17-A20	REC86617A20	81-85
87-17009A2	MP41070	90
87-17009A5	MP41070	90
87-18211	REC87-18211	78
87-803538	PAF15-07010100	90
87-823609A17	REC87-823609A17	90
87-88107A5	MP41000	90
87-93102M	REC6A0-82550-01	90
87-97682M	REC688-82575-01	90
87-97757M	REC6E9-82575-02	90
875285T1	PH300-0030	80
875286A1	PH300-0031	80
875286TA1	MES3164M	80
878-815013T06	PAF8-05010000	97
8782654A2	PH200-T010	79

R.O. /OEM	REF	PAG
878265A4	PH200-T010	79
878265A6	REC878265A6	79
87915QA65	TEN00843AL	74
880596T55	REC880596T55	162-163
880596T58	REC880596T58	162-163
880889T	REC63P-13907-03	162
880889T01	REC63P-13907-03	162
880890T1	REC68V-24410-00	162
881247A1	MES3164M	80
881247A1	PH300-0031	80
881248T	PH300-0030	80
881346T	REC881346T	81
881705T1	RM881705T1	162-164
882751A04	REC882751A04	78-79
882751A1	REC882751A1	78
882751A2	REC882751A1	78
883072T	REC883072T	81
883072T2	REC893640T01	80
883202A02	REC883202T02	162
883202T02	REC883202T02	162
883336T1	PAF25-05010112	107
888246T	REC69J-13907-03	162
888246T01	REC69J-13907-03	162
888251T	REC69J-24410-02	163
888251T02	REC69J-24410-02	162
888733T02	REC888733T02	162
888733T1	REC888733T02	162
888909A1	REC8M0007131	197-215-219
889246A96	REC889246A96	193
89-68258A4	PH375-0028	78
89-817109A1	PH375-0037	78
89-817109A2	PH375-0037	78
89-817109A3	PH375-0037	78
89-818864T	REC89-818864T	78
89-818997A1	PH375-0034	78
89-818999A1	PH375-0036	78
89-818999A2	PH375-0036	78
89-825096T	REC89-825096T01	77
89-825096T01	REC89-825096T01	77
89-825842A1	PH375-0036	78
89-850187T1	PH375-0034	78
89-850188A1	PH375-0036	78
89-89206-ZW7-000AH	REC91-859046Q4	180
89-96054	REC89-96054T	77
89-96158	PHSEL-239	77
89031A1	REC89031A1	166-170-171-172
89031A2	REC89031A2	166-172-173
89031A3	REC89031A3	166-170-171-172
89031A4	REC89031A4	166-173
892864T04	REC892864T04	175
892874T01	REC899106T01	162
892940T/T01	PH300-0048	80
893640T01, T1	REC893640T01	80
893887T	PH130-0028	75
893890T	PH130-0024	75
893929A01	REC893929A01	79
89594A1	REC89594A1	203

R.O. /OEM	REF	PAG
898101T67	REC898101T67	162-163
899106T01	REC899106T01	162
89949A1	CM89949	69
89949A1	CM89949A	69
8M0007943	REC8M6000359	161
8M0012083	TEN00837	73
8M0012623	REC892318	69
8M0026410	REC892318	69
8M0032837	REC8M0032837	201
8M0033984	PH130-0021	74
8M0045428	REC31-17514A2	127
8M0047313	REC3G2-06060-2	84
8M0047324	REC8M0047624	162
8M0049885	PAF25-05040000	136-142
8M0053823	REC8M0053823	197
8M0055024	PAF15-07010000	101
8M0057772	TEN00842	74
8M0060041	REC35-8M0122423	68
8M0063970	PH300-0047	80
8M0071855	REC3G2-06060-2	84
8M0080349	REC8M0080349	120-129
8M0080357	REC8M0080357	111-117-129
8M0091976	REC664-81970-62	80
8M0122423	REC35-8M0122423	68
8M6000359	REC8M6000359	161
900-835430A1	PAF15-07040000	105
900-835430T03	PAF8-05030100	98
90363A1	REC90363A1	166-173
91-12037	REC91-12037	181
91-31107T	REC91-31107T	181
91-31229	REC91-31229	180
91-31229A7	RM91-31229A7	180
91-34569A1	REC91-34569A1	180
91-36569T	REC91-36569T	180
91-43506T	REC91-43506T	181
91-56048001	REC91-56048001	181
91-56775T	REC91-56775T	181
91-60523	REC91-60523	181
91-60526T	REC91-60526T	181
91-61067A04	REC91-61067A04	181
91-61069T	REC91-61069T	181
91-61077T	REC91-61077T	181
91-821887T1	REC91-859046Q4	180
91-859046Q4	REC91-859046Q4	180
91746M	REC6E0-24435-00	165
91748M	REC6E0-24471-00	164
91753M	REC6E0-24411-00	164
92459A4	PH200-T008	79
92520M	REC6A1-W0093-01	157-159
93224A1	REC93224A1	199-213-220-221
93450-13022	REC93450-13022	125
94286T1	CM942860	70
95188T	REC6E7-85570-19	87
95218 11	PAF8-04000021	185
95368 3	PAF4-03000023	185
95405M	REC677-26301-02	161
95495M	REC677-14343-68	160
9612A 6	REC640-9612A7	120-127-129

R.O. /OEM	REF	PAG
96452A1-A4-A5	REC96452A4	82
96455A1	REC96455A8	82
96455A18	CDI134-6456-18	83
96455A4, A6, A9	REC96455A9	83
96455A8	REC96455A8	82
96455T18	CDI134-6456-18	83
97072M	PH130-0007	76
97077M	REC697-85570-00	88
97667M	REC6E9-W0093-03	157-159
98396A38	SIE18-8004	64
98396A38	SIE18-8005	64
98432Q6	CM984325	70
98432Q6	CM984325A	70
98432T6	CM984325A	189
98432T6	TEN00812	189
98450A1-A3-A5-A10	REC98450A10	82-85
99021A11	REC99021A14	82
99021A14	REC99021A14	82
99021A2, A6, K2	REC99021A6	83-86
99021A3, A5, A8, A13, A15, A16	REC99021A16	82-86
99186-1	REC826729A10	79
99186T	REC826729A10	79
99660A1	REC893929A01	79
99993M	REC6E0-41114-A1	148
CEF500301	REC47-43026Q02	218
CEF500302	REC6G1-44352-00	217-225-226
CEF500309	REC47-22748	217
CEF500310	REC47-89981	217
CEF500311G	REC47-89982	217-221
CEF500312	REC47-89983T	217
CEF500313G	REC47-89984T4	217
CEF500314	REC47-89980	217
CEF500315	REC47-8508910	218
CEF500316	REC6H3-44352-00	217-226
CEF500318	REC47-420382	218
CEF500320	REC682-44352-01	217-226
CEF500321	REC662-44352-01	217-225-226
CEF500322	REC6L5-44352-00	217
CEF500325	REC6E0-44352-00	217-225
CEF500326	REC689-44352-02	217-226
CEF500344	REC3B2-65021-1	218
CEF500377	REC47-161543	218
CEF500378	REC47-19453T	218
F747095	REC398-832074A4	81
F749095	REC398-8778A29	82
F97068-2	REC895338	174
YMM-2E227-00	LENS3227	66
YMM-2E227-00	RACS3227	66
YMM-2E227-01	LENS3227	66
YMM-2E227-01	RACS3227	66

ÍNDICE

SISTEMA ALIMENTACIÓN Y FILTRACIÓN	PÁG
BOMBAS DE COMBUSTIBLE ELÉCTRICAS Y MECÁNICAS	318
• JUNTAS VST	318
• KITS	319
• JUNTAS	319
• FILTROS	318
• KITS MEMBRANAS	319
• GUÍA KITS MEMBRANAS	320
CABLES ACELERADOR	266
CARBURADOR	316
• KITS	316
• GUÍA	317
CONECTORES	262
FILTROS ACEITE	266
FILTROS DE COMBUSTIBLE	262
• BRACKETS	262
• FILTROS Y ELEMENTOS	263
• RACORS	265
• FILTROS DE ALTA PRESIÓN	266
PASAMAMPAROS	262

SISTEMA ELÉCTRICO	PÁG
MOTORES DE ARRANQUE	273
SOLENOIDES Y RELÉS	275
• RECTIFICADORES	276
TRIM Y POWER TRIM	276
REGULADORES Y RECTIFICADORES	278
• GUÍA	279
INTERRUPTORES	289

SISTEMA DE ENCENDIDO	PÁG
MUELLES DE ARRANQUE	272
• GUÍA MUELLES DE ARRANQUE	272
• MUELLES SEGURO ARRANQUE	272
• UÑAS ARRANQUE MANUAL	273
LLAVES DE ARRANQUE	289
PLATINOS Y CONDENSADORES	290
BUJÍAS	290
CABLES PARA BUJÍAS	293
STARTOR	279
TRIGGERS	281
CAJAS NEGRAS	282
GUÍA APLICACIÓN CAJA NEGRA, STARTOR, TRIGGER	285
BOBINAS	287

SISTEMA DE REFRIGERACIÓN	PÁG
BOMBA DE AGUA	
• GUÍA AROS TÓRICOS	363
• KITS REPARACIÓN	364
• JUNTAS COLA	366
• CUERPO BOMBA	367
• TAPA BOMBA	368
• GUÍA BOMBAS	369
IMPULSORES	371
TERMOSTATOS	320
• DESPIECES	320
• TERMOSTATOS	323
• JUNTAS	323
• TAPAS Y JUNTAS	324
• TUBOS AGUA CULATA	325
• COMPONENTES CUERPO TERMOSTATO	325
• GUÍA	326

PARTES DE MOTOR	PÁG
PISTONES	293
COJINETES	296
• GUÍA	298
CIGÜEÑAL	299
• GUÍA DE RETENES	300
JUNTAS CULATA	301
• GUÍA	303
KITS JUNTAS MOTOR	304
• GUÍA	307
JUNTAS BLOQUE MOTOR	307
JUNTAS BASE MOTOR	308
JUNTAS CARTER	309
JUNTAS CUERPO DE ESCAPE INTERMEDIAS	309
RETENES CUERPO DE ESCAPE	309
JUNTAS ESCAPE	309
JUNTAS TAPA PASO AGUA BLOQUE	311
JUNTAS TAPA TRANSFERENCIA	312
JUNTAS CARBURADOR - COLECTOR ADMISIÓN	312
JUNTAS CUERPO PALOMILLA - COLECTOR	311
JUNTAS ADMISIÓN - CARBURADOR	312
JUNTAS BASE LENGÜETA	313
JUNTAS COLECTOR ADMISIÓN	313
JUNTAS SILENCIADOR	314
RETENES ACEITE	315

COLAS Y COMPONENTES	PÁG
ÁNODOS	267
COLAS	326
• GUÍA COLAS	329
• KITS REPARACIÓN	357
• KITS JUNTAS Y RETENES	358
• GUÍA KITS REPARACIÓN COLA	359
• GUÍA COJINETES	363
• GUÍA RETENES ACEITE	362
DESPIECES COLAS	330
KITS PIÑONES	350
SELECTORES	350
• GUÍA	351
EJES DE TRANSMISIÓN	352
EJES HÉLICE	353
KITS CIERRE HÉLICES	354
• GUÍA	355
HÉLICES Y GUÍA	373
HERRAMIENTAS	372
ÍNDICE REF-->R.O.	377
ÍNDICE R.O.-->REF	384

TABLE OF CONTENTS

FUEL & FILTRATION SYSTEM	PÁG
ELECTRIC & MANUAL FUEL PUMP	318
• VST GASKET	318
• KITS PUMP	319
• GASKET	319
• FILTERS	318
• DIAPHRAGMS SET	319
• DIAPHRAGMS SET APPLICATION	320
THROTLE CABLE	266
CARBURATOR	316
• KITS CARBURATOR	316
• CARBURATOR SET GUIDE	317
CONNETORS	262
OIL FILTERS	266
FUEL FILTERS	262
• BRACKETS	262
• FILTERS & ELEMENTS	263
• RACORDS	265
• FUEL FILTERS HIGH PRESSURE	266
THRU HULL	262

ELECTRIC SYSTEM	PÁG
STARTER	273
SOLENOID & RELAYS	275
• RECTIFIERS	276
TRIM & POWER TRIM	276
REGULATOR & RECTIFIERS	278
• GUIDE	279
CUT OFF SWITCHES	289

IGNITION SYSTEM	PÁG
REWIND SPRING	272
• GUIDE	272
• STARTER PAWL SPRINGS	272
• STARTER PAWL	273
IGNITION STARTER SWITCH	289
POINTS & CONDENSERS	290
SPARK PLUGS	290
SPARK PLUGS WIRES	293
STATORS	279
TRIGGERS	281
POWER PACKS	282
POWER PACKS, STARTOR, TRIGGER GUIDE	285
COILS	287

COOLING SYSTEM	PÁG
WATER PUMP	
• O-RING GUIDE	363
• WATER PUMP KITS	364
• DRIVE GASKET	366
• WATER PUMP HOUSING	367
• WATER PUMP PLATE	368
• WATER PUMP GUIDE	369
IMPELLERS	371

THERMOSTAT 320
• THERMOSTAT PARTS 320
• THERMOSTATS 323
• GASKETS 323
• COVER & GASKET 324
• HOSE WATER CYLINDER HEAD 325
• HOUSING COMPONENTS 325
• GUIDE 326

ENGINE PARTS PÁG
PISTONES 293
BEARING 296
• GUIDE 298
CRANKSHAFT 299
• OIL SEAL GUIDE 300
GASKET CYLINDER HEAD 301
• GUIDE 303
POWERHEAD GASKET SET 304
• GUIDE 307
POWERHEAD MOUNTING GASKET 307
GASKET CYLINDER 308
OIL PAN GASKET 309
INTERMEDIATE HOUSING EXHAUST GASKET 309
SEALS - EXHAUST HOUSING 309
EXHAUST GASKET 309
POWERHEAD WATER PASSAGE COVER GASKETS 311
ENGINES - POWERHEAD TRNASFER 312
CARBURETOR TO INTAKE MANIFOLD GASKETS 312
THROTTLE BODY TO MANIFOLD GASKETS 311
INTAKE TO CARBURETOR GASKETS 312
REED PLATE GASKETS 313
INTAKE MANIFOLD GASKETS 313
AIR SILENCER GASKET 314
OIL SEALS 315

UNIT DRIVES & COMPONENTS PÁG
ANODES 267
GEARCASE 326
• GUIDE 329
• GEARCASE SEAL KITS 357
• LOWER UNIT SEAL KITS 358
• GEARCASE SEAL KIT APPLICATION 357
• LOWER HOUSING BEARINGS APPLICATION 359
• OIL SEAL APPLICATION 362
GEARCASE COMPONENTS 330
PINIONS KIT 350
CLUTCH DOGS 350
• CLUTCH DOGS APPLICATIONS 351
LOWER DRIVE SHAFT 352
PROP SHAFT 353
PROP NUT KITS 354
• GUIDE 355
PROPELLERS & GUIDE 373
TOOLS 372

REF-->OEM 377
OEM-->REF 384

INDICE

SISTEMA ALIMENTAZIONE E FILTRAZIONE PÁG
POMPE COMBUSTIBILE ELETTRICA E MANUALE 318
• GUARNIZIONE VST 318
• KITS POMPA 319
• GUARNIZIONE POMPA 319
• FILTRI 318
• KIT MEMBRANE 319
• GUIDA KIT MEMBRAN 320
CAVO ACCELLERATORE 266
CARBURATORE 316
• KIT 316
• GUIDA 317
ATTACCO 262
FILTRI OLIO 266
FILTRI BENZINA 262
• SUPPORTO 262
• FILTRI & RICAMBIO 263
• RACORDO 265
• FILTRO AD ALTA PRESSIONE 266
PASSASCAFO 262

SISTEMA ELETRICO PÁG
MOTORINI AVVIAMENTO 273
SOLENOIDE E RELÉ 275
• RECTIFICATORI 276
MOTORINI TRIM E POWER TRIM 276
REGOLATORI E RADDRIZZATORI 278
• GUIDA 279
INTERRUTORI 289

SISTEMA DI ACCENSIONE PÁG
MOLLE AVVIAMENTO 272
• GUIDA 272
• MOLLE DI SICUREZZA AVVIAMENTO 272
• PIASTRA AVVIAMENTO MANUALE 273
CHIAVE DI AVVIAMENTO 289
PUNTINE E CONDENSATORE 290
CANDELE 290
CAVO PER CANDELE 293
STATORS 279
TRIGGERS 281
CENTRALINE 282
GUIDA DE CENTRALINE, STARTOR, TRIGGER 285
BOBINE 287

SISTEMA DI REFRED PÁG
POMPA ACQUA
• GUIDA KIT PARAOLIO 363
• KITS RICAMBI POMPA ACQUA 364
• GUARNIZIONE 366
• CORPO POMPA ACQUA 367
• COPERCHIO POMPA 368
• GUIDA POMPA ACQUA 369
GIRANTI 371
TERMOSTATI 320
• ESPLOSO TERMOSTATI 320
• TERMOSTATI 323
• GUARNIZIONE 323
• COPERCHIO E GUARNIZIONE 324
• TUBI ACQUA TESTATE 325
• COMPONENTI CORPO 325
• GUIDA TERMOSTATO 326

PARTI DEL MOTORE PÁG
PISTONE 293
CUSCINETTO 296
• GUIDA 298
ALBERO MOTORE 299
• GUIDA ALBERO MOTORE 300
GUARNIZIONE TESTATA 301
• GUIDA GUARNIZIONE TESTATA 303
KIT GUARNIZIONE MOTORE 304
• GUIDA 307
GUARNIZIONE BLOCCO MOTORE 307
GUARNIZIONE BASE MOTORE 308
GUARNIZIONE COPPA L'OLLIO 309
GUARNIZIONE SACRICO ED INTERMEDIE 309
PARAOLIO SEDE SCARICO 309
GUARNIZIONI SCARICO 309
GUARNIZIONI COPERCHIO PASSAGIGIO ACQUA 311
GUARNIZIONE COPERCHIO 312
GUARNIZIONE INTERMEDIA CARBURATORE - COLLETTORE ASP 312
CORPO FARFALLA COLLETTORE 311
GUARNIZIONE ASPIRAZIONE - CARBURATORE 312
GUARNIZIONE BASE LINGUETTA 313
GUARNIZIONE COLLETTORE ASPIRAZIONE 313
GUARNIZIONE MARMITTA 314
PARAOLIO 315

PIEDI E COMPONENTI PÁG
ANODI 267
PIEDI 326
• GUIDA PIEDE 329
• KIT RIPARAZIONE PIEDE 357
• KIT GUARNIZIONE E TENUTE 358
• GUIDA KIT RIPARAZIONE PIEDE 357
• GUIDA CUSCINETTI 359
• GUIDA KIT PARAOLIO 362
ESPLOSO PIEDE 330
KIT PIGNONI 350
SELETTORI 350
• GUIDA 351
ASSE TRASMISSIONE 352
ASSE ELICHE 353
KIT CHIUSURA ELICA 354
• GUIDA 355
ELICA E GUIDA 373
ATTREZZI 372

INDICE REF-->R.O. 377
INDICE R.O.-->REF 384

CONECTORES COMBUSTIBLE
FUEL FITTINGS
ATTACCHI BENZINA

PASAMAMPAROS
THRU HULL
PASSASCAFO

Ref.	R.O. OEM	Manguera Hose Tubo	Envase (x blister) Pack (x blister) Qnt (x blister)
GS31064		3/8"	1

GOLDENSHIP MADE IN THE USA



Para atravesar mamparos de hasta 12 mm. Fabricado en latón.
For bulkhead up to 12 mm. Made in machined brass.
Per attraversare paratie fino a 12 mm. Fabbricato in ottone.

CONECTOR COMBUSTIBLE
FUEL CONNECTOR
ATTACCO COMBUSTIBILE

Ref.	R.O. OEM	Rosca Thread Passo	Envase (x blister) Pack (x skinpack) Qnt (x Blister)
GS31089	5032150	3/8"	1
GS31035	5033222	5/16"	1
GS31036	5033222	3/8"	1
GS31084	174508	5/16"	1
GS31085	176445	3/8"	1

GOLDENSHIP MADE IN THE USA



GS31089, GS31084, GS31085
Motores 4 tiempos de 25 a 140 hp.
Engines 4 stroke from 25 to 140 hp.
Motori 4 tempi da 25 a 140 hp.



GS31035-GS31036
Conector pequeño. Motores 2 tiempos hasta 60 hp.
Little connector. Engines 2 stroke to 60 hp.
Attacco piccolo. Motori 2 tempi fino 60 hp.

TOMA TANQUE COMBUSTIBLE
FUEL TANKS CONNECTOR
FILETTATURA PER SERBATOIO BENZINA

Ref.	R.O. OEM	Rosca Thread Passo	Envase (x blister) Pack (x skinpack) Qnt (x Blister)
GS31021		1/4" NPT	1
GS31083	772681	1/4" NPT	1

Fabricado en latón.
Made in machined brass.
Fabbricato in ottone.

GOLDENSHIP MADE IN THE USA



GS31021



GS31083

CONECTOR DOBLE
DOUBLE CONNECTOR
ATTACCO DOPPIO

Ref.	R.O. OEM	Manguera Hose Tubo	Envase (x blister) Pack (x blister) Qnt (x blister)
GS31092		8 mm	1

GOLDENSHIP

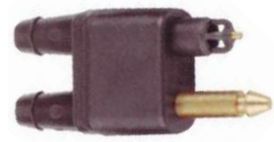

CONECTORES / CONNECTOR / ATTACCO

Ref.	Rosca Thread Passo	Envase (x blister) Pack (x skinpack) Qnt (x Blister)
GS31068	1/4" NPT	1

CODO DEPOSITO
Fabricado en latón.
TANK ELBOW
Made in machined brass.
GOMITO SERBATOIO
Fabbricato in ottone.

GOLDENSHIP MADE IN THE USA



Ref.	Rosca Thread Passo	Envase (x blister) Pack (x skinpack) Qnt (x Blister)
GS31069	1/4" NPT	1

CONECTOR T "
Para conectar dos motores a un sólo depósito, o viceversa. Fabricado en latón.
CONNECTOR T "
To connect two motors to a single deposit, or vice versa. Made in machined brass.
CONNETTORE T "
Per collegare due motori ad un solo serbatoio, o viceversa. Fabbricato in ottone.

GOLDENSHIP MADE IN THE USA



FILTROS COMBUSTIBLE Y ELEMENTOS
FUEL FILTERS AND ELEMENTS
SUPPORTI, FILTRI BENZINA E RACCORDI

BRACKET / BRACKET / SUPPORTO

Ref.	Braket Bracket Supporto	Tomas NTPF Ports Filetto
REC25000	Aluminio / Aluminium / Alluminio	1/4"
REC25010	INOX AISI316 / S.S. AISI316	1/4"
REC25020	Aluminio / Aluminium / Alluminio	3/8"
REC25030	INOX AISI316 / S.S. AISI316	3/8"
RECOBBRACKET	Plástico / Plastic / Plastica	1/4"

Con 2 tapones de bronce y 2 tubos de extensión.
(2 entradas y 2 salidas).
With 2 brass plugs and 2 extension tubes. (2 inputs & 2 outputs).
Con 2 tappi di bronzo e 2 tubi di estensione.
(2 ingressi entrata carburante e 2 uscite carburante).





REC25000 - REC25020



REC25010 - REC25030



RECOBBRACKET

FILTRO COMBUSTIBLE SEPARADOR DE AGUA
WATER SEPARATING FUEL FILTER
FILTRO SEPARATORE ACQUA-BENZINA

Ref.	Micras Micron Micras	Altura Height Altezza
REC24942	10	4-7/16"
REC35-802893Q01	10	3-3/4"
REC855686	28	4-7/16"
REC35-802893Q	25	3-3/4"
RACPFF5510	10	4-7/16"

RACOR



RACPFF5510

RECmar



REC24942



REC35-802893Q01



REC855686



REC35-802893Q

FILTRO ORIGINAL
OEM FILTER
FILTRO BENZINA ORIGINALE

Ref.	Micras Micron Micras	Altura Height Altezza
RM35-802893Q	10	3-3/4"



FILTRO CON BRACKET
FILTER WITH BRACKET
FILTRO BENZINA CON SUPPORTO

Ref.	Micras Micron Micras	Tomas NPTF Ports Filetto	Flujo Flow Flusso
REC24950	25	1/4"	50 GPH
REC24952	10	1/4"	50 GPH

Bracket de Aluminio. Con 2 tapones de bronce y 1 tubo de extensión.
Cast Aluminium Bracket. With 2 brass plugs & 1 extension tube.
Supporto in alluminio. Con 2 tappi in bronzo e 1 tubi di estensione.



FILTRO DECANTADOR COMBUSTIBLE CON VASO TRANSPARENTE
COMPLETE FUEL FILTER WITH TRANSPARENT BOWL
FILTRO DE DECANTAZIONE BENZINA COMPLETO CON VASCHETTA TRASPARENTE

Filtro Bracket Aluminio Alluminum bracket filter Filtro con Bracket in alluminio	Filtro Bracket Plástico Plastic Bracket filter Filtro con Bracket in plastica	Elemento Element Cartuccia
RAC320R-RAC-01	RAC320R-RAC-03	RACS3213
		LENS3213



Incluye soporte
Includes bracket.
Con supporto



LENS3213



RACS3213

Filtro completo Complet filter Filtro completo	Cartucho recambio Replacement element Cartuccia di ricambio	Capacidad Máx. Max. Capacity Capacità massima
RECOBFILTER	RECOBELEMENT	150 l/h

RECmar





Filtro completo Complet filter Filtro completo	Cartucho recambio Replacement element Cartuccia di ricambio	Capacidad Máx. Max. Capacity Capacità massima
REC90794-46866	REC90794-46868	117l/h

RECmar







LLAVE PARA FILTRO
FILTER KEY
CHIAVE DA FILTRO

Ref.
RECYS-225-15



Filtro completo Complet filter Filtro completo	Cartucho de recambio Replacement element Cartuccia di ricambio	Motores máximo Max. engine Motore massimo
RAC23299-10	RAC23289-10	4T 130 HP



Filtro de combustible con braket.
Complete fuel filter with braket.
Filtro combustibile con supporto.

Filtro completo Complet filter Filtro completo	Micras Micron Micras	Rosca Thread Filettatura	Capacidad Máx. Max. Capacity Capacità massima
RAC490R-RAC-01	10	3/8" NPTF	340 l/h



CON PURGADOR. Para motores fueraborda superiores a 150 HP.
WITH PRIMMING PUMP. For outboards engines more than 150 HP.
CON POMPETTA PER RIEMPIRE IL FILTRO. Per motori fuoribordo superiori a 150 hp.

Ref.	R.O. / OEM
RACS3227	99105-20005

Cartucho recambio
Replacement element
Cartuccia di ricambio





	RAC120R-RAC-01	RAC320R-RAC-01	RAC320R-INOX-01	RAC320R-RAC-02
Flujo máximo Max. flow Flusso massimo	114 lph 30 gph	340 lph 60 gph	340 lph 60 gph	340 lph 60 gph
Elemento / Element / Elemento	RACS3240 LENS3240	RACS3213	RACS3213	RACS3220UL
Cazoleta transparente (1) Clear bowl (1) Vaschetta transparente (1)	Si yes si	Si yes si	Si yes si	No
Roscas centrales Central threads Filetto centrale	M18 x 1.5	1 - 14	1 - 14	1 - 14
Tamaño rosca cabeza Head port size Dimensione vite testa	1/4-18 NPTF	1/4-18 NPTF	1/4-18 NPTF	1/4-18 NPTF
Altura x Ancho x Prof. Height x Width x Depth Altezza x Largh x Prof.	166 x 81 x 81 mm	238 x 102 x 102 mm	238 x 102 x 102 mm	238 x 102 x 102 mm
Peso / Weight / Peso	0.5 Kg	0.9 Kg	0.9 Kg	0.9 Kg
Caída de presión Pressure drop Caduta di pressione	0.15 PSI 0.01 bar	0.61 PSI 0.04 bar	0.61 PSI 0.04 bar	0.61 PSI 0.04 bar
Presión máxima (2) Max. pressure (3) Pressione massima (2)	7 PSI 0.5 bar	7 PSI 0.5 bar	7 PSI 0.5 bar	7 PSI 0.5 bar
Desmontaje cartucho-cazoleta Element removal underbowl Rimozione della cartuccia	25.4 mm 1"	25.4 mm 1"	25.4 mm 1"	25.4 mm 1"
Temp. trabajo Operating temp. Tempo lavoro	-40° C + 124° C / -40° F + 255° F			

(1) Las cazoletas transparentes sólo se recomienda para fueraborda.
Clear bowls are recommended just for outboards.
Si raccomanda l'utilizzo della vaschetta trasparente solo nei fuoribordo.

(2) Instalaciones de presión aplicables hasta el parámetro escrito.
Pressure installations are applicable up to the maximum PSI shown.
L'installazione di pressione è applicabile fino al parametro scritto.

ELEMENTOS DE RECAMBIO
ELEMENT
ELEMENTI DI RICAMBIO

Ref.	R.O. OEM	Para filtros: For filters: Per filtro:
RACS3240		RAC120R-RAC-01
RACS3227	YMM-2E227-00	Yamaha-Suzuki
RACS3213		RAC320R-RAC-01, RAC320R-RAC-01 INOX
RACS3214	0771839	Reemplaza Johnson & Evinrude
		Replaces Johnson & Evinrude
		Sostituisce Johnson & Evinrude
RACS3228UL		RAC320R-RAC-02, con/with bracket RACOR.
RACS3220UL		RAC320R-RAC-02 y RAC320R-RAC-02 INOX



RACORS
RACORS
RACCORDO

Ref.	Rosca Thread Passo	Manguera Hose Tubo	Envase (x blister) Pack (x skinpack) Qnt (x blister)
GS31065	1/4" NPT	3/8" = 9.5 mm	2
GS31166	1/4" NPT	5/16" = 7.9 mm	2
GS31155	3/8" NPT	3/8" = 9.5 mm	2
GS31156	3/8" NPT	5/16" = 7.9 mm	2
GS31157	3/8" NPT	1/4" = 6.4 mm	2

Racor 90º fabricado en latón.
Made in machined brass.
Raccordo 90° prodotto in ottone



GOLDENSHIP

Ref.	Rosca Thread Passo	Manguera Hose Tubo	Envase (x blister) Pack (x skinpack) Qnt (x blister)
GS31066	1/4" NPT	5/16" = 7.9 mm	2
GS31067	1/4" NPT	3/8" = 9.5 mm	2

Fabricado en latón.
Made in machined brass.
Prodotto in ottone



GOLDENSHIP

FILTRO COMBUSTIBLE
FUEL FILTER
FILTRO COMBUSTIBILE

Ref.	Capacidad Capacity Capacità	Manguera Hose Tubo	Envase (x blister) Pack (x skinpack) Qnt (x blister)
GS31001	50 lt/h	6-8 mm	1 x skinpack
GS31002	150 lt/h	8-10 mm	1 x skinpack

Filtro transparente para gasolina o gasoil.
Transparent plastic in line filter for petrol and diesel.
Filtro trasparente per benzina o diesel



GOLDENSHIP

Ref.	Manguera Hose Tubo	Envase (x blister) Pack (x skinpack) Qnt (x blister)
GS30435	6, 8, 10 mm	1

FILTRO TRANSPARENTE
De metal y cristal. Racors para mangueras de 6-8-10 mm.
TRANSPARENT FILTER
Clear body permits visual inspection. Racors 6-8-10 mm.
FILTRO TRASPARENTE
Di metallo e vetro. Raccordi per tubo da 6-8-10 mm.



Ref.	R.O. OEM	Ø Manguera Ø Hose ØTubo
REC40145		1/4"
REC40155		5/16"
REC40165		3/8"
REC40135	398327	5/16" Entrada / In / Entrata
	398319	3/8" Salida / Out / Uscita

De plástico / Plastic / In plastica



Ref.	R.O.
REC15410-87J30	5035974

MOTORES / ENGINES / MOTORI
J/ BJ25 HP
BJ60 / BJ70 HP
J/ BJ90 HP
J/ BJ115 HP
J/ BJ140 HP
(2005+)



Ref.	R.O.
REC15410-98500	5032238

MOTORES / ENGINES / MOTORI
E40 / E50 / E70
J4 / J5 / J6 / J10 / J15 / J40 / J50 / J60 / J70
BJ40 / BJ50 / BJ60 / BJ70
(2000+)



Ref.	R.O.
REC15410-87J10	5032323

MOTORES / ENGINES / MOTORI
E25/ E30 / E40 / E50 / E70
J30 / J40 / J50 / J60 / J70 / J90 / J115 / J140
BJ40 / BJ50 / BJ60 / BJ70 / BJ90 / BJ115 / BJ140
(2000+)



Ref.	R.O.
REC433190	433190, 765553

MOTORES / ENGINES / MOTORI
60°
V4 & V6
(1991-06)



Ref.	R.O.
REC5007335	5007326, 5005266

MOTORES / ENGINES / MOTORI
Manguera / Tube / Tubo 3/8"
E-TEC 40, 50, 60, 75, 90, 115, 150, 175, 200 DPL



KIT FILTRO COMBUSTIBLE
FUEL FILTER KIT
KIT FILTRO COMBUSTIBILE

Ref.	R.O.
REC35-49088A2	312456
REC981911	981911





REC35-49088A2







REC981911

ELEMENTO
ELEMENT
CARTUCCIA

Ref.	R.O.
REC982230	982230





FILTRO COMBUSTIBLE - CARBURADOR
FUEL FILTER - CARBURETOR
FILTRO COMBUSTIBILE - CARBURATORE

Ref.	R.O.
REC984491	984491
REC1397-2150	983870, 910139
REC35-53336	908034
REC305185	305185
REC308239	308239


REC35-53336


REC984491


REC1397-2150


REC305185


REC308239

FILTRO COMBUSTIBLE ALTA PRESIÓN
FUEL FILTER HIGH PRESSURE
FILTRO BENZINA ALTA PRESSIONE

Ref.	R.O.
REC15440-93J00	5034985

MOTORES / ENGINES / MOTORI
BJ/J200
BJ/J225
6 Cyl (2004-07)
(4 T/ 4 Strokes / 4 Tempi)



Ref.	R.O.
REC15410-87J00	5031400

MOTORES / ENGINES / MOTORI
E40/50, J40/50 / BJ40/50 (1999+)
(4 T/ 4 Strokes / 4 Tempi)



FILTROS ACEITE
OIL FILTERS
FILTRI OLIO

Ref.	R.O.
REC434839	434839

MOTORES / ENGINES / MOTORI
9.9 & 15 HP (1995-01)
70 HP (-1998)
(4 T/ 4 Strokes / 4 Tempi)



Ref.	R.O.
REC16510-05240	5033102, 7

MOTORES / ENGINES / MOTORI
9.9 - 15 HP (2002-07)
(4 T/ 4 Strokes / 4 Tempi)



Ref.	R.O.
REC16510-87J00	5031411, 778885

MOTORES / ENGINES / MOTORI
25-70 HP
(4 T/ 4 Strokes / 4 Tempi)
(1998-05)



Ref.	R.O.
REC16510-90J00	5033539, 778886

MOTORES / ENGINES / MOTORI
90-115 HP (2003+) EFI
(4 T/ 4 Strokes / 4 Tempi)



Ref.	R.O.
REC16510-82703	5033919, 778887

MOTORES / ENGINES / MOTORI
140 HP (2003+) EFI
(4 T/ 4 Strokes / 4 Tempi)



Ref.	R.O.
REC16510-93J00	5035703, 778888

MOTORES / ENGINES / MOTORI
200-225 HP (2004+)
(4 T/ 4 Strokes / 4 Tempi)





CABLE ACELERADOR
THROTTLE CABLE
CAVO ACCELERATORE

Ref.	R.O.	HP	AÑO YEAR ANNO
REC0397004	397004	6, 8	1968-90
REC0433325	433325	8	Todos / All / Tutti
REC0395911	395911	10	1968-90
REC0355911	355911	15	-1988
REC0435230	435230	15	1989+
REC0500581	500581, 396161	20, 25, 30	1986+
REC0398243	398243	25	1989+
REC0439542	439542	35	Todos / All / Tutti



ÁNODOS
ANODES
ANODI

Ref.	R.O. OEM		Peso Weight Peso
CM123009	123009, 173029	Cinc / Zinc / Zinco	0,09 kg
CM123009A		Aluminio / Aluminium / Alluminio	0,03 kg



Ref.	R.O. OEM		Peso Weight Peso
CM327606	327606	Cinc / Zinc / Zinco	0,08 kg
CM327606A		Aluminio / Aluminium / Alluminio	0,03 kg



Ref.	R.O. OEM		Peso Weight Peso
CM334451	334451, 432397	Cinc / Zinc / Zinco	0,09 kg
CM334451A		Aluminio / Aluminium / Alluminio	0,03 kg



Ref.	R.O. OEM		Peso Weight Peso
CM976669	976669	Cinc / Zinc / Zinco	0,43 kg
CM976669A		Aluminio / Aluminium / Alluminio	0,17 kg



Ref.	R.O. OEM		Peso Weight Peso
CM389999	389999	Cinc / Zinc / Zinco	0,23 kg
CM389999A		Aluminio / Aluminium / Alluminio	0,09 kg



Ref.	R.O. OEM		Peso Weight Peso
CM392123	392123	Cinc / Zinc / Zinco	0,76 kg
CM392123A		Aluminio / Aluminium / Alluminio	0,29 kg



Ref.	R.O. OEM		Peso Weight Peso
CM397768	397768	Cinc / Zinc / Zinco	0,31 kg
CM397768A		Aluminio / Aluminium / Alluminio	0,12 kg



Ref.	R.O. OEM		Peso Weight Peso
CM392462	392462	Cinc / Zinc / Zinco	0,65 kg
CM392462A		Aluminio / Aluminium / Alluminio	0,25 kg



Ref.	R.O. OEM		Peso Weight Peso
CM393023	393023	Cinc / Zinc / Zinco	0,22 kg
CM393023A		Aluminio / Aluminium / Alluminio	0,09 kg



Ref.	R.O. OEM		Peso Weight Peso
CM433458	433458	Cinc / Zinc / Zinco	0,33 kg
CM398331A	398331	Aluminio / Aluminium / Alluminio	0,13 kg

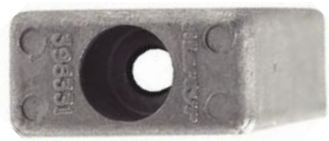

Ref.	R.O. OEM		Peso Weight Peso
CM398873	398873	Cinc / Zinc / Zinco	0,15 kg
CM398873A		Aluminio / Aluminium / Alluminio	0,06 kg



Ref.	R.O. OEM		Peso Weight Peso
CM431708	431708	Cinc / Zinc / Zinco	0,27 kg
CM431708A		Aluminio / Aluminium / Alluminio	0,10 kg



Ref.	R.O. OEM		Peso Weight Peso
CM5031705	5031705	Cinc / Zinc / Zinco	0,02 kg

MOTORES / ENGINES / MOTORI
Ánodo Fuerabordas
Outboards anode
Anodo Fuoribordo

8 HP



Ref.	R.O. OEM		Peso Weight Peso
CM5007089	433580	Cinc / Zinc / Zinco	0,72 kg
CM433580A		Aluminio / Aluminium / Alluminio	0,28 kg



Ref.	R.O. OEM		Peso Weight Peso
CM5007089	5007089	Cinc / Zinc / Zinco	0,83 kg
CM5007089A		Aluminio / Aluminium / Alluminio	0,32 kg



Ref.	R.O. OEM		Peso Weight Peso
CM980756	980756	Cinc / Zinc / Zinco	0,96 kg
CM980756A		Aluminio / Aluminium / Alluminio	0,37 kg



Ref.	R.O. OEM		Peso Weight Peso
CM55321-87J00	5031705	Cinc / Zinc / Zinco	0,02 kg



Ref.	R.O. OEM		Peso Weight Peso
CM55125-95500	5031536	Cinc / Zinc / Zinco	0,16 kg

MOTORES / ENGINES / MOTORI
Ánodo Fuerabordas
Outboards anode
Anodo Fuoribordo

70 HP
(4 Tiempos / 4 Stroke / 4 Tempi)



Ref.	R.O. OEM		Peso Weight Peso
CM55320-98600	5030267	Cinc / Zinc / Zinco	0,10 kg

MOTORES / ENGINES / MOTORI
Ánodo Fuerabordas
Outboards anode
Anodo Fuoribordo

5 HP

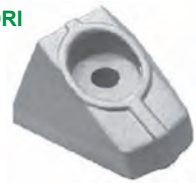

Ref.	R.O. OEM		Peso Weight Peso
CM338635	338635	Cinc / Zinc / Zinco	0,06 kg

MOTORES / ENGINES / MOTORI
Ánodo Fuerabordas
Outboards anode
Anodo Fuoribordo

9,9 HP 15 CV



Ref.	R.O. OEM		Peso Weight Peso
CM984547	983952	Cinc / Zinc / Zinco	1,10 kg
CM983952A		Aluminio / Aluminium / Alluminio	0,43 kg



Ref.	R.O. OEM		Peso Weight Peso
CM55321-93900	5033185	Cinc / Zinc / Zinco	0,06 kg

MOTORES / ENGINES / MOTORI
Ánodo Fuerabordas
Outboards anode
Anodo Fuoribordo

9,9 - 15 HP



Ref.	R.O. OEM		Peso Weight Peso
CM5033167	5033167	Cinc / Zinc / Zinco	0,05 kg

MOTORES / ENGINES / MOTORI
Ánodo Fuerabordas
Outboards anode
Anodo Fuoribordo

9,9 - 15 HP



Ref.	R.O. OEM		Peso Weight Peso
CM5032930	5032930	Cinc / Zinc / Zinco	0,09 kg

MOTORES / ENGINES / MOTORI
Ánodo Fuerabordas
Outboards anode
Anodo Fuoribordo

90 - 115 HP



Ref.	R.O. OEM		Peso Weight Peso
CM5031538	5031538	Cinc / Zinc / Zinco	0,08 kg

MOTORES / ENGINES / MOTORI
Ánodo Fuerabordas
Outboards anode
Anodo Fuoribordo

2 - 8 HP



Ref.	R.O. OEM		Peso Weight Peso
CM434029	434029	Cinc / Zinc / Zinco	0,19 kg

MOTORES / ENGINES / MOTORI
Ánodo Fuerabordas
Outboards anode
Anodo Fuoribordo

20 - 25 HP



Ref.	R.O. OEM		Peso Weight Peso
CM5032929	5032929	Cinc / Zinc / Zinco	0,25 kg

MOTORES / ENGINES / MOTORI
Ánodo Fuerabordas
Outboards anode
Anodo Fuoribordo

60, 70, 90, 115, 140 HP (2002-06)



Ref.	R.O. OEM		Peso Weight Peso
CM982438	982277, 982438	Cinc / Zinc / Zinco	0,85 kg

MOTORES / ENGINES / MOTORI
OMC-G 100-245 HP



Ref.	R.O. OEM		Peso Weight Peso
CM983494	983494	Cinc / Zinc / Zinco	0,82 kg
CM983494A		Aluminio / Aluminium / Alluminio	0,32 kg

MOTORES / ENGINES / MOTORI
OMC



Ref.	R.O. OEM		Peso Weight Peso
CM984513	984513	Cinc / Zinc / Zinco	0,97 kg
CM984513A		Aluminio / Aluminium / Alluminio	0,38 kg

MOTORES / ENGINES / MOTORI
OMC



Ref.	R.O. OEM		Peso Weight Peso
CM984547	984547	Cinc / Zinc / Zinco	0,91 kg
CM984547A		Aluminio / Aluminium / Alluminio	0,35 kg

MOTORES / ENGINES / MOTORI
OMC



Ref.	R.O. OEM		Peso Weight Peso
CM338742	338742	Cinc / Zinc / Zinco	0,40 kg

MOTORES / ENGINES / MOTORI
Ánodo Intra-Fuerabordas
Inboards-Outboards anode
Anodo Entrobordo-Fuoribordo

OMC



Ref.	R.O. OEM		Peso Weight Peso
CMOMC5075KITA		Aluminio / Aluminium / Alluminio	0,52 kg

MOTORES / ENGINES / MOTORI
OMC 50-75 HP

NEW



Ref.	R.O. OEM		Peso Weight Peso
CMOMCV4V6KITA		Aluminio / Aluminium / Alluminio	0,55 kg

MOTORES / ENGINES / MOTORI
OMC V4-V6

NEW



Ref.	R.O. OEM		Peso Weight Peso
TEN00920	987067	Cinc / Zinc / Zinco	0,72 kg

MOTORES / ENGINES / MOTORI
OMC 5700



Ref.	R.O. OEM		Peso Weight Peso
TEN00900	976669	Cinc / Zinc / Zinco	0,470 kg

MOTORES / ENGINES / MOTORI
OMC P



Ref.	R.O. OEM		Peso Weight Peso
TEN00901	982277	Cinc / Zinc / Zinco	0,580 kg

MOTORES / ENGINES / MOTORI
OMC M
100 - 245 HP



Ref.	R.O. OEM		Peso Weight Peso
TEN00902	385818, 982438	Cinc / Zinc / Zinco	0,970 kg

MOTORES / ENGINES / MOTORI
OMC G
100 - 245 HP



Ref.	R.O. OEM		Peso Weight Peso
TEN00903	3853818, 984513	Cinc / Zinc / Zinco	0,980 kg

MOTORES / ENGINES / MOTORI
OMC COBRA



Ref.	R.O. OEM		Peso Weight Peso
TEN00904	983952	Cinc / Zinc / Zinco	1,290 kg

MOTORES / ENGINES / MOTORI
OMC COBRA
130 - 185 HP



Ref.	R.O. OEM		Peso Weight Peso
TEN00929	389999	Cinc / Zinc / Zinco	0,190 kg

MOTORES / ENGINES / MOTORI
OMC Sail Drive



Ref.	R.O. OEM		Peso Weight Peso
TEN00906	983494	Cinc / Zinc / Zinco	0,730 kg

MOTORES / ENGINES / MOTORI
OMC



Ref.	R.O. OEM		Peso Weight Peso
TEN00919	986158, 3853930	Cinc / Zinc / Zinco	0,610 kg

MOTORES / ENGINES / MOTORI
OMC Cobra



Ref.	R.O. OEM		Peso Weight Peso
TEN00920	3854061, 987067	Cinc / Zinc / Zinco	0,980 kg

MOTORES / ENGINES / MOTORI
OMC Cobra 5700



Ref.	R.O. OEM		Peso Weight Peso
TEN00922	3854130	Cinc / Zinc / Zinco	1,000 kg

MOTORES / ENGINES / MOTORI
OMC King Cobra



Ref.	R.O. OEM		Peso Weight Peso
TEN00916	984547	Cinc / Zinc / Zinco	0,800 kg

MOTORES / ENGINES / MOTORI
OMC



Ref.	R.O. OEM		Peso Weight Peso
TEN00930	5030265, 5035786	Cinc / Zinc / Zinco	0,080 kg

MOTORES / ENGINES / MOTORI
OMC
JOHNSON / EVINRUDE

40 - 40/50 HP
(4Tiempos / 4 Strokes / 4 Tempi)



Ref.	R.O. OEM		Peso Weight Peso
TEN00917	431708	Cinc / Zinc / Zinco	0,300 kg

MOTORES / ENGINES / MOTORI
OMC
JOHNSON / EVINRUDE Diabolo 70 - 120 HP



Ref.	R.O. OEM		Peso Weight Peso
TEN00923		Cinc / Zinc / Zinco	0,540 kg

MOTORES / ENGINES / MOTORI
OMC
JOHNSON / EVINRUDE
225 HP



Ref.	R.O. OEM		Peso Weight Peso
TEN00908	392123	Cinc / Zinc / Zinco	0,820 kg

MOTORES / ENGINES / MOTORI
OMC 90 - 140 HP
JOHNSON / EVINRUDE 90 - 140 HP



Ref.	R.O. OEM		Peso Weight Peso
TEN00925	5031705	Cinc / Zinc / Zinco	0,020 kg

MOTORES / ENGINES / MOTORI
OMC
JOHNSON / EVINRUDE



Ref.	R.O. OEM		Peso Weight Peso
TEN00907	393023, 436745	Cinc / Zinc / Zinco	0,250 kg

MOTORES / ENGINES / MOTORI
OMC 50, 60, 70, 90, 140 HP
JOHNSON / EVINRUDE 50, 115, 120, 140, 200 HP



Ref.	R.O. OEM		Peso Weight Peso
TEN00911	395780	Cinc / Zinc / Zinco	0,190 kg

MOTORES / ENGINES / MOTORI
OMC Cobra
JOHNSON / EVINRUDE



Ref.	R.O. OEM		Peso Weight Peso
TEN00928	397768	Cinc / Zinc / Zinco	0,250 kg
TEN00928AL		Aluminio / Aluminium / Alluminio	0,100 kg

MOTORES / ENGINES / MOTORI
OMC
JOHNSON / EVINRUDE



Ref.	R.O. OEM		Peso Weight Peso
TEN00918	5007089, 433580	Cinc / Zinc / Zinco	0,720 kg

MOTORES / ENGINES / MOTORI
JOHNSON / EVINRUDE
60 - 300 HP



Ref.	R.O. OEM		Peso Weight Peso
TEN00913	432397, 334451	Cinc / Zinc / Zinco	0,080 kg

MOTORES / ENGINES / MOTORI
JOHNSON / EVINRUDE
4 - 7,5 HP



Ref.	R.O. OEM		Peso Weight Peso
TEN00921	338635	Cinc / Zinc / Zinco	0,830 kg

MOTORES / ENGINES / MOTORI
JOHNSON 8, 9.9, 15 HP



Ref.	R.O. OEM		Peso Weight Peso
TEN00914	434029	Cinc / Zinc / Zinco	0,119 kg

MOTORES / ENGINES / MOTORI
JOHNSON / EVINRUDE
20 - 25 HP

Sin tornillo / Without screw / Senza vite



Ref.	R.O. OEM		Peso Weight Peso
TEN00914/1	434029	Cinc / Zinc / Zinco	0,200kg

MOTORES / ENGINES / MOTORI
JOHNSON / EVINRUDE
20 - 25 HP

Con tornillo / With screw / Con vite



Ref.	R.O. OEM		Peso Weight Peso
TEN00910	398331, 433458	Cinc / Zinc / Zinco	0,330 kg

MOTORES / ENGINES / MOTORI
JOHNSON / EVINRUDE
160 - 280 HP, V4 , V6



Ref.	R.O. OEM		Peso Weight Peso
TEN00909	392462	Cinc / Zinc / Zinco	0,700 kg

MOTORES / ENGINES / MOTORI
OMC 50 - 75 HP
JOHNSON / EVINRUDE 50 - 75 HP



Ref.	R.O. OEM		Peso Weight Peso
TEN00933	5031705	Cinc / Zinc / Zinco	0,020 kg

MOTORES / ENGINES / MOTORI
JOHNSON / EVINRUDE 3.5, 5, 6 HP
(4 Tiempos / 4 Strokes / 4 Tempi)



Ref.	R.O. OEM		Peso Weight Peso
TEN00935	5031538	Cinc / Zinc / Zinco	0,080 kg

MOTORES / ENGINES / MOTORI
JOHNSON / EVINRUDE 10 - 15 HP
(4 Tiempos / 4 Strokes / 4 Tempi)



Ref.	R.O. OEM		Peso Weight Peso
TEN00936	5033167	Cinc / Zinc / Zinco	0,050 kg

MOTORES / ENGINES / MOTORI
JOHNSON / EVINRUDE



Ref.	R.O. OEM		Peso Weight Peso
TEN00932	5030267	Cinc / Zinc / Zinco	0,100 kg

MOTORES / ENGINES / MOTORI
JOHNSON / EVINRUDE HPS



Ref.	R.O. OEM		Peso Weight Peso
TEN00937	5032930	Cinc / Zinc / Zinco	0,100 kg

MOTORES / ENGINES / MOTORI
JOHNSON / EVINRUDE 140 HP



Ref.	R.O. OEM		Peso Weight Peso
TEN00934	5033185	Cinc / Zinc / Zinco	0,050 kg

MOTORES / ENGINES / MOTORI
JOHNSON / EVINRUDE 9.9 - 15 HP
(4 Tiempos / 4 Strokes / 4 Tempi)

TECNOSEAL save your dreams



Ref.	R.O. OEM		Peso Weight Peso
TEN00931	5031536	Cinc / Zinc / Zinco	0,190 kg

MOTORES / ENGINES / MOTORI
JOHNSON / EVINRUDE 70 HP
(4 Tiempos / 4 Strokes / 4 Tempi)

TECNOSEAL save your dreams



Ref.	R.O. OEM		Peso Weight Peso
TEN00905	338742	Cinc / Zinc / Zinco	0,440 kg

MOTORES / ENGINES / MOTORI
OMC 55 HP

TECNOSEAL save your dreams



Ref.	R.O. OEM		Peso Weight Peso
TEN00915	398873	Cinc / Zinc / Zinco	0,160 kg

MOTORES / ENGINES / MOTORI
JOHNSON 737

TECNOSEAL save your dreams



Ref.	R.O. OEM		Peso Weight Peso
TEN00926	5034616, 5030907	Cinc / Zinc / Zinco	0,510 kg

MOTORES / ENGINES / MOTORI
EVINRUDE 40 - 70 HP
(4 Tiempos / 4 Strokes / 4 Tempi)

TECNOSEAL save your dreams



Ref.	R.O. OEM		Peso Weight Peso
TEN00927	5032929	Cinc / Zinc / Zinco	0,250 kg

MOTORES / ENGINES / MOTORI
EVINRUDE 70 HP
(4 Tiempos / 4 Strokes / 4 Tempi)

TECNOSEAL save your dreams



Ref.	R.O. OEM		Peso Weight Peso
TEN00912	173029, 123009	Cinc / Zinc / Zinco	0,080 kg
	327606		

MOTORES / ENGINES / MOTORI
JOHNSON 2 - 150 HP

TECNOSEAL save your dreams



MUELLES ARRANQUE
REWIND SPRINGS
MOLLE AVVIAMENTO

Ref.	R.O.
REC93-08668	395460
REC0326877	326877
REC93-06511	312932
REC93-06522	323653, 338534



GUIA MUELLES ARRANQUE
REWIND SPRINGS GUIDE
GUIDA MOLLE AVVIAMENTO

HP	AÑO YEAR ANNO	REF.
2	1969-80	REC93-06511
3	1954-68	REC93-08668
4	1969-92	REC93-06511
4	1969-80	REC93-06511
4	1981-92	REC0326877
4.5	1980-90	REC93-06511
5.5	1954-68	REC93-08668
7.5	1954-68	REC93-08668
9.9	1980-92	REC93-06522
10	1980-92	REC93-06522
10	1950-63	REC93-08668
12	1980-92	REC93-06522
12	1956-68	REC93-08668
15	1979-92	REC93-06522
15	1956-68	REC93-08668
18	1956-68	REC93-08668
20	1956-92	REC93-08668
28	1969-92	REC93-08668
25/30	1969-92	REC93-08668
35	1969-92	REC93-08668

MUELLES SEGURO ARRANQUE
STARTER PAWL SPRINGS
MOLLE DI SICUREZZA AVVIAMENTO

Ref.	R.O.
REC93-08663	203697

MOTORES / ENGINES / MOTORI
20, 25, 30, 35 HP (1968-84)



Ref.	R.O.
REC93-08664	203725

MOTORES / ENGINES / MOTORI
25, 30, 35 HP (1968-84)



Ref.	R.O.
REC93-08665	330527

MOTORES / ENGINES / MOTORI
20, 25 HP (1985-97)



Ref.	R.O.
REC93-08666	331970

MOTORES / ENGINES / MOTORI
3, 4, 5, 6, 8, 10, 15, 25, 35 HP
(1993-97)



Ref.	R.O.
REC93-08667	335905

MOTORES / ENGINES / MOTORI
5, 6, 8, 10, 15, 25, 35 HP (1993-97)



UÑAS ARRANQUE MANUAL
STARTER PAWL
PIASTRA AVVIAMENTO MANUALE

Ref.	R.O.
REC300-01744	203698
REC300-01633	330525



HP	AÑO YEAR ANNO	REF.
2	1971-88	**REC300-01744**
JR / COLT	1990	**REC300-01744**
3	1957-67	**REC300-01744**
4	1978-90	**REC300-01744**
5.5	1957-64	**REC300-01744**
7.5	1957-76	**REC300-01744**
10	1957-62	**REC300-01744**
18	1957-73	**REC300-01744**
20	1981-90	**REC300-01633**
25	1969-76	**REC300-01744**
25	1977	**REC300-01744**
25	1978-90	**REC300-01633**
25C	1982-90	**REC300-01633**
30	1957-61	**REC300-01633**
30	1984-90	**REC300-01633**
35	1976-77	**REC300-01744**
35	1978-90	**REC300-01633**
45	1958-59	**REC300-01744**
50	1958-89	**REC300-01744**
60	1964-66	**REC300-01744**
75	1960-65	**REC300-01744**
80	1966	**REC300-01744**

MOTORES DE ARRANQUE
STARTERS
MOTORINI AVVIAMENTO

Ref.	R.O.	Tiempos Strokes Tempi	Dientes Tooth Denti
PH130-0061	5040343	4	10

MOTORES / ENGINES / MOTORI
(2012+)
E10 / B10



Ref.	R.O.	Tiempos Strokes Tempi	Dientes Tooth Denti
PH130-0013	584608, 586275	4	10

MOTORES / ENGINES / MOTORI
L / E/ BE 10
E / BE 15
J / BJ 10
J / BJ 15
(1995-04)
9.9 - 15 HP (305 cc)



Ref.	R.O.	Tiempos Strokes Tempi	Dientes Tooth Denti
PH130-0006	5040786	4	9

MOTORES / ENGINES / MOTORI
E15 / B15 (2012+)



Ref.	R.O.	Tiempos Strokes Tempi	Dientes Tooth Denti
PH130-0077	5036972	4	9

MOTORES / ENGINES / MOTORI
J25 / BJ25 (2006-11)



Ref.	R.O.	Tiempos Strokes Tempi	Dientes Tooth Denti
PH130-0038	386591, 392133, 585061, 586278, 277432, 278232, 378674, 379091, 379818, 380139, 380238, 381864, 385401, 386597	2	11

MOTORES / ENGINES / MOTORI
E20 / 25 / 28 / E30 / E35
HE25
BE20 / BE25
BJ25 / BJ30
J25 / 30 / 28 / 35
TJ25
SJ25, 30
TE25
VE25
VJ25 / VJ28
(1976-05)



Ref.	R.O.	Tiempos Strokes Tempi	Dientes Tooth Denti
PH130-0078	5035078	4	9

MOTORES / ENGINES / MOTORI
J200/ BJ200
J225 / BJ225
(2004-06)



Ref.	R.O.	Tiempos Strokes Tempi	Dientes Tooth Denti
PH130-0071	5033799	4	9

MOTORES / ENGINES / MOTORI
J90 / BJ90
J115 / BJ115
J140 / BJ140
(2003-06)



Ref.	R.O.	Tiempos Strokes Tempi	Dientes Tooth Denti
PH130-0014	386430, 586276	2 & 4	10

MOTORES / ENGINES / MOTORI
8 HP (1996-98)
8 - 15 HP (1974-92)



Ref.	R.O.	Tiempos Strokes Tempi	Dientes Tooth Denti
PH130-0035	586768, 587045	2	9

MOTORES / ENGINES / MOTORI
E15 / 25 / 30 / 40 / 50 / 55 / 60 / 65 / 75 / 90 (2001+)
E-TEC



Ref.	R.O.	Tiempos Strokes Tempi	Dientes Tooth Denti
PH130-0017	583473, 585059, 778991	2	9

MOTORES / ENGINES / MOTORI
E20 / 25 / 28 / 30
VE25 / 28 / 30
TE25 / TE30
J20 / 25 / 30 / 35
TJ25
VJ25 / 28 / 30 / 35
(1988-93)



Ref.	R.O.	Tiempos Strokes Tempi	Dientes Tooth Denti
PH130-0026	586277, 584818, 778996	2	10

MOTORES / ENGINES / MOTORI
BE25 / 35
BJ25, 35
HE35
HJ35
E25 /35
J25 / 35
(1996+)



Ref.	R.O.	Tiempos Strokes Tempi	Dientes Tooth Denti
PH130-0016	583482, 585056, 586279	2	9

MOTORES / ENGINES / MOTORI
E40 / 48 / 50
TE40 / 50
VE40/ 48 / 50
J40 / 48 / 50
TJ40 / 50
VJ40 / 48 / 50
E40 / 48 / 50
BE40 / 50
HE40
SE50
HJ40
BJ40 / 50
RJ50
X50
(1989-05)



Ref.	R.O.	Tiempos Strokes Tempi	Dientes Tooth Denti
PH130-0045	384163, 387684, 389275, 585063, 586280, 778993	2	9

MOTORES / ENGINES / MOTORI
40 - 60 HP (2cyl)
(1971-99)



Ref.	R.O.	Tiempos Strokes Tempi	Dientes Tooth Denti
PH130-0043	383691, 384777, 386657, 391735, 585058, 585197, 586281	2	9

MOTORES / ENGINES / MOTORI
55 - 75 HP (3 cyl)
E70/ 75
BE50 / 60 / 70
J70 / 75 / 65 / 60
TJ60 / 70
VJ60 / 70
E 60 /65 / 70
BJ 60 / 70
(1971-04)



Ref.	R.O.	Tiempos Strokes Tempi	Dientes Tooth Denti
PH130-0079	5030780	2	8

MOTORES / ENGINES / MOTORI
E70 / B70 (1998-00)



Ref.	R.O.	Tiempos Strokes Tempi	Dientes Tooth Denti
PH130-0044	385529, 389954, 585057, 585196, 586282, 586283, 386465, 389380, 391554, 585051	2	10

MOTORES / ENGINES / MOTORI
80 - 140 HP
(1973-98)
V4 CROSS



Ref.	R.O.	Tiempos Strokes Tempi	Dientes Tooth Denti
PH130-0032	438878, 586257	2	

MOTORES / ENGINES / MOTORI
75 - 175 HP (1991+)
V4 & V6 Ficht



Ref.	R.O.	Tiempos Strokes Tempi	Dientes Tooth Denti
PH130-0027	584980, 586284	2	

MOTORES / ENGINES / MOTORI
100 Comercial 1997, 80 Jet 1998
E90 / J90 / BJ90 / BE90
E115
BE115
HE115
L115
J115
BJ115
SJ115
(1995-06)
V4



Ref.	R.O.	Tiempos Strokes Tempi	Dientes Tooth Denti
PH130-0012	393570, 585060, 586285, 778994	2	10

MOTORES / ENGINES / MOTORI
120 - 140 HP (1985+)



Ref.	R.O.	Tiempos Strokes Tempi	Dientes Tooth Denti
PH130-0018	432925, 586286, 586287	2	

MOTORES / ENGINES / MOTORI
150 - 175 HP V6 Eagle
(1991+)



Ref.	R.O.	Tiempos Strokes Tempi	Dientes Tooth Denti
PH130-0008	391511, 397023, 396235, 584799, 586890, 384799, 586289, 586411, 586731, 586897, 586957	2	10

MOTORES / ENGINES / MOTORI
V6 - V8 (115 - 300 HP)
(1985+)
Looper



Ref.	R.O.	Tiempos Strokes Tempi	Dientes Tooth Denti
PH130-0039	387094, 395207, 585062, 586288, 778992, 777693	2	8

MOTORES / ENGINES / MOTORI
150 - 235 HP
V6 Cross



SOLENOIDES Y RELÉS
SOLENOID AND RELAYS
SOLENOIDI E RELÉ

Ref.	R.O. OEM	Volts	Terminales Terminals Terminali
PH375-0029	985063, 892187, 98410 778025, 584128	12	3

MOTORES / ENGINES / MOTORI
(1987+)



Ref.	R.O. OEM	Volts	Terminales Terminals Terminali
REC584580	584580	12	4

MOTORES / ENGINES / MOTORI
9.9 / 15 HP (4 Tiempos / 4 Stroke / 4 tempi)
(1995-01)
8 HP (1996-98)
9.9 / 15 HP (1993+)

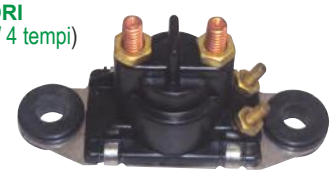

Ref.	R.O. OEM	Volts	Terminales Terminals Terminali
PH375-0027	586730, 586842, 778209, 980801, 981703, 982189, 985064, 385389	12	4

MOTORES / ENGINES / MOTORI
75 - 250 HP (1997+)



Ref.	R.O. OEM	Volts	Terminales Terminals Terminali
REC89-825096T01	5030783		4

MOTORES / ENGINES / MOTORI
9.9 - 70 HP
(1998+)



Ref.	R.O. OEM	Volts	Terminales Terminals Terminali
PH375-0033	172869, 581528, 777699	12	4

MOTORES / ENGINES / MOTORI
9.9 - 235 HP
(1975-92)



Ref.	R.O. OEM	Volts	Terminales Terminals Terminali
REC378444	378444, 777700	12	4

MOTORES / ENGINES / MOTORI
18 - 80 HP
(1966-85)





Ref.	R.O. OEM	Volts	Terminales Terminals Terminali
PH375-0030	979774, 778021	12	3

MOTORES / ENGINES / MOTORI
(1972-77)



Ref.	R.O. OEM	Volts	Terminales Terminals Terminali
PH375-0012	582708, 395419, 380095 383622, 389398, 389493 586180	12	4

MOTORES / ENGINES / MOTORI
20 - 300 HP
(1992+)



Ref.	R.O. OEM	Volts	Terminales Terminals Terminali
REC586774	586774, 5009214	12	4

MOTORES / ENGINES / MOTORI
25 - 300 HP
(2004+)
E-Tec



Ref.	R.O. OEM	Volts	Terminales Terminals Terminali
REC3857533	584416, 581295, 582472, 582473, 586147, 586224 777702	12	

MOTORES / ENGINES / MOTORI
40 - 300 HP
(1991+)



RELÉ TRIM
SOLENOID TRIM
SOLENOIDE TRIM

Ref.	R.O. OEM	Volts	Terminales Terminals Terminali
REC581528	581528, 172869, 777699	12	4

MOTORES / ENGINES / MOTORI
9.9 - 235 HP
(1977-92)



Ref.	R.O. OEM	Volts	Terminales Terminals Terminali
PH375-0048	5032197	12	3

MOTORES / ENGINES / MOTORI
E25 / E30
(2000+)



Ref.	R.O. OEM	Volts	Terminales Terminals Terminali
PH375-0047	5031483, 5032195	12	3

MOTORES / ENGINES / MOTORI
25 - 115 HP
(1999+)



RECTIFICADORES
RECTIFIERS
RECTIFICATORI

Ref.	R.O.	Amp
PH350-0002	581778	4-5
PH350-0001	583408, 582399	6-10



PH350-0002



PH350-0001

HP	AÑO YEAR ANNO	REF.
9.9, 15	1974-92	**PH350-0002**
20 (D)	1989-92	**PH350-0002**
25	1977-92	**PH350-0002**
28	1989-92	**PH350-0002**
30 (D)	1989-92	**PH350-0002**
35	1976-88	**PH350-0002**
40	1974-76	**PH350-0002**
40	1988-92	**PH350-0002**
45	1989-92 COMM	**PH350-0002**
45SS	1989-90	**PH350-0002**
48	1989-92	**PH350-0002**
50	1971-75	**PH350-0001**
55	1976-77	**PH350-0001**
55(A)	1978-81	**PH350-0002**
55(A)	1980-92	**PH350-0002**
60	1970(E), 71	**PH350-0001**
60	1980-88	**PH350-0001**
60(F)	1989-91	**PH350-0001**
SST60	1989-90	**PH350-0001**
65	1972-73	**PH350-0001**
65	1988-91	**PH350-0001**
70(B)	1974-91	**PH350-0001**
75	1975-88	**PH350-0001**
85	1970-80	**PH350-0001**
88	1989-92	**PH350-0001**
90	1981-82	**PH350-0001**
100(C)	1971, 1979-80	**PH350-0001**
100(C)	1984-92	**PH350-0001**
115	1973-92	**PH350-0001**
125	1971-72	**PH350-0001**
135(G)	1974	**PH350-0001**
140	1977-88	**PH350-0001**
150	1979-88	**PH350-0001**
155	1984-88	**PH350-0001**
175	1977-83	**PH350-0001**
185	1984-88	**PH350-0001**
200	1976-83	**PH350-0001**
235	1978-88	**PH350-0001**

TRIM & POWERTRIM

INSTALACIÓN ELÉCTRICA
WIRING HARNESS
ISTALLAZIONE ELETTRICA

Ref.	R.O.
PH200-WH01	

Sustituye de 2 a 3 cables.
Converts 3-wire Tilt and Trim motors to 2-Wire design
Sustituisce da 2 a 3 cavi.

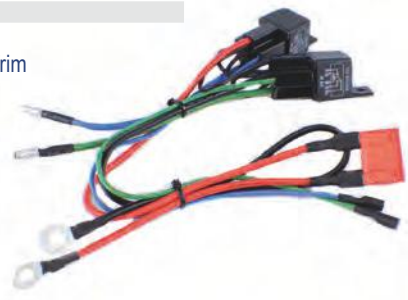

TRIM COMPLETO
COMPLETE TRIM ASSEMBLY
MOTORINO TRIM COMPLETO

Ref.	R.O.	Cables Wires Cavi
PH200-T072	5005822, 5005831, 5005875, 5006479	2

MOTORES / ENGINES / MOTORI
J/E 15- 90 HP (2004+)
4 Tornillos / Bolts / Vite



Ref.	R.O.	Cables Wires Cavi
REC38100-87J00	5031482	2

MOTORES / ENGINES / MOTORI
E40 / E50
(1999-06)



Ref.	R.O.	Cables Wires Cavi
PH200-T046	5032670	2

MOTORES / ENGINES / MOTORI
E40 / J40 / BJ40
E50
J50 / BJ50
(2001-04)



Ref.	R.O.	Cables Wires Cavi
PH200-T022	433226	2

MOTORES / ENGINES / MOTORI
40, 48, 50 HP (1992+)



Ref.	R.O.	Cables Wires Cavi
PH200-T062	5036081, 5032670, 5031482	2

MOTORES / ENGINES / MOTORI
J/BJ 40, 50 (1999-06)
4 Tornillos / Bolts / Vite



Ref.	R.O.	Cables Wires Cavi
PH200-T021	437801, 435532	2

MOTORES / ENGINES / MOTORI
Heavy Duty, J Suffix
25, 40, 48, 50 HP (1992+)
Hollow hex. shaft.



Ref.	R.O.
REC38100-96J00	5033838, 5034526, 5034627, 5035113, 5035513

MOTORES / ENGINES / MOTORI
J60 / 70 / 90 / 115 / 140 / 200 / 225
BJ60 / 70 / 90 / 115 / 140 / 220 / 225
(2003-06)



Ref.	R.O.	Cables Wires Cavi
PH200-T005	434495, 434496, 438529, 5005374 438531	2

MOTORES / ENGINES / MOTORI
60, 70, 90, 115, 150, 175, 200, 225 HP (1991+)
120 - 140 HP (1991-94)
50 HP (3 cyl)
60 JP
V4 - 130 HP



Ref.	R.O.
PH200-T004	439937, 5005254, 438786

MOTORES / ENGINES / MOTORI
75-250 HP EFI (1998+)
Terminales hembra
Female terminal ends
Terminale femmina



Ref.	R.O.	Cables Wires Cavi
PH200-T061	5006319, 5005838, 5005817	2

MOTORES / ENGINES / MOTORI
E75, E90, E115, E130 (2004+)
J40, J50 (2005)
E-TEC



Ref.	R.O.	Cables Wires Cavi
REC435548	435548, 983446, 985237	2

MOTORES / ENGINES / MOTORI
V6 Commercial (1993)
V8 (1993+)



Ref.	R.O.
REC18-6865	5005114

MOTORES / ENGINES / MOTORI
3 RAM
115-225 HP
No / Not / No 250 & 300 HP



Ref.	R.O.	Cables Wires Cavi
PH200-T014	391264, 393259, 393988, 394176, 983019	2

MOTORES / ENGINES / MOTORI
3, 4, 6 & 8 Cyl (1981+)



Ref.	R.O.	Cables Wires Cavi
PH200-T020	387277, 582048, 582155, 584107 582047, 777784	3

MOTORES / ENGINES / MOTORI
3, 4, 6 Cyl (1981+)



Ref.	R.O.	Cables Wires Cavi
REC173944	173944, 172588	

MOTORES / ENGINES / MOTORI
Para motores fueraborda pequeños. Sirve para la bomba OMC 173946.
For most of the small outboards. Its also usefull for OMC pump 173946.
Compatibile con molti motori fueribordo. Si usa con la pompa OMC 173946.



REGULADORES Y RECTIFICADORES
REGULATOR AND RECTIFIERS
REGOLATORI E RADDRIZZATORI

Ref.	R.O.
REC0395204	395204, 395391, 582904

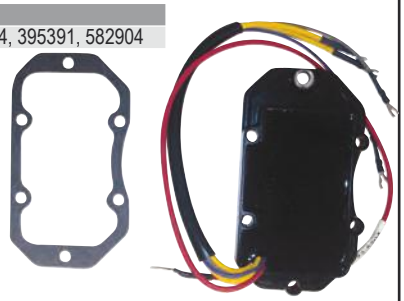

Ref.	R.O.
REC0586271	586271, 584641, 585995

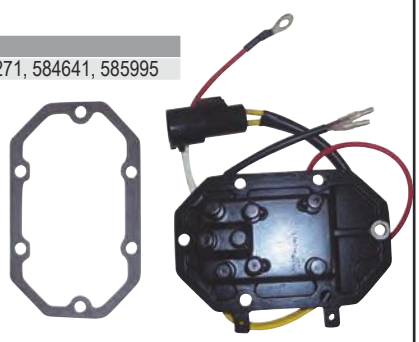

Ref.	R.O.
REC0583689	583266, 583689, 586000, 5844241

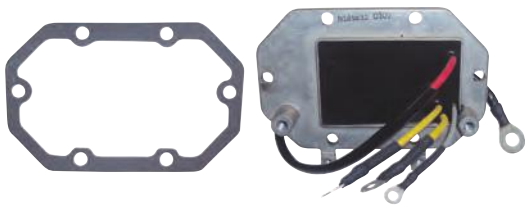

Ref.	R.O.
REC0763791	583512, 584205, 585192

Cuerpo reciclado
Recycled housing
Corpo rigenerato

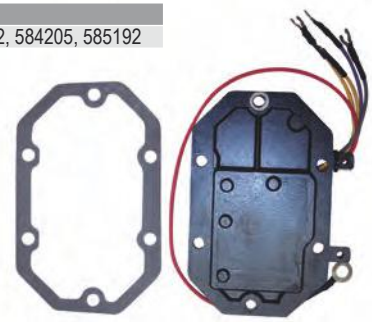

Ref.	R.O.
REC0585195	583529, 584204, 585195

Cuerpo reciclado
Recycled housing
Corpo rigenerato



Ref.	R.O.
REC300-08010	439561

MOTORES / ENGINES / MOTORI
V6 60º, 150-175 HP (1991-95)

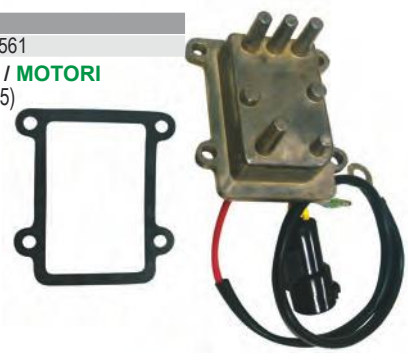

Ref.	R.O.
REC300-03586	586048

MOTORES / ENGINES / MOTORI
V6 60º, 150-175 HP (1996+)



Ref.	R.O.
REC300-03585	586075

MOTORES / ENGINES / MOTORI
V6 60º, 90-115 HP (1996+)



Ref.	R.O.
REC32800-95D01	5030356

MOTORES / ENGINES / MOTORI
5 - 15 HP (1998+)
2 & 4 Tiempos / 2 & 4 Strokes / 2 & 4 Tempi



Ref.	R.O.
REC300-03587	585001

MOTORES / ENGINES / MOTORI
25 - 70 HP (1992+)



Ref.	R.O.
REC300-03588	584890

MOTORES / ENGINES / MOTORI
25 - 35 HP (1995+)



Ref.	R.O.
PH350-0003	509219



HP	AÑO YEAR ANNO	REF.
25 / 40 / 50TL J Elec TR	1992	REC300-03587
25SIK / SIL / SIT	1994-1995	REC300-03587
25 / 35 3 Cyl	1995+	REC300-03588
35JET / TL / J Elec.	1992-1993	REC300-03587
35JET / M-TE / TTL	1993-1995	REC300-03587
35JET / EL / TL / TTL	1996	REC300-03587
35JET Elec.	1997	REC300-03587
40 / 50TE / EL / TL / TTL	1993-1996	REC300-03587
40 / 50 Elec. 2T	1993-03	REC300-03587
60	1992-01	REC300-03587
65 Elec.	1992	REC300-03587
70	1974-91	REC300-03587
80 Jet	1992-94 & 1996	REC0585195
85	1992-95	REC0585195
88	1992-96	REC0585195
90-115 60º V4	1996+	REC300-03585
90	1989-95	REC0585195
100 Comercial	1988-97	REC0585195
100	1991-94	REC0585195
110	1989	REC0585195
112	1994-96	REC0585195
115	1990-98	REC0585195
120	1988-90, 1992-94	REC0763791
125	1991-95	REC0763791
130	1994-2000	REC0763791
140	1988-1994	REC0763791
150 / 175 60º V6	1991-95	REC300-08010
150 / 175 60º V6	1996 & UP	REC300-03586
155 Comercial	1989-90	REC0585195
185 / 200 / 225	1993-94	REC0586271
185 / 200 / 225 / 200COM	1990-92	REC0583689
200 / 225	1986-1989	REC0583689
200 / 225 / 200COM	1994-97	REC0586271
250 / 300	1991-95	REC0586271
250	1997	REC0586271
275	1985-1986	REC0583689
275 / 300 (3.6L)	1987	REC0583689
275 / 300	1988	REC0583689
300 (3.6L)	1985-1986	REC0583689
300	1989-90	REC0583689
1.8 / 2.0L V4	1987-1990	REC0583689
2.7L V6	1986-87	REC0583689
3.0L V6	1988-90	REC0583689
3.0L V6	1993-98	REC0583689
3.6L V8	1987	REC0583689
4.0L V8	1989-1990	REC0583689
V4 & V6 Crossflow	Todos / All / tutti	REC0395204

STARTOR
STARTOR
STARTORI

Ref.	R.O.
REC5000611	581670, 584504, 584840, 585073



Ref.	R.O.
REC0584333	583485, 584333



Ref.	R.O.
REC0583724	581957, 582506, 582730, 583119, 583644, 583724

9 Amp



Ref.	R.O.
REC0583672	582016, 582497, 582867, 583023, 583104, 583671, 583672, 581030, 581987

9 Amp
Unidad remanufacturada
Re Unit
Articolo rigenerato



Ref.	R.O.
REC0584954	584954

6 Amp

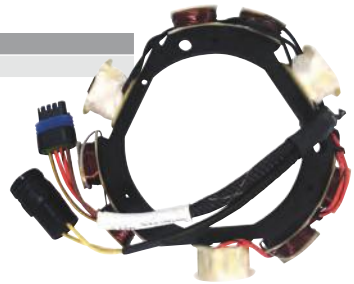

Ref.	R.O.
REC0763760	584849, 763760

20 Amp

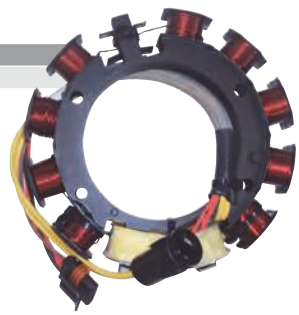

Ref.	R.O.
REC0583670	582847, 583117, 583670

35 Amp

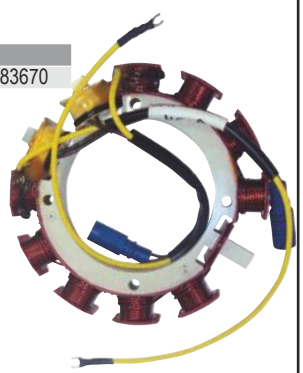

Ref.	R.O.
REC0583415	584287, 763765

35 Amp

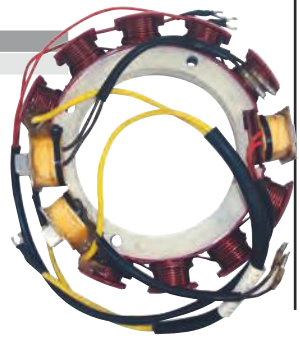

Ref.	R.O.
REC0583668	582574, 583050, 583274, 583668, 763785

35 Amp



Ref.	R.O.
REC0763759	584109, 584981

35 Amp, 6 Cyl

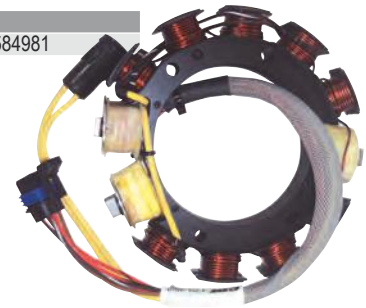

Ref.	R.O.
REC0763767	583340, 583536 763767

9 Amp



Ref.	R.O.	
REC0763763	584560, 763763	6 Amp
REC0763779	584643, 763779	35 Amp



Ref.	R.O.
REC0584288	583561, 584288

35 Amp

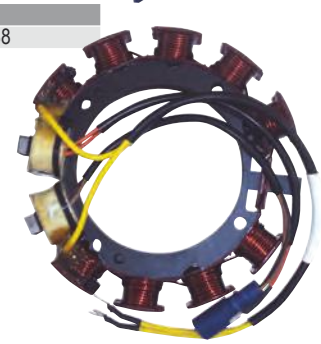

Ref.	R.O.
REC0763764	583710, 584292 763764

35 Amp

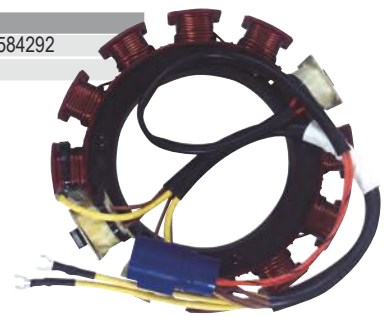

Ref.	R.O.
REC0763769	583410, 763769

9 Amp

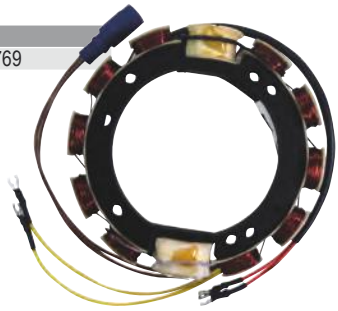

Ref.	R.O.
REC0763770	581651, 584755, 585087
	763770

5 Amp



Ref.	R.O.
REC0763765	583415, 584287
	763765

35 Amp

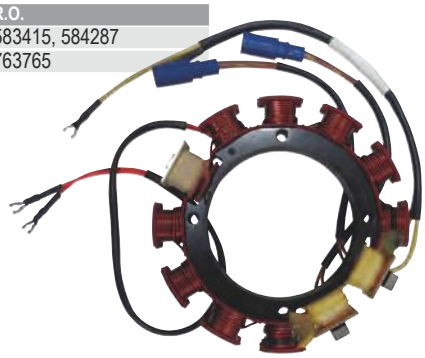

TRIGGERS

Ref.	R.O.
REC0583387	583387



Ref.	R.O.
REC0385008	384461, 385008



Ref.	R.O.
REC0586343	584265, 584914, 586343



Ref.	R.O.
REC0763808	175386



Ref.	R.O.
REC0763773	584804, 763773

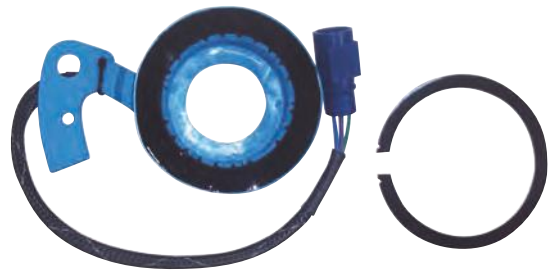

Ref.	R.O.
REC763775	583533, 584586, 763775



Ref.	R.O.
REC0763776	583289, 583379, 582514,
	583045, 763776



Ref.	R.O.
REC0763782	583508, 763773

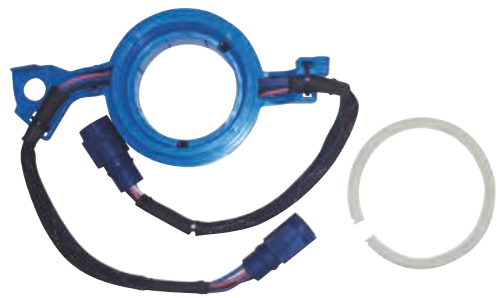

CAJAS NEGRAS
POWER PACKS
CENTRALINE

Ref.	R.O.
REC0584035	583471, 584034, 584035



Ref.	R.O.
REC0586661	584636, 584637, 585114, 586212, 586661

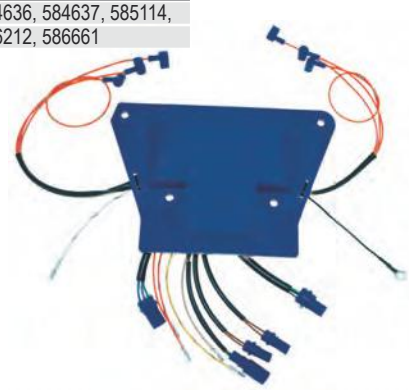

Ref.	R.O.
REC0765386	586015, 586098, 586292

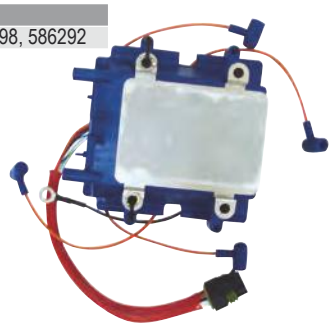

Ref.	R.O.
REC0584041	583489, 584040, 584041



Ref.	R.O.
REC0586667	583476, 584036, 584037, 586217, 586667

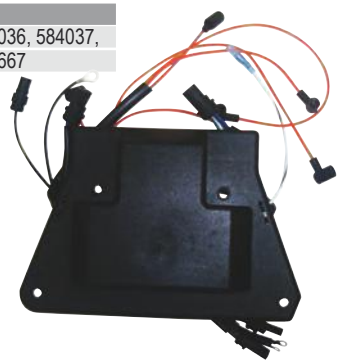

Ref.	R.O.
REC0763803	584642



Ref.	R.O.
REC0583865	583865



Ref.	R.O.
REC0584986	584986, 584988, 584912, 584989, 584991



Ref.	R.O.
REC0584985	584910, 584985, 584990



Ref.	R.O.
REC0436367	436367, 584122

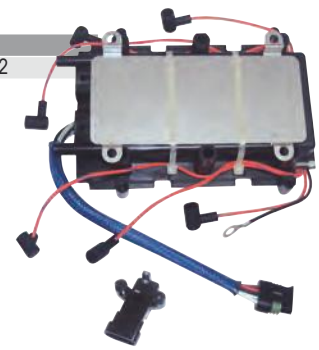

Ref.	R.O.
REC5004532	584808, 585145, 585189, 5004533

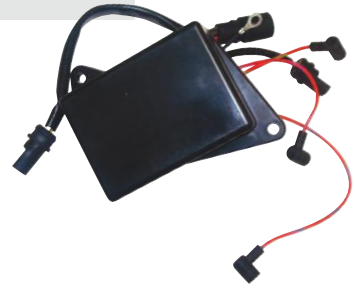

Ref.	R.O.
REC0584028	583773, 584027, 584028



Ref.	R.O.
REC584030	583777, 584029, 584030

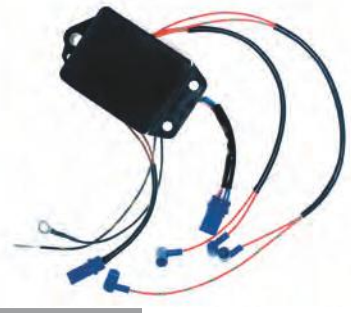

Ref.	R.O.
REC0763793	582705



Ref.	R.O.
REC0585274	585274



Ref.	R.O.
REC0586798	584783



Ref.	R.O.
REC0582262	5814014, 582262, 583041, 583103, 583336

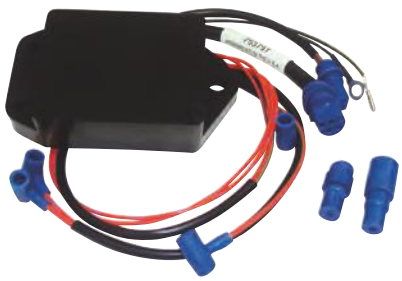

Ref.	R.O.
REC0175316	175316, 585261, 585262



Ref.	R.O.
REC0582642	582138, 582400, 582642, 582556

4 cables
4 wires
4 cavi



Ref.	R.O.
REC0582125	582684, 582125, 582454, 581805

4 cables
4 wires
4 cavi



Ref.	R.O.
REC0582452	582453, 583380

3 cables
3 wires
3 cavi



Ref.	R.O.
REC0586697	396141, 582281, 582285, 582502, 582757, 582880, 583167, 583168, 583169, 583170, 583175, 583604



Ref.	R.O.
REC0582901	582474, 582864, 582901



Ref.	R.O.
REC0586695	396077, 582261, 582504, 582714, 582800, 582889, 583172, 583174, 583241, 584508, 584528, 584746



Ref.	R.O.
REC5001344	584767, 584768, 584908, 585074



Ref.	R.O.
REC0582115	582115,583125, 583143



Ref.	R.O.
REC115742	115742

MOTORES / ENGINES / MOTORI
3.3 HP (1995+)

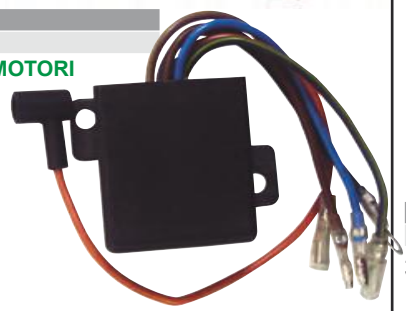

Ref.	R.O.
REC0583320	583122, 583320



Ref.	R.O.
REC0583114	583114



Ref.	R.O.
REC0583748	583748



Ref.	R.O.
REC300-26084	583663, 583667, 584488



Ref.	R.O.
REC300-26085	583896, 584329, 584331, 584489



Ref.	R.O.
REC0764708	581397

2 Cyl





Ref.	R.O.
REC0582057	582057

3 - 6 Cyl



Ref.	R.O.
REC581726	581726



Ref.	R.O.
REC0582056	581731, 582056

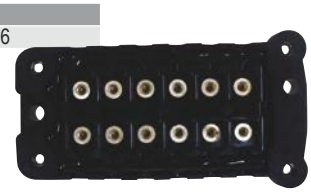

GUÍA / APPLICATION / GUIDE

HP	Cyl.	Año Year Anno	Caja Negra Switch Centraline	Startor	Trigger
3.3	2	1995	REC115742		
4	2	77-84	REC0582452	REC5000611	REC0583387
4, 4.5, 5	2	1985	REC0586697	REC5000611	REC0583387
4	2	1994-96	REC0586697	REC5000611	REC0583387
5	2	1989-92	REC300-26084	REC5000611	REC0583387
5	2	1993-98	REC0586697	REC5000611	REC0583387
6	2	1977-84	REC0582452	REC5000611	REC0583387
6, 8	2	1985	REC0586697	REC5000611	REC0583387
6	2	1989-92	REC300-26084	REC5000611	REC0583387
6	2	1994-2000	REC0586697	REC5000611	REC0583387
8	2	1989-92	REC300-26084	REC5000611	REC0583387
8	2	1994-2003	REC0586697	REC5000611	REC0583387
9.9	2	1985-88	REC0586697	REC5000611	REC0583387
9.9	2	1989-92	REC300-26084	REC5000611	REC0583387
9.9	2	1993	REC0586798	REC0763770	REC0583387
9.9	2	1994-95	REC0586798	REC0763770	
9.9 MAN.	2	1996-2005	REC0586798	REC5000611	
9.9 ELEC.	2	1995-2003	REC0586798	REC0763770	REC0583387
10	2	1994	REC0586798	REC5000611	REC0583387
10 (4 Tiempos / 4 Strokes / 4 Tempi)	2	1996-98		REC0584954	
14	2	1988	REC0586697	REC5000611	REC0583387
14	2	1989-90	REC300-26084	REC5000611	REC0583387
15	2	1983-84	REC0582452	REC5000611	
15	2	1988	REC0586697	REC5000611	REC0583387
15	2	1989-91	REC300-26084	REC5000611	REC0583387
15	2	1992	REC300-26085	REC5000611	REC0583387
15	2	1993		REC0763770	
15	2	1994	REC0586798	REC5000611	
15	2	1995-2000	REC0586798	REC5000611	REC0583387
15 ELEC.	2	1996-97	REC0586798	REC0763770	
15 (4 Tiempos / 4 Strokes / 4 Tempi)	2	1996-2000		REC0584954	REC32800-95D01
20	2	1982-84	REC0582452	REC5000611	REC0583387
20	2	1985-88	REC0586697	REC5000611	REC0583387
20	2	1989-92	REC300-26085	REC5000611	REC0583387
20	2	1993-2000	REC5001344	REC5000611	REC0583387
25	2	1982-84	REC0582452	REC5000611	REC0583387
25	2	1985-88	REC0586697	REC5000611	REC0583387
25	2	1989-92	REC300-26085	REC5000611	REC0583387
25	2	1993-2005	REC5001344	REC5000611	REC0583387
25	3	1994-95	REC5004532	REC0763763	
28	2	1985-88	REC0586697	REC5000611	REC0583387
28	2	1989-92	REC300-26085	REC5000611	REC0583387
28	2	1993-98	REC5001344	REC5000611	REC0583387
30	2	1984	REC0582452	REC5000611	REC0583387
30	2	1985-88	REC0586697	REC5000611	REC0583387
30	2	1989-92	REC300-26085	REC5000611	REC0583387
30	2	1993-2005	REC5001344	REC5000611	REC0583387
35	2	1982-84	REC0582452	REC5000611	REC0583387
35	2	1985-88	REC0586697	REC5000611	REC0583387
35	2	1989-92	REC300-26085	REC5000611	REC0583387
35	2	1992-93	REC0175316	REC0763763	REC0763808
35	2	1993-97	REC5001344	REC5000611	REC0583387
35	2	1993-95	REC0175316	REC0763763	REC0763808
35	2	1996-97	REC0175316	REC0763763	REC0763808
40	2	1985-88	REC0586697	REC5000611	REC0583387
40	2	1989-92	REC300-26085	REC5000611	REC0583387
40	2	1992	REC0175316	REC0763763	REC0763808
40	2	1993	REC5001344	REC5000611	REC0583387
40	2	1993-95	REC0175316	REC0763763	REC0763808
40	2	1996-97	REC5001344	REC5000611	REC0583387
40	2	1996-97	REC0175316	REC0763763	REC0763808
40 MAN.	2	1985	REC0586695	REC5000611	REC0583387
40 COM	2	1993-97	REC0586695	REC5000611	REC0583387
40 MAN.	2	2000-05	REC5001344	REC5000611	REC0583387
40 ELEC.	2	2000-05	REC0175316	REC0763763	REC0763808
45 COM	2	1985	REC0586695	REC5000611	REC0583387
45	2	1986-90	REC0586697	REC5000611	REC0583387
45 COM	2	1989-91	REC300-26085	REC5000611	REC0583387
45 COM	2	1992-2000	REC0586695	REC5000611	REC0583387
48	2	1987-88	REC0586697	REC5000611	REC0583387
48	2	1989-93	REC300-26085	REC5000611	REC0583387
48	2	1994-96	REC5001344	REC5000611	REC0583387
50	2	1971-75	REC0764708		
50 ELEC.	2	1979-83	REC0582452		
50	2	1979-83	REC0582452	REC5000611	REC0583387
50	2	1985-88	REC0586697	REC5000611	REC0583387
50	2	1989-92	REC300-26085	REC5000611	REC0583387
50 TE-S	2	1992	REC0175316	REC0763763	REC0763808
50	2	1993-95	REC0175316	REC0763763	

HP	Cyl.	Año Year Anno	Caja Negra Switch Centraline	Startor	Trigger
50 MAN.	2	1993-95	REC5001344	REC5000611	REC0583387
50	3	1996-98	REC5004532	REC0763763	REC0763773
50 MAN.	2	1997-99	REC5001344	REC5000611	REC0583387
50 ELEC ST	2	1997-99	REC0175316	REC0763763	REC0763808
50 MAN.	2	1998-99	REC5001344	REC5000611	REC0583387
55	2	1979-82	REC0582452		
55	2	1988	REC0586697	REC5000611	REC0583387
55 COM	2	1983-84	REC0582901	REC5000611	REC0583387
55 COM	2	1985	REC0586695	REC5000611	REC0583387
55 COM	2	1986-87	REC0586697	REC5000611	REC0583387
55	2	1989-91	REC300-26085	REC5000611	REC0583387
55	2	1992-2000	REC0586695	REC5000611	REC0583387
60	2	1985	REC0586697	REC5000611	REC0583387
60	3	1986-89	REC0582115	REC0583724	
60	3	1989-91	REC0583748		
60	3	1992	REC0583748	REC0763763	
60	3	1993-2001	REC5004532	REC0763763	REC0763773
65 COM	3	1986-88	REC0583320	REC0583724	
65 COM	3	1989-95	REC0583748		
65 COM ELEC	3	1993-94	REC5004532	REC0763763	REC0763773
65 COM VRO	3	1995	REC0583748		
65 COM	3	1996-2000	REC0585274	REC0763763	
70	3	1986-88	REC0582115	REC0583724	
70	3	1989-91	REC0583748		
70	3	1992	REC0583748	REC0763763	
70	3	1993-2001	REC5004532	REC0763763	REC0763773
75	3	1986-88	REC0582115	REC0583724	
85	4	1973-77	REC0582056		
85	4	1978-83	REC0582125	REC0583672	
85 TJL	4	1991-95	REC0584028	REC0763767	REC0763776
85 TTLW/TRIM	4	1994	REC584030	REC0763767	REC0763776
85 TTL	4	1995	REC0584028	REC0763767	REC0763776
88	4	1988	REC0582262	REC0763767	
88	4	1989-93	REC0584028	REC0763767	REC0763776
88	4	1994	REC584030	REC0763767	REC0763776
88	4	1994-96	REC0584028	REC0763767	REC0763776
90, 6, 10 Amp.	4	1984	REC0582125	REC0583672	
90	4	1989-93	REC0584028	REC0763767	REC0763776
90	4	1994-95	REC584030	REC0763767	REC0763776
90 20 / 25IN	4	1996-97	REC0584028	REC0763767	REC0763776
90 60° Deg.	4	1996-2006	REC0765386	REC0763760	REC0586343
100	4	1990-93	REC0584028	REC0763767	REC0763776
100	4	1994	REC584030	REC0763767	REC0763776
100 COM	4	1989-97	REC584030	REC0763767	REC0763776
100	4	1989	REC0584028	REC0763767	REC0763776
100 COM, 105	4	2000-06	REC0765386	REC0763760	REC0586343
112 20, 25 IN	4	1994-96	REC0584028	REC0763767	REC0763776
115 6, 10 Amp.	4	1978-84	REC0582125	REC0583672	
115 No / Not / No Trim	4	1985		REC0583672	
115	4	1990-93	REC0584028	REC0763767	REC0763776
115	4	1994	REC584030	REC0763767	REC0763776
115	4	1995-96	REC0584028	REC0763767	REC0763776
115 60° Deg.	4	1995-2006	REC0765386	REC0763760	REC0586343
115 20,25 IN	4	1997	REC0584028	REC0763767	REC0763776
120 35 Amp.	4	1984-87	REC0582125		
120	4	1986-87	REC0582262		REC0763776
120 Looper	4	1988-90	REC0584041	REC0763769	REC0763782
120 35 Amp.	4	1988-95	REC0584041	REC0584288	REC0763782
120 10 Amp.	4	1992-94	REC0584041	REC0763769	REC0763782
125	4	1991-94	REC0584041	REC0763769	REC0763782
125 COM ELEC.	4	1989-95	REC0584041	REC0763769	REC0763782
130 35 Amp.	4	1988-2000	REC0584041	REC0584288	REC0763782
130	4	1995-2000	REC0584041	REC0763769	REC0763782
135	4	1973-77	REC0582056		
135	4	2001	REC0584041	REC0763769	REC0763782
140	4	1977	REC0582056		
140	4	1978-84	REC0582125	REC0583672	
140 10 Amp.	4	1984	REC0582125	REC0583672	
140 Looper	4	1988-95	REC0584041	REC0763769	REC0763782
150	6	19978	REC0582057		
150	6	1979-84	REC0582642	REC0583672	
150 35 Amp.	6	1984	REC0582642	REC0583668	
150	6	1985		REC0583672	
150 35 Amp.	6	1985		REC0583668	
150 TL/TX	6	1986-87	REC0583114	REC0583672	
150 ST	6	1986-88	REC0583114		
150 SL/ST	6	1989-90	REC0583865	REC0763764	
150 ST	6	1990	REC0583865	REC0763764	
150 60°	6	1991	REC0584985	REC0583415	REC0586343
150 SL/ST	6	1991	REC0583865	REC0763764	REC0586343
150	6	1992-2006	REC0584985	REC0763759	REC0586343

HP	Cyl.	Año Year Anno	Caja Negra Switch Centraline	Startor	Trigger
155 COM 35 Amp.	6	1984	REC0582642	REC0583668	
155 COM	6	1984		REC0583668	
155 COM	6	1986-88	REC0583114	REC0583668	
155 COM	6	1989-92	REC0583865	REC0763764	
175	6	1977-78	REC0582057		
175	6	1979-83	REC0582642	REC0583672	
175	6	1985-88		REC0583668	
175	6	1989-90	REC0583865	REC0763764	
175GL/EK/EL/NX	6	1991-2006	REC0584985	REC0763759	REC0586343
175	6	1992-98	REC0584985	REC0763759	REC0586343
185	6	1979-84	REC0582642	REC0583672	
185	6	1985		REC0583668	
185	6	1990-92	REC0586667	REC0763765	REC763775
200	6	1976-78	REC0582057		
200	6	1979-83	REC0582642	REC0583672	
200	6	1986-87		REC0583670	
200	6	1988-92	REC0586667	REC0763765	REC763775
200	6	1993-2000	REC0586661		REC763775
225	6	1988-1992	REC0586667	REC0763765	REC763775
225	6	1993-2000	REC0586661	REC0763779	REC763775
235	6	1978	REC0582057		
235	6	1979-84	REC0582642	REC0583672	
235 35 Amp.	6	1984	REC0582642	REC0583668	
235 10 Amp.	6	1985		REC0583672	
235 35 Amp.	6	1985		REC0583668	
275 3.6L	8	1986-87	REC0582262	REC0583670	
250	8	1993-95	REC0763803	REC0763779	
250	8	1997	REC0763803	REC0763779	
300 3.6L	8	1986-87	REC0582262	REC0583670	
300	8	1993-95	REC0763803	REC0763765	
2.5L, 2.6L	6	1982	REC0582642	REC0583672	
1.6L	8	1983	REC0582125	REC0583672	
2.6L 35 Amp.	6	1983	REC0582642	REC0583668	
1.6L S V4	8	1984	REC0582125	REC0583672	
2.5L, 2.6L	6	1984		REC0583668	
1.6L	4	1985		REC0583672	
2.5L, 2.6L	6	1985		REC0583668	
2.6L 35 Amp.	6	1986	REC0583114	REC0583668	
1.8L	4	1987	REC0582262		
2.7L	6	1987		REC0583668	
3.6L	8	1987	REC0582262	REC0583670	
1.6L	4	1988-90	REC0582262	REC0763767	REC0763776
2.0L	4	1988-90	REC0584041	REC0584288	REC0763782
3.0L	6	1988-90	REC0586667	REC0763765	REC763775
4.0L	8	1989-90	REC0584035	REC0763765	

BOBINAS
COILS
BOBINE

Ref.	R.O.
REC0502881	502881, 581786
REC0502880	581407



Ref.	R.O.
REC0502888	582888, 582091

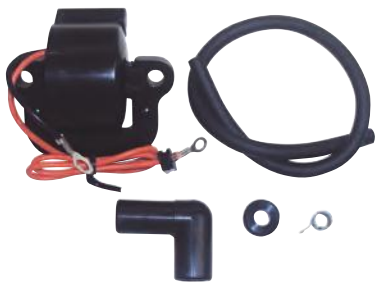

Ref.	R.O.
REC0502890	502890, 582160, 584632



Ref.	R.O.
REC0582382	582382



GUÍA / APPLICATION / GUIDA

HP	Año Year Anno	Ref	Cantidad Quantity Quantità
1.5, 2 COLT, JR.	1968-90	REC0584477	1
2,2.2,3	1995	REC0583740	1
3	1952-68	REC0584477	1
4	1950-76	REC0584477	1
4	1981-89	REC0584477	1
4	1977-80	REC584561	1
4 DELUXE	1985	REC0582508	2
4.5	1980-84	REC584561	2
4.5	1986-87	REC0582508	2
5	1950-76	REC0584477	2
5	1985-91	REC0582508	2
5.5 - 6	1950-76	REC0584477	2
6	1977-84	REC584561	2
6	1985-90	REC0582508	2
6.5 COMM	1989-90	REC0582508	2
6.8	1991-99	REC0583740	1
7.5	1954-58	REC0584477	2
7.5	1980-84	REC584561	2
8	1980-84	REC584561	2
8	1985-90	REC0582508	2
9.5	1964-73	REC0584477	2
9.9, 15	1974-76	REC0502880	2
9.9, 15	1977-84	REC584561	2
9.9, 15	1985	REC0582508	2
9.9,15	1993-95	REC0583740	1
9.9, 15 4-STRK	1994	REC584561	2
10 - 15	2002-04	REC33410-94400-000	
10	1951-63	REC0584477	2
10, 14 COMM	1989-90	REC584561	2
14	1988	REC584561	2
15	1951-72	REC0584477	2
18	1951-72	REC0584477	2
18,2	1973	REC0502881	2
20	1951-72	REC0584477	2
20	1985	REC0582508	2
25	1951-72	REC0584477	2
25	1973-76	REC0502881	2
25	1977-84	REC584561	2
25	1985	REC0582508	2
25 COMM	1985-91	REC0582508	
25 COMM	1956-70	REC0584477	2
28	1987-88	REC584561	2
28	1997-98	REC0583740	2
28	1989	REC0582508	2
30	1956-70	REC0584477	2
30	1977-84	REC584561	2
30	1985	REC0582508	2
33,35	1956-70	REC0584477	2
35	1976	REC0502881	2
35	1977-84	REC584561	2
40	1960-73	REC0584477	2
40	1974	REC0502880	2
40 (B)	1975-83	REC0502881	2
40	1977-84	REC584561	2
40	1985-88	REC0582508	2
40 COMM	1985-90	REC0582508	2
45 COMM	1985-92	REC0582508	2
45 SS	1987-90	REC0582508	2
45	1989-96	REC0583740	2
48	1987	REC0582508	2
50	1971-75	REC0502890	2
50	1978-84	REC584561	2
50	1985-88	REC0582508	2
55	1978-84	REC584561	2
60	1978-84	REC584561	2
60	1985	REC0582508	3
60 SST	1989-90	REC0582508	3
65	1971-75	REC0502890	3
65	1979-84	REC584561	3
65 COMM	1985	REC0582508	3
70	1974-75	REC0502890	4
70	1979-84	REC584561	3
70	1985	REC0582508	3
70	1974-74	REC0502890	1

HP	Año Year Anno	Ref	Cantidad Quantity Quantità
75	1979-84	REC584561	3
75	1985	REC0582508	3
85	1969-72	REC0582382	1
85	1973-75	REC0502890	1
85	1976-77	REC0502888	4
85	1978-84	REC584561	4
85	1985	REC0582508	4
88	7987	REC0582508	4
90	1978-84	REC584561	4
90	1985-94	REC0582508	4
90	19995-99	REC0583740	2
100	1971-72	REC0582382	1
100	1978-84	REC584561	4
100	1985	REC0582508	4
1600 CC	1988	REC0582508	4
110	1986-90	REC0582508	4
115	1969-70	REC0582382	1
115	1973-74	REC0502890	4
115	1976-77	REC0502888	4
115	1978-94	REC584561	4
120	1985	REC0582508	4
125	1971-72	REC0582382	1
125	1991	REC0582508	4
125 COMM	1989	REC0582508	4
135	1973-75	REC0502890	4
135	1976	REC0502888	4
135	1977	REC0502888	4
140	1978-84	REC584561	4
140	1985	REC0582508	4
150	1976-78	REC0502888	1
150	1979-84	REC584561	6
150 (A)	1985	REC0582508	6
155 COMM (A)	1984	REC0582508	6
2500 CC	1988	REC0582508	6
175 V6	1991-99	REC0583740	3
175	1976-78	REC0502888	6
175	1979-84	REC584561	6
175 (A)	1985	REC0582508	6
185	1984	REC0582508	6
200	1976-78	REC0502888	6
200	1979-84	REC584561	6
200	1985	REC0582508	6
225	1986	REC0582508	6
235	1976-78	REC0502888	6
235	1979-84	REC584561	6
250	1991	REC0582508	8
275	1985	REC0582508	8
300, 3.6	1985	REC0582508	8
SAIL DRIVE	1978-84	REC584561	2
SAIL DRIVE	1985	REC0582508	2

Ref.	R.O.
REC33410-94400-000	5032732

MOTORES / ENGINES / MOTORI
10 - 15 HP (2002-04)
4 Tiempos / 4 Strokes / 4 Tempi



Ref.	R.O.
REC0582508	582508



Ref.	R.O.
REC0584477	584477

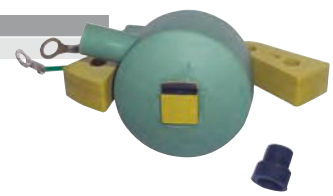

Ref.	R.O.
REC584561	584561, 582366, 583737



Ref.	R.O.
REC0583740	583740



INTERRUPTORES
CUT OFF SWITCHES
INTERRUTTORI

KIT LLAVES
KILL SWITCH KEYS
KIT CHIAVI

Ref.	R.O.
GS11294	

GOLDENSHIP

Kit de 8 llaves de recambio para:
Kit of 8 spare keys for:
Kit di 8 chiavi di ricambio per:
Johnson /Evinrude, OMC, Mercury, Yamaha, Honda, Suzuki, Tohatsu.



DESCONECTADOR DE SEGURIDAD
IGNITION KILL SWITCH
INTERRUTTORE DI SICUREZZA

Ref.	R.O. OEM	Envase Pack Qnt
MP28870	585134	1 x blister
REC37830-89E03	5030225, 5032047	1 x blister
REC37820-92E03	5031481	1 x blister

RECmar



REC37830-89E03



MP28870



REC37820-92E03

Ref.	Características Features Caractteristiche	Envase Pack Qnt
REC40970	Conjunto completo / Complete kit / Kit completo	1 x blister
REC40990	Cuerda tirador recambio / Spare / Corda elastica ricambio	1 x blister
GS11290	Conjunto completo / Complete kit / Kit completo	1 x blister
GS11291	Cuerda tirador recambio / Spare / Corda elastica ricambio	1 x blister
GS11292	Kit completo / Complete kit / Kit completo	1 x blister

Interruptor de encendido para todo tipo de motores fueraborda o intraborda.
Emergency and stop switch for inboard or outboards.
Interruttore di accensione per tutti i tipi di motori entrobordo e fuoribordo.

GOLDENSHIP

RECmar



GS11290 - GS11291



REC40970- REC40990



GOLDENSHIP GS11292

LLAVES DE ARRANQUE
IGNITION STARTER SWITCHES
CHIAVE DI AVVIAMENTO

Ref.	R.O. OEM	Terminales Terminals Terminali	Posiciones Positions Posizione	Envase Pack Qnt
MP39100	386545		3	1 x blister
MP39760	393301, 508180	6	3	1 x blister

MP39100

Llave de arranque de 3 posiciones: Off-Contacto-Arranque (Choke). Fabricada en poliéster anticorrosión.
3 positions, Off-Run-Start. 5+1 screws. Magneto.
Chiave di avviamento a 3 posizioni: Off-Contatto-Avviamento. In poliestere anticorrosione.



MP39760

Llave de arranque de 3 posiciones con retroceso, Off-Contacto-Arranque (Choke). Fabricada en poliéster anticorrosión.
3 positions, Off-Run-Start. 5+1 screws. Magneto.
Chiave di avviamento a 3 posizioni con ritorno: Off-Contatto-Avviamento. In poliestere anticorrosione.



Ref.	R.O.
REC5005801	5005801, 0175974

MOTORES / ENGINES / MOTORI
10 - 200 HP (1996+)
2 & 4 Tiempos
2 & 4 Strokes
2 & 4 Tempi



PLATINOS Y CONDENSADORES
POINTS & CONDENSERS
PUNTINE E CONDENSATORI

PLATINOS / POINTS / PUNTINE

Ref.	R.O.
REC0581207	581207

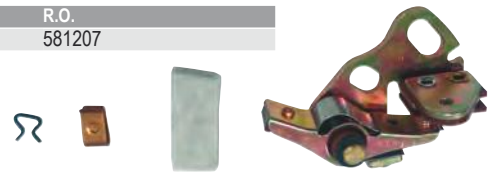

Ref.	R.O.
REC0580290	580290



Ref.	R.O.
REC0580148	580148



CONDENSADORES
CONDENSER
CONDENSATORI

Ref.	R.O.
REC0580321	580321
REC0581419	581419
REC0580256	580256



KITS

Ref.	2 Platino 2 Point 2 Puntine	+	2 Condensador 2 Condenser 2 Condensatori
REC0172522	REC0580148	+	REC0580321
REC0172523	REC0580148	+	REC0581419
REC0172806	REC0581207	+	REC0581419
REC0172525	REC0580290	+	REC0580256

GUÍA PLATINOS CONDENSADORES
CONDENSER & POINTS GUIDE
GUIDA CONDENSATORI E PUNTINE

HP	Año Year Anno	Platinos Points Puntine	Condensador Condenser Condensatori	Kit Set Kit
3	1950-68	REC0580148	REC0580321	REC0172522
4	1969-76	REC0580148	REC0580321	REC0172522
4	1981-90	REC0580148	REC0580321	REC0172522
4.5	1981	REC0581207	REC0581419	REC0172806
5	1950-68	REC0580148	REC0580321	REC0172522
5.5	1954-64	REC0580148	REC0580321	REC0172522
6	1951-76	REC0580148	REC0580321	REC0172522
7.5	1950-68	REC0580148	REC0580321	REC0172522
9.5	1964-73	REC0580148	REC0580321	REC0172522
9.5	1974-76	REC0581207	REC0581419	REC0172806
9.9	1974-76	REC0580290	REC0581419	REC0172806
10	1950-68	REC0580148	REC0580321	REC0172522
15	1974-76	REC0581207	REC0581419	REC0172806
15	1950-68	REC0580148	REC0580321	REC0172522
18	1957-61	REC0580148	REC0580321	REC0172522
18	1962-73	REC0580148	REC0581419	REC0172523
20	1957-76	REC0580148	REC0581419	REC0172523
25	1969-76	REC0580148	REC0581419	REC0172523
28	1962-64	REC0580148	REC0581419	REC0172523
30	1956	REC0580148	REC0580321	REC0172522
33	1965-70	REC0580148	REC0581419	REC0172523
35	1957-61	REC0580148	REC0580321	REC0172522
35	1976	REC0580148	REC0581419	REC0172523
40	1951-61	REC0581207	REC0580321	REC0172522
40	1962-73	REC0580148	REC0581419	REC0172523
40	1974-83	REC0580148	REC0581419	REC0172523
40C	1981-83	REC0581207	REC0581419	REC0172806
45	1958-59	REC0580290	REC0580256	REC0172525
50	1958-59	REC0580290	REC0580256	REC0172525
60	1964-67	REC0580290	REC0580256	REC0172525
75	1960-65	REC0580290	REC0580256	REC0172525
80	1966-67	REC0580290	REC0580256	REC0172525
90	1964-75	REC0580290	REC0580256	REC0172525
100	1966	REC0580290	REC0580256	REC0172525

BUJÍAS
SPARK
CANDELE

JOHNSON

Modelo Model Modello	Años Years Anni	Ref. NGK	Ref. CHAMPION
2.0 Excel 4, Ultra	1988-87	NGKB7HS	CHAUL81C
2.0 Colt, Jr	1990-71	NGKBR6S	CHARJ8C/CHAJ8C
2.0, 2R	1984-71	NGKBR6S	CHARJ8C/CHAJ8C
2.0 (1 Cyl)	2001-91	NGKBPR6HS	CHAQL87YC/CHAL87YCC
2.3 (1 Cyl)	1998-91	NGKBPR6HS	CHAQL87YC/CHAL87YCC
2.5	1988-87	NGKBR6HS	CHAQL82C/CHAL82C
3.0 (2 Cyl)	1997-89	NGKBR6HS	CHAQL82C/CHAL82C
3.3 (1 Cyl)	2003-91	NGKBPR6HS	CHAQL87YC/CHAL87YCC
4.0 Excel, Ultra	1988-87	NGKBZ7HS-10	CHAQL77JC4/ CHAL77JC4
4.0 (2 Cyl)	2003-89	NGKBR6HS	CHAQL82C/CHAL82C
4.0	1988	NGKBZ7HS-10	CHAQL77JC4/ CHAL77JC4
4.0	1987-77	NGKBR6HS	CHAQL82C/CHAL82C
4.0	1984-81	NGKBZ7HS-10	CHAQL77JC4/ CHAL77JC4
4.0	1976-69	NGKBR6S	CHARJ8C/CHAJ8C
4.5	1985-80	NGKBR6HS	CHAQL82C/CHAL82C
5.0 Angler	1968-65	NGKBR6S	CHARJ8C/CHAJ8C
4.0 (4 T / 4 Strokes / 4 Tempi)	2003-97	NGKD6HA	
5.0 (1 Cyl)	2001-98	NGKBZ7HS-10	CHAQL77JC4/ CHAL77JC4
5.0	1997-90	NGKBR6HS	CHAQL82C/CHAL82C
5.0 4T. OHC 128cc.	1997-03	NGKD6HA	
6.0, 6R, 6RL	1976-71	NGKBR6S	CHARJ8C/CHAJ8C
6.0 4T OHC 128cc.	2003-97	NGKD6HA	
6.0 (2 T / 2 Strokes / 2 Tempi)	2001-77	NGKBR6HS	CHAQL82C/CHAL82C
6.0	1976-65	NGKBR6S	CHARJ8C/CHAJ8C
6.5 COM	1993-81	NGKBR6HS	CHAQL82C/CHAL82C
7.5	1997-77	NGKBR6HS	CHAQL82C/CHAL82C
8.0 COM	2001-77	NGKBR6HS	CHAQL82C/CHAL82C
8.0 4 T. 211 cc	2003-96	NGKD6HA	
8.0 4T OHC 211cc.	2003-96	NGKD6HA	
8.0 (2 T / 2 Strokes / 2 Tempi)	2001-77	NGKBR6HS	CHAQL82C/CHAL82C
9.9 4 T, OHC	2003-95	NGKDCPR7E	CHARA8HC
9.9, 2 T SOHC	2003-02	NGKDCPR7E	CHARA8HC
9.9, 2 T, OHC	2001-77	NGKBR7HS	CHAQL82C/CHAL82C
9.9 4T OHC 211cc.	1998-96	NGKD6HA	
10 COM	2003-94	NGKBR7HS	CHAQL82C/CHAL82C
10 COM	1993-92	NGKBZ7HS-10	CHAQL77JC4/ CHAL77JC4
10 COM	1982-81	NGKBUHW-2	
14 COM	1991-81	NGKBZ7HS-10	CHAQL77JC4/ CHAL77JC4
14	1989-88	NGKBZ7HS-10	CHAQL77JC4/ CHAL77JC4
15 Kero	1998-95	NGKBUHXW-1	CHAUL77V
15 COM	2001-94	NGKBR7HS	CHAQL82C/CHAL82C
15 COM	1993-92	NGKBZ7HS-10	CHAQL77JC4/ CHAL77JC4
15 (4 T / 4 Strokes / 4 Tempi), OHC	2003-95	NGKDCPR7E	CHARA8HC
15 (2 T/ 2 Strokes / 2 Tempi)	2001-94	NGKBR7HS	CHAQL82C/CHAL82C
15	1992-77	NGKBZ7HS-10	CHAQL77JC4/ CHAL77JC4
15	1980-78	NGKBUHW-2	
15	1976-74	NGKB7HS	CHAUL81C
15	1971-56	NGKBR6S	CHARJ8C/CHAJ8C
18 Jet (2 Cyl)	1998-95	NGKBR7HS	CHAQL82C/CHAL82C

Modelo / Model / Modello	Años / Years / Anni	Ref. NGK	Ref. CHAMPION
20 Jet (2 Cyl)	2001-99	NGKBR7HS	CHAQL82C/CHAL82C
20, (2 Cyl)	1998-78	NGKBR7HS	CHAQL82C/CHAL82C
20	1993-78	NGKBR7HS	CHAQL82C/CHAL82C
25 COM	2002-81	NGKBUHXW-1	CHAUL77V
25, (3 Cyl)	2001-95	NGKBR6HS	CHAQL82C/CHAL82C
25, E,EL,R,RL	1976-73	NGKBR6S	CHARJ8C/CHAJ8C
25, (2 Cyl)	2002-77	NGKBR7HS	CHAQL82C/CHAL82C
25	1976-69	NGKBR6S	CHARJ8C/CHAJ8C
28, SPL, (2 Cyl)	1997-78	NGKBR7HS	CHAQL82C/CHAL82C
28 Jet	2003-92	NGKBPZ8HS-10	CHAQL78YC/CHAL78YC
30 Jet (2 Cyl)	2001-99	NGKBPR7HS	CHAQL78YC/CHAL78YC
30 (4 T / 4 Strokes / 4 Tempi) OHC	2003-95	NGKDCPR7E	CHARA8HC
30, (2 Cyl)	2002-78	NGKBR7HS	CHAQL82C/CHAL82C
35 Jet (2 Cyl)	2003-93	NGKBPZ8HS-10	CHAQL78YC/CHAL78YC
35, (3 Cyl)	2001-95	NGKBR7HS	
35, (2 Cyl)	1997-77	NGKBZ7HS-10	CHAQL77JC4/ CHAL77JC4
40 Jet (3 Cyl)	2001-99	NGKBR7HS	CHAQL82C/CHAL82C
40 COM 45 cid	2003-84	NGKBUHXW-1	CHAUL77V
40 COM 43 cid	1990-81	NGKBR7HS	CHAQL82C/CHAL82C
40, E,EL,R,RL	1976-75	NGKBZ7HS-10	CHAQL77JC4/ CHAL77JC4
40 (4 T / 4 Strokes / 4 Tempi) DOHC	2003-02	NGKDCPR7E	CHARA8HC
40, (2 Cyl)	2002-89	NGKBPZ8HS-10	CHAQL78YC/CHAL78YC
40, (2 Cyl)	1988-80	NGKBZ7HS-10	CHAQL77JC4/ CHAL77JC4
45 COM	2002-84	NGKBUHXW-1	CHAUL77V
48, SPL (2 Cyl)	1997-94	NGKBPZ8HS-10	CHAQL78YC/CHAL78YC
48, (2 Cyl)	1997-89	NGKBPZ8HS-10	CHAQL78YC/CHAL78YC
48, (2 Cyl)	1988-80	NGKBZ7HS-10	CHAQL77JC4/ CHAL77JC4
50, (3 Cyl)	1998-95	NGKBPZ8HS-10	CHAQL78YC/CHAL78YC
50, (2 Cyl)	2002-89	NGKBPZ8HS-10	CHAQL78YC/CHAL78YC
50, (2 Cyl)	1988-80	NGKBZ7HS-10	CHAQL77JC4/ CHAL77JC4
55 COM, (2 Cyl)	1995-94	NGKBPZ8HS-10	CHAQL78YC/CHAL78YC
55 COM	2003-86	NGKBUHXW-1	CHAUL77V
55, (2 Cyl)	1989-76	NGKB7HS	CHAUL81C
60 (4 T / 4 Strokes / 4 Tempi), OHC	2005-02	NGKBPR6ES	
60, (3 Cyl) 56 cid	1998-94	NGKBPZ8HS-10	CHAQL78YC/CHAL78YC
60, (3 Cyl) 56 cid	1993-89	NGKBZ7HS-10	CHAQL77JC4/ CHAL77JC4
60, (3 Cyl) 49 cid	1989-75	NGKBZ7HS-10	CHAQL77JC4/ CHAL77JC4
60, (2 Cyl)	1985-80	NGKBZ7HS-10	CHAQL77JC4/ CHAL77JC4
65 COM, (3 Cyl)	1995-94	NGKBPZ8HS-10	CHAQL78YC/CHAL78YC
65 COM HC LC	2003-88	NGKBUHXW-1	CHAUL77V
65 COM HC LC	1987-84	NGKBZ7HS-10	CHAQL77JC4/ CHAL77JC4
65 Jet CV4	1997-92	NGKBR7HS	CHAQL82C/CHAL82C
65, (3 Cyl)	1973-72	NGKBZ7HS-10	CHAQL77JC4/ CHAL77JC4
70, (3 Cyl) 56 cid	2001-97	NGKBPZ8HS-10	CHAQL78YC/CHAL78YC
70, (3 Cyl) 56 cid	1993-89	NGKBZ7HS-10	CHAQL77JC4/ CHAL77JC4
70, (3 Cyl) 49 cid	1989-75	NGKBZ7HS-10	CHAQL77JC4/ CHAL77JC4
75, (3 Cyl) 49 cid	1989-75	NGKBZ7HS-10	CHAQL77JC4/ CHAL77JC4
80 Jet CV4	2001-79	NGKBR7HS	CHAQL82C/CHAL82C
85, V4 Backtroller	1995-94	NGKBR7HS	CHAQL82C/CHAL82C
85	1993-86	NGKBZ7HS-10	CHAQL77JC4/ CHAL77JC4
85	1980-68	NGKB7HS	CHAUL81C
88 CV4 SPL	1997-79	NGKBR7HS	CHAQL82C/CHAL82C
90 Tubojet CV4	1998-94	NGKBR7HS	CHAQL82C/CHAL82C
90 LV4 FFI	1998	NGKPZFR6H	CHAXC12PEPB
90 LV4	2000-95	NGKBPZ8HS-10	CHAQL78YC/CHAL78YC
90 CV4	1998-79	NGKBR7HS	CHAQL82C/CHAL82C
100 V4	1980-79	NGKB7HS	CHAUL81C
100 COM	2001-84	NGKBUHXW-1	CHAUL77V
105 COM LV4	2003-97	NGKBPZ8HS-10	CHAQL78YC/CHAL78YC
105 LV6 105 Jet	2003-93	NGKBPZ8HS-10	CHAQL78YC/CHAL78YC
110 CV4	1997-79	NGKBR7HS	CHAQL82C/CHAL82C
112 CV4	1997-79	NGKBR7HS	CHAQL82C/CHAL82C
115 Turbojet CV4	1998-94	NGKB7HS	CHAUL81C
115 LV4 FFI	1998	NGKPZFR6H	CHAXC12PEPB
115 Fast Stike LV4	2002-95	NGKBPZ8HS-10	CHAQL78YC/CHAL78YC
115 CV4	1998-79	NGKBR7HS	CHAQL82C/CHAL82C
115 COM	1984-75	NGKB7HS	CHAUL81C
115	1993-86	NGKBZ7HS-10	CHAQL77JC4/ CHAL77JC4
115	1979-73	NGKBZ7HS-10	CHAQL77JC4/ CHAL77JC4
115	1985	NGKBUHXW-1	CHAUL77V
120 LV4	2003-85	NGKBPZ8HS-10	CHAQL78YC/CHAL78YC
125 COM	1972-71	NGKB7HS	CHAUL81C
130 LV4	2003-85	NGKBPZ8HS-10	CHAQL78YC/CHAL78YC
135 Starflite	1984-73	NGKBUHXW-1	CHAUL77V
140 LV4	2003-85	NGKBPZ8HS-10	CHAQL78YC/CHAL78YC
140	1984-73	NGKBUHXW-1	CHAUL77V
150 LV6 FFI	1998-97	NGKPZFR6H	CHAXC12PEPB
150 Fast Strike LV6	2002-91	NGKBPZ8HS-10	CHAQL78YC/CHAL78YC
150 CV6	1991-88	NGKBZ7HS-10	CHAQL77JC4/ CHAL77JC4
150 CV6	1987-78	NGKBUHXW-1	CHAUL77V
150 COM LV6	1998-93	NGKBPZ8HS-10	CHAQL78YC/CHAL78YC
155 CV6	1987-78	NGKBUZ8H	CHAQL16V
155 COM CV6	1992-89	NGKBUZ8H	CHAQL16V
175 LV6 FFI	1998	NGKPZFR6H	CHAXC12PEPB
175 Fast strike LV6	2002-91	NGKBPZ8HS-10	CHAQL78YC/CHAL78YC
175 CV6	1991-88	NGKBZ7HS-10	CHAQL77JC4/ CHAL77JC4
175	1987-77	NGKBUHXW-1	CHAUL77V
185	1987-77	NGKBUZ8H	CHAQL16V
185	1993-90	NGKBZ7HS-10	CHAQL77JC4/ CHAL77JC4
200	1983-76	NGKBUZ8H	CHAQL16V
200 COM	1992	NGKBUZ8H	CHAQL16V
200 COM	1998-93	NGKBPZ8HS-10	CHAQL78YC/CHAL78YC
200 V6	1993-86	NGKBZ7HS-10	CHAQL77JC4/ CHAL77JC4
200 Venom LV6	2003-94	NGKBPZ8HS-10	CHAQL78YC/CHAL78YC
225 V6	1993-86	NGKBZ7HS-10	CHAQL77JC4/ CHAL77JC4
225 Venom LV6	2003-94	NGKBPZ8HS-10	CHAQL78YC/CHAL78YC
235	1985-78	NGKBUHXW-1	CHAQL16V
250 LV6	2001-99	NGKBUHXW-1	CHAQL16V
250 V8	1997-85	NGKBPZ8HS-10	CHAQL78YC/CHAL78YC
275	1988-85	NGKBPR7HS	CHAQL78YC/CHAL78YC
300 V8	1997-85	NGKBPZ8HS-10	CHAQL78YC/CHAL78YC

EVINRUDE

Modelo / Model / Modello	Años / Years / Anni	Ref. NGK	Ref. CHAMPION
1.2 Magneto	1990-86	NGKBR6S	CHARJ8C/CHAJ8C
2.0 Jr. Colt	1990-71	NGKBR6S	CHARJ8C/CHAJ8C
2.0, 2R	1984-71	NGKBR6S	CHARJ8C/CHAJ8C
2.0, (1 Cyl)	1998-91	NGKBPR6HS	CHAQL87YC/ CHAL87YCC
2.3	1997-91	NGKBPR6HS	CHAQL87YC/ CHAL87YCC
2.5	1988-87	NGKBZ7HS-10	CHAQL77JC4/ CHAL77JC4
3.0, (2 Cyl)	1997-89	NGKBR6HS	CHAQL82C/CHAL82C
3.3, (1 Cyl)	2003-91	NGKBPR6HS	CHAQL87YC/ CHAL87YCC
3.4 - 4.0 Yachtwin	1974-64	NGKBR6S	CHARJ8C/CHAJ8C
4.0, Ultra, Excel	1988-87	NGKBZ7HS-10	CHAQL77JC4/ CHAL77JC4
4.0, 4R, 4W	1976-69	NGKBR6S	CHARJ8C/CHAJ8C
4.0, (2 Cyl)	1998-89	NGKBR6HS	CHAQL82C/CHAL82C
4.0	1987-77	NGKBR6HS	CHAQL82C/CHAL82C
4.0	1984-81	NGKBZ7HS-10	CHAQL77JC4/ CHAL77JC4
4.5	1985-80	NGKBR6HS	CHAQL82C/CHAL82C
5.0 (4 T / 4 Strokes / 4 Tempi), OHC 128cc	2008-97	NGKDR5HS	
5.0	1998	NGKBR6HS	CHAQL82C/CHAL82C
5.0	1997-90	NGKBR6HS	CHAQL82C/CHAL82C
5.0, 4 T	2008-97	NGKD6HA	
6.0, 6R, 6RL	1976-71	NGKBR6S	CHARJ8C/CHAJ8C
6.0 (4 T / 4 Strokes / 4 Tempi) OHC 128cc	2008-97	NGKDR5HS	
6.0 (2 T / 2 Strokes / 2 Tempi)	1998-77	NGKBR6HS	CHAQL82C/CHAL82C
6.0	1976-65	NGKBR6S	CHARJ8C/CHAJ8C
6.0 (4 T / 4 Strokes / 4 Tempi)	2008-97	NGKD6HA	
6.5 COM	1993-81	NGKBR6HS	CHAQL82C/CHAL82C
7.5	1997-77	NGKBR6HS	CHAQL82C/CHAL82C
8.0 COM	1998-77	NGKBR6HS	CHAQL82C/CHAL82C
8.0 (4 T / 4 Strokes / 4 Tempi) OHC 211cc	2008-96	NGKDR5HS	
8.0 (2 T / 2 Strokes / 2 Tempi)	1998-77	NGKBR6HS	CHAQL82C/CHAL82C
8.0 (4 T / 4 Strokes / 4 Tempi)	1997-95	NGKD6HA	
9.9 (4 T / 4 Strokes / 4 Tempi) OHC 305cc	2008-98	NGKDCPR7E	CHARA8HC
9.9 (4 T / 4 Strokes / 4 Tempi) OHC 302cc	1997-95	NGKDCPR7E	CHARA8HC
9.9. (4 T / 4 Strokes / 4 Tempi) 211cc	1997-96	NGKD6HA	
9.9, (2 T / 2 Strokes / 2 Tempi)	2001-77	NGKBR7HS	CHAQL82C/CHAL82C
9.9	1976-74	NGKB7HS	CHAUL81C
10 COM	2003-94	NGKBR7HS	CHAQL82C/CHAL82C
10 COM	1993-92	NGKBZ7HS-10	CHAQL77JC4/ CHAL77JC4
10R, 10RL, 10E, 10EL	1976-75	NGKBZ7HS-10	CHAQL77JC4/ CHAL77JC4
14 COM	1991-81	NGKBZ7HS-10	CHAQL77JC4/ CHAL77JC4
14	1989-88	NGKBZ7HS-10	CHAQL77JC4/ CHAL77JC4
15 Kero	1998-95	NGKBUHXW-1	CHAUL77V

Modelo Model Modello	Años Years Anni	Ref. NGK	Ref. CHAMPION
15 COM	2001-94	NGKBR7HS	CHAQL82C/CHAL82C
15 COM	1993-92	NGKBZ7HS-10	CHAQL77JC4/ CHAL77JC4
15 (4 T / 4 Strokes / 4 Tempi) OHC 305cc	2003-95	NGKDCPR7E	CHARA8HC
15 (2 T / 2 Strokes / 2 Tempi)	1998-94	NGKBR7HS	CHAQL82C/CHAL82C
15E, 15EL, 15R, 15RL	1976-74	NGKBZ7HS-10	CHAQL77JC4/ CHAL77JC4
15	1992-77	NGKBZ7HS-10	CHAQL77JC4/ CHAL77JC4
15	1976-74	NGKB7HS	CHAUL81C
18 Jet (2 Cyl)	1998-95	NGKBR7HS	CHAQL82C/CHAL82C
18 Fastwin	1973-57	NGKBR6S	CHARJ8C/CHAJ8C
18	1973-57	NGKBR6S	CHARJ8C/CHAJ8C
18	1972-50	NGKBR6S	CHARJ8C/CHAJ8C
20, (2 Cyl)	1998-78	NGKBR7HS	CHAQL82C/CHAL82C
20	1993-78	NGKBR7HS	CHAQL82C/CHAL82C
25, Evinrude 25	1993-78	NGKBZ7HS-10	CHAQL77JC4/ CHAL77JC4
25 COM	1998-81	NGKBUHXW-1	CHAUL77V
25, (3 Cyl)	1998-95	NGKBR6HS	CHAQL82C/CHAL82C
25R, 25RL	1976-73	NGKBR6S	CHARJ8C/CHAJ8C
25E, 25EL	1976-73	NGKBR6S	CHARJ8C/CHAJ8C
25, (2 Cyl)	1998-77	NGKBR7HS	CHAQL82C/CHAL82C
25	1977	NGKBR7HS	CHAQL82C/CHAL82C
25	1976-69	NGKBR6S	CHARJ8C/CHAJ8C
25 (4 T / 4 Strokes / 4 Tempi)	2001-00	NGKDCPR7E	
28 Jet	2003-92	NGKBPZ8HS-10	CHAQL78YC/ CHAL78YC
28, (2 Cyl)	1997-78	NGKBR7HS	CHAQL82C/CHAL82C
30 (4 T / 4 Strokes / 4 Tempi)	2003-00	NGKDCPR7E	CHARA8HC
30, 2 CiL.	1998-78	NGKBR7HS	CHAQL82C/CHAL82C
30 (4 T / 4 Strokes / 4 Tempi) OHC	2003-95	NGKDCPR7E	
35 Jet, (2 Cyl)	2001-93	NGKBPZ8HS-10	CHAQL78YC/ CHAL78YC
35, (3 Cyl)	2001-95	NGKBR6HS	CHAQL82C/CHAL82C
35, (2 Cyl)	1997-77	NGKBZ7HS-10	CHAQL77JC4/ CHAL77JC4
35	1976	NGKBZ7HS-10	CHAQL77JC4/ CHAL77JC4
40 COM45 cid	2003-84	NGKBUHXW-1	CHAUL77V
40 COM43 cid	1990-81	NGKB7HS	CHAUL81C
40 (4 T / 4 Strokes / 4 Tempi) DOHC 815cc	2008-99	NGKDCPR7E	CHARA8HC
40, (2 Cyl)	1998-89	NGKBPZ8HS-10	CHAQL78YC/ CHAL78YC
40, E-TEC	2005-04	NGKPZFR6H	
40, (2 Cyl)	1988-80	NGKBZ7HS-10	CHAQL77JC4/ CHAL77JC4
40	1976-74	NGKB7HS	CHAUL81C
40 (4 T / 4 Strokes / 4 Tempi) DOHC	2003-02	NGKDCPR7E	
45 COM	2003-91	NGKBUHXW-1	CHAUL77V
45 COM	1990-86	NGKBUZHW-2	
48 SPL (2 Cyl)	1997-94	NGKBPZ8HS-10	CHAQL78YC/ CHAL78YC
48, (2 Cyl)	1997-89	NGKBPZ8HS-10	CHAQL78YC/ CHAL78YC
48, (2 Cyl)	1998-90	NGKBZ7HS-10	CHAQL77JC4/ CHAL77JC4
50 (4 T / 4 Strokes / 4 Tempi) DOHC 815cc	2008-99	NGKDCPR7E	CHARA8HC
50, (3 Cyl)	1998-95	NGKBPZ8HS-10	CHAQL78YC/ CHAL78YC
50, (2 Cyl)	2002-89	NGKBPZ8HS-10	CHAQL78YC/ CHAL78YC
50, (2 Cyl)	1988-80	NGKBZ7HS-10	CHAQL77JC4/ CHAL77JC4
50	1979-78	NGKB7HS	CHAUL81C
50 E-TEC	2005-04	NGKPZFR6H	
55 COM, (2 Cyl)	1995-94	NGKBPZ8HS-10	CHAQL78YC/ CHAL78YC
55 COM	2003-86	NGKBUHXW-1	CHAUL77V
55, (2 Cyl)	1989-76	NGKB7HS	CHAUL81C
60 (4 T / 4 Strokes / 4 Tempi) OHC	2008-02	NGKBPR6ES	
60, (3 Cyl) 56 cid	1998-94	NGKBPZ8HS-10	CHAQL78YC/ CHAL78YC
60, (3 Cyl) 56 cid	1993-89	NGKBZ7HS-10	CHAQL77JC4/ CHAL77JC4
60, (3 Cyl), 49 cid	1989-75	NGKBZ7HS-10	CHAQL77JC4/ CHAL77JC4
60, (2 Cyl)	1985-80	NGKBZ7HS-10	CHAQL77JC4/ CHAL77JC4
60 E-TEC	2005-04	NGKPZFR6H	
65, CV4 65 Jet	1997-92	NGKBR7HS	CHAQL82C/CHAL82C
65 COM, (3 Cyl)	1995-94	NGKBPZ8HS-10	CHAQL78YC/ CHAL78YC
65 COM HOLO	1997-88	NGKBUHXW-1	CHAUL77V
65 COM HOLO	1987-84	NGKBZ7HS-10	CHAQL77JC4/ CHAL77JC4
70 (4 T / 4 Strokes / 4 Tempi) OHC 298cc	2003-98	NGKBPR6ES	
70, (3 Cyl) 56 cid	1998-94	NGKBPZ8HS-10	CHAQL78YC/ CHAL78YC
70, (3 Cyl) 56 cid	1993-89	NGKBZ7HS-10	CHAQL77JC4/ CHAL77JC4
70, (3 Cyl) 49 cid	1989-75	NGKBZ7HS-10	CHAQL77JC4/ CHAL77JC4

Modelo Model Modello	Años Years Anni	Ref. NGK	Ref. CHAMPION
75, (3 Cyl) 49 cid	1989-75	NGKBZ7HS-10	CHAQL77JC4/ CHAL77JC4
75 E-TEC	2005-04	NGKPZFR6H	
80 Jet CV4	1998-79	NGKBR7HS	CHAQL82C/CHAL82C
85, V4 Backtroller	1995-94	NGKBR7HS	CHAQL82C/CHAL82C
85	1993-86	NGKBZ7HS-10	CHAQL77JC4/ CHAL77JC4
85	1980-68	NGKB7HS	CHAUL81C
88 CV4 SPL	1997-79	NGKBR7HS	CHAQL82C/CHAL82C
90 Tubojet CV4	1997-94	NGKBR7HS	CHAQL82C/CHAL82C
90 LV4 FFI	1998-00	NGKPZFR6H	CHAXC12PEPB
90 LV4	1998-95	NGKBPZ8HS-10	CHAQL78YC/ CHAL78YC
90 CV4	1998-79	NGKBR7HS	CHAQL82C/CHAL82C
90 E-TEC	2005-04	NGKPZFR6H	
100 V4	1980-79	NGKB7HS	CHAUL81C
100 COM	1998-84	NGKBUHXW-1	CHAUL77V
105 COM LV4	2003-97	NGKBPZ8HS-10	CHAQL78YC/ CHAL78YC
105 LV6 105 Jet	2003-93	NGKBPZ8HS-10	CHAQL78YC/ CHAL78YC
110 CV4	1997-79	NGKBR7HS	CHAQL82C/CHAL82C
112 CV4	1997-79	NGKBR7HS	CHAQL82C/CHAL82C
115 Turbojet CV4	1998-94	NGKB7HS	CHAUL81C
115 LV4 FFI	2003-98	NGKPZFR6H	CHAXC12PEPB
115 Intruder LV4	1998-95	NGKBPZ8HS-10	CHAQL78YC/ CHAL78YC
115 CV4	1998-79	NGKBR7HS	CHAQL82C/CHAL82C
115 COM	1984-75	NGKB7HS	CHAUL81C
115	1993-86	NGKBZ7HS-10	CHAQL77JC4/ CHAL77JC4
115	1979-73	NGKBZ7HS-10	CHAQL77JC4/ CHAL77JC4
115	1985	NGKBUHXW-1	CHAUL77V
120 LV4	2003-85	NGKBPZ8HS-10	CHAQL78YC/ CHAL78YC
125 COM	1972-71	NGKB7HS	CHAUL81C
130 LV4	2003-85	NGKBPZ8HS-10	CHAQL78YC/ CHAL78YC
135	1984-73	NGKBUHXW-1	CHAUL77V
140 LV4	2003-85	NGKBPZ8HS-10	CHAQL78YC/ CHAL78YC
140	1984-73	NGKBUHXW-1	CHAUL77V
150 LV6 FFI	1998-97	NGKPZFR6H	CHAXC12PEPB
150 Intruder LV6	1998-91	NGKBPZ8HS-10	CHAQL78YC/ CHAL78YC
150 CV6	1991-88	NGKBZ7HS-10	CHAQL77JC4/ CHAL77JC4
150 CV6	1987-78	NGKBUHXW-1	CHAUL77V
150 COM LV6	1998-93	NGKBPZ8HS-10	CHAQL78YC/ CHAL78YC
155 CV6	1987-78	NGKBUHXW-1	CHAUL77V
155 COM CV6	1992-89	NGKBUHXW-1	CHAUL77V
175 LV6 FFI	1998	NGKPZFR6H	CHAXC12PEPB
175 Intruder LV6	1998-91	NGKBPZ8HS-10	CHAQL78YC/ CHAL78YC
175 CV6	1991-88	NGKBZ7HS-10	CHAQL77JC4/ CHAL77JC4
175	1987-77	NGKBUHXW-1	CHAUL77V
185	1987-77	NGKBUZ8H	CHAQL16V
185 COM	1993-90	NGKBZ7HS-10	CHAQL77JC4/ CHAL77JC4
200 Vindicator L	1998-94	NGKBPZ8HS-10	CHAQL78YC/ CHAL78YC
200 V6	1993-86	NGKBZ7HS-10	CHAQL77JC4/ CHAL77JC4
200 LV6 FFI	2004-99	NGKPZFR6H	CHAXC12PEPB
200 COM	1998-93	NGKBPZ8HS-10	CHAQL78YC/ CHAL78YC
200 COM	1992	NGKBUHXW-1	CHAUL77V
200	1983-76	NGKBUHXW-1	CHAUL77V
225 Vindicator	1998-94	NGKBPZ8HS-10	CHAQL78YC/ CHAL78YC
225LV6 FFI	2004-99	NGKPZFR6H	CHAXC12PEPB
225	1993-86	NGKBZ7HS-10	CHAQL77JC4/ CHAL77JC4
235	1985-78	NGKBUHXW-1	CHAUL77V
250 V8	1997-85	NGKBPZ8HS-10	CHAQL78YC/ CHAL78YC
275	1988-85	NGKBPZ8HS-10	CHAQL78YC/ CHAL78YC
300 V8	1997-85	NGKBPZ8HS-10	CHAQL78YC/ CHAL78YC

JUEGOS DE CABLES, ALTO RENDIMIENTO
HD SPARK PLUG WIRE SET
KIT CAVI CANDELE, ALTE PRESTAZIONI

Núcleo del cable de Kevlar de 8 mm antimagnético. Funda de silicona amarilla. Terminales bujías con muelle de acero inox. Terminal del distribuidor de cobre. Terminales bobina. Silicona resistente a altas temperaturas. Garantía de 5 años.
Antimagnetic Kevlar core. Yellow silicone boot & jacket. SS snaplock. Brass distributor terminal. Coil terminals. High resistant silicone. 5 year warranty.
Nucleo del cavo di Kevlar da 8 mm antimagnetico. Copertura di silicone gialla. Terminali candele con molle di acciaio inox. Terminale lato spinterogeno in Rame. Terminali bobina. Silicone resistente alle alte temperature. Garanzia di 5 anni.

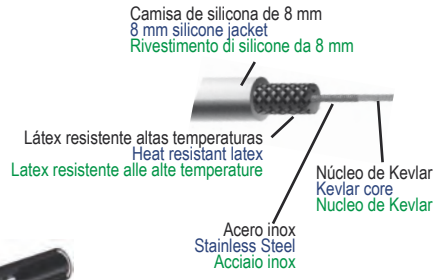

Ref.	R.O.	
REC15-102	4”	10,16 cm
REC15-101	6”	15,24 cm
REC15-103	9”	22,86 cm
REC15-104	12”	30,48 cm





PISTONES
PISTONS
PISTONI

DISEÑOS DE PISTONES
PISTON DESIGNS
DISEGNO DEI PISTONI

Existen tres tipos de diseño diferentes utilizados en los motores Johnson-Evinrude: Crossflow, Loopcharged y 4 Tiempos.
There are three basic piston designs used in Johnson / Evinrude outboard engines: Crossflow, Loopcharged and Four-Stroke.
Esitono tre tipi di disegno diversi utilizzati nei motori Johnson-Evinrude: Crossflow, Loopcharged e 4 Tempi.

CROSSFLOW

Mientras la mezcla de aire y combustible circula a través del cilindro, un deflector dirige la mezcla hacia la cámara de combustión.
As the air / fuel mixture travels through the transfer port and into the cylinder, a deflector, cast into the top of the piston, directs the air / fuel mixture towards the combustion chamber.
Mentre la miscela d’aria e il combustibile circolano attraverso il cilindro il deflettore del pistone dirige la miscela verso la camera di combustione.

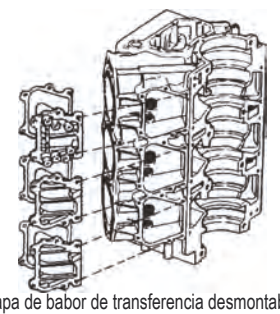

Tapa de babor de transferencia desmontable
Removeable Transfer Port Cover
Carter di sinistra estraibile



Pistón con deflector
Piston with Deflector Top
Pistone con deflettore

LOOPCHARGED

El motor loopcharged tiene una toma de transferencia en la pared del cilindro, de tal forma que dirije la mezcla de aire y combustible hacia la cámara de combustión, arrancando así, sin la necesitadad de un deflector.
A loopcharged engine has a transfer port cast into the cylinder wall in such a way that it will direct the air / fuel mixture towards the combustion chamber and spark plug tip without the need for a piston deflector.
aspirazione nella parete del cilindro in maniera tale da dirigere la miscela d’aria e combustibile verso la camera di combustione, non avendo così la necessità di convogliare la combusitone con il deflettore.

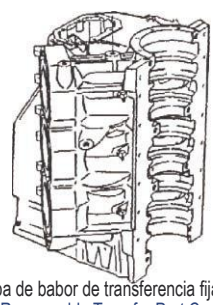

Tapa de babor de transferencia fija
Non-Removeable Transfer Port Cover
Carter di sinistra fisso



Pistón con tapa plana
Piston with Flat Top
Pistone con testa piana

4 TIEMPOS
FOUR-STROKE
4 TEMPI

Los motores de 4 tiempos son bastante nuevos en la industria náutica. Son los favoritos de la mayoría de los fabricantes pues respetan las leyes sobre el medio ambiente. El aceite almacenado en el cárter de estos motores sale disparado hacia las paredes de los pistones y sus aros para su lubricación.
Four-stroke / four-cycle engines are fairly new to the marine industry. They have become the engine design preferred by most marine engine manufacturers to meet government mandated exhaust emission standards. Oil stored in the crankcase of these engines is splashed onto the cylinder walls for piston and ring lubrication.
I motori a 4 tempi sono abbastanza nuovi nell’ industria nautica. Sono i preferiti dalla maggior parte dei fabbricanti perchè rispettano le leggi sull’ ambiente. L’olio è immagazzinato nel carter di questi motori e scorre nelle pareti dei pistoni e delle fasce per la lubrificazione.



Pistón con tapa plana y aro de aceite en la parte inferior
Piston with Flat Top and Oil Ring in the Bottom Position
Pistone con testa piana e paraolio

PISTONES DE PRECISIÓN AJUSTADOS Y EQUILIBRADOS PARA MOTORES FUERABORDAS, INCLUYEN AROS, PASADORES Y BULÓN
HIGH PRECISION AND ADJUSTED PISTONS, BALANCED FOR OUTBOARD ENGINES, INCLUDING RINGS, WRIST PIN AND CIRCLIPS
PISTONI NUOVI STUDIATI PER MOTORI FUORIBORDO. INCLUDONO FASCE ELASTICHE E SPINOTTI

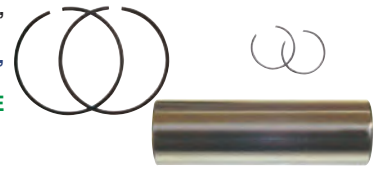

PISTONES CROSSFLOW
CROSSFLOW PISTON
PISTONI CROSSFLOW

Ref.	R.O.		Medida Size Misura
REC5006670	5006670	Pistón/ Piston / Pistoni	2.188" STD
REC386918	386279	Aros / Rings / Fasce	2.188" STD
REC5006662	5006662	Pistón/ Piston / Pistoni	2.218" 030
REC386280	386280	Aros / Rings / Fasce	2.218" 030

MOTORES / ENGINES / MOTORI
(2 Cyl)
9.9 HP (1981-92)
15 HP (1981-92)



Ref.	R.O.		Medida Size Misura
REC5006657	5006657	Pistón/ Piston / Pistoni	3.000" STD
REC396377	396377	Aros / Rings / Fasce	3.000" STD
REC5006664	5006664	Pistón/ Piston / Pistoni	3.030" 030
REC396379	396379	Aros / Rings / Fasce	3.030" 030

MOTORES / ENGINES / MOTORI
(2 Cyl)
20 HP (1981-83)
25 HP (1986-94)
30 HP (1984-94)



Ref.	R.O.		Medida Size Misura
REC5006658	5006658	Pistón/ Piston / Pistoni	3.500" STD
REC394930	394930	Aros / Rings / Fasce	3.500" STD
REC5006669	5006669	Pistón/ Piston / Pistoni	3.530" 030
REC396504	396504	Aros / Rings / Fasce	3.530" 030

MOTORES / ENGINES / MOTORI
V4

85 HP (1979-80)
88 HP (1987-93)
90 HP (1981-93)
100 HP (1984-94)
110 HP (1986-90)
115 HP (1973-85)
135 HP (1974-76)
140 HP (1977-84)
150 HP (1978-91)
175 HP (1977-85)
185 HP (1984-85)
200 HP (1976-83)
235 HP (1978-79)



Ref.	R.O.		Medida Size Misura
WI3176PS		Pistón/ Piston / Pistoni	3.375" STD
WI3176P3		Pistón/ Piston / Pistoni	3.405" 030

MOTORES / ENGINES / MOTORI
V4

85 HP (1974-78)



Ref.	R.O.		Medida Size Misura
REC390509	390509	Aros / Rings / Fasce	3.625" STD
REC5006668	5006668	Pistón/ Piston / Pistoni	3.655" 030
REC390510	390510	Aros / Rings / Fasce	3.655" 030

MOTORES / ENGINES / MOTORI
V4

175 HP (1986-91)
235 HP (1980-85)



PISTONES LOOPCHARGED
LOOPCHARGED PISTON
PISTONI LOOPCHARGED

Ref.	R.O.		Medida Size Misura
REC435546	5006655	Kit Pistón/ Piston Kit / Kit Pistoni	3.187" STD
REC391170	391170	Aros / Rings / Fasce	3.187" STD
REC5006665	5006665	Pistón/ Piston / Pistoni	3.217" 030
REC391416	391416	Aros / Rings / Fasce	3.217" 030

MOTORES / ENGINES / MOTORI
(2 Cyl)
40 HP (1984-94)
45 HP (1994)
48 HP (1987-94)
50 HP (1981-94)
55 HP (1994)
60 HP (1980-85)



Ref.	R.O.		Medida Size Misura
REC5006751	5006751	Pistón/ Piston / Pistoni	3.000" STD
REC396377	396377	Aros / Rings / Fasce	3.000" STD
REC5006666	5006666	Pistón/ Piston / Pistoni	3.030" 030
REC396379	396379	Aros / Rings / Fasce	3.030" 030

MOTORES / ENGINES / MOTORI
(3 Cyl)
60 HP (1986-88)
65 HP COM (1984-86)
70 HP (1976-85)
75 HP (1976-88)



Ref.	R.O.		Medida Size Misura
REC5006701	5006701	Pistón/ Piston / Pistoni	3.187" STD
REC391170	391170	Aros / Rings / Fasce	3.187" STD
REC5006702	5006702	Pistón/ Piston / Pistoni	3.217" 030
REC391416	391416	Aros / Rings / Fasce	3.217" 030

MOTORES / ENGINES / MOTORI
(3 Cyl)
50 HP (1995-98)
60 HP (1989-94)
65 HP (1987-94)
70 HP (1986-94)



Ref.	R.O.		Medida Size Misura
REC5006694	5006694	Pistón/ Piston / Pistoni	3.1875" STD
REC436972	436972	Aros / Rings / Fasce	3.1875" STD
REC5006707	5006707	Pistón/ Piston / Pistoni	3.1875" 020
REC5006696	5006695	Pistón/ Piston / Pistoni	3.1875" 030

MOTORES / ENGINES / MOTORI
(3 Cyl)
60 HP (1994-01)
65 HP (1994-01)
70 HP (1994-01)



Ref.	R.O.		Medida Size Misura
REC436254	436254	Aros / Rings / Fasce	3.685"
REC5006713	5006713	Pistón/ Piston / Pistoni	3.715" STD 030
REC5006711	5006711	Pistón/ Piston / Pistoni	3.715" PORT 030

MOTORES / ENGINES / MOTORI
OCEAN PRO/RUNNER 90°
200 HP / 225 HP (1993-01)
Con carburadores
With carburators
Con carburatori



Ref.	R.O.		Medida Size Misura
REC394930	394930	Aros / Rings / Fasce	3.500"
REC396504	396504	Aros / Rings / Fasce	3.530" 030

MOTORES / ENGINES / MOTORI
V4
120 HP 90° (1985-87)
140 HP 90° (1985-87)

V6
200 HP (1986-87)
225 HP (1986-87)

V8
275 HP (1985-87)
300 HP (1985-87)

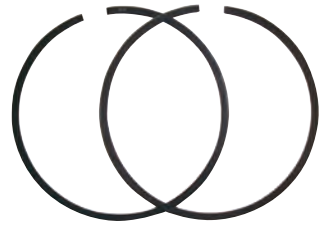

Ref.	R.O.		Medida Size Misura
REC431870	431870	Aros / Rings / Fasce	3.685"

MOTORES / ENGINES / MOTORI
V4
120 HP 90° (1988-94)
140 HP 90° (1988-94)

V6
200 HP 90° (1988-92)
225 HP (1988-92)

V8
250 HP 90° (1991-98)
300 HP 90° (1988-95)

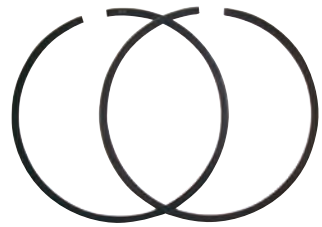

PISTONES 4 TIEMPOS
4 STROKES PISTON
PISTONI 4 TEMPI

SERIE EAGLE / JET EAGLE

Ref.	R.O.		Medida Size Misura
REC5006688	5006688	Pistón/ Piston / Pistoni	3.600" STD
REC5006687	5006687	Pistón/ Piston / Pistoni	3.600" PORT
REC436353	436353	Aros / Rings / Fasce	3.600"
REC5006716	5006716	Pistón/ Piston / Pistoni	3.630" STD 030
REC5006714	5006714	Pistón/ Piston / Pistoni	3.630" PORT 030

MOTORES / ENGINES / MOTORI
V4 60° 90 HP (1995-06)
V6 60° 115 HP (1995-06)

JET EAGLE V4 60° 105 HP (1993-97)
JET EAGLE V6 60°
150 HP (1991-06)
175 HP (1991-06)



SERIE DI / E-TECH

Ref.	R.O.		Medida Size Misura
WI3211PS		Pistón/ Piston / Pistoni	3.601" STD
WI3211P3		Pistón/ Piston / Pistoni	3.631" 030

MOTORES / ENGINES / MOTORI
40, 50, 60, 75, 90 HP (2004-07)



Ref.	R.O.		Medida Size Misura
WI3209PS		Pistón/ Piston / Pistoni	3.583" PORT
WI3209SS		Pistón/ Piston / Pistoni	3.583" STD
WI3209P2		Pistón/ Piston / Pistoni	3.604" PORT 020
WI3209S2		Pistón/ Piston / Pistoni	3.604" STD 020

MOTORES / ENGINES / MOTORI
150 HP, 150 HO, 175 HP (2007-08)
200 HP 60º (2007-08)



Ref.	R.O.		Medida Size Misura
WI3210PS		Pistón/ Piston / Pistoni	3.854" PORT
WI3210SS		Pistón/ Piston / Pistoni	3.854" STD
WI3210P3		Pistón/ Piston / Pistoni	3.884" PORT 030
WI3210S3		Pistón/ Piston / Pistoni	3.884" STD 030

MOTORES / ENGINES / MOTORI
200 HP 90º (2005-08)
225, 250 HP (2006-08)
250 HP 3.0L (2008)



SERIE FITCH

Ref.	R.O.		Medida Size Misura
REC5006728	5006728	Pistón/ Piston / Pistoni	3.600" STD
REC5006727	5006727	Pistón/ Piston / Pistoni	3.600" PORT
REC436353	436353	Aros / Rings / Fasce	3.600"
REC5006730	5006730	Pistón/ Piston / Pistoni	3.630" STD 030

MOTORES / ENGINES / MOTORI
75, 90, 115, 150, 175 HP 60º (2000+)



Ref.	R.O.		Medida Size Misura
WI3180PS		Pistón/ Piston / Pistoni	3.854" PORT
WI3180SS		Pistón/ Piston / Pistoni	3.854" STD
WI3180P3		Pistón/ Piston / Pistoni	3.884" PORT 030
WI3180S3		Pistón/ Piston / Pistoni	3.884" STD 030

MOTORES / ENGINES / MOTORI
3.3L
225, 250 HP (2000-05)



COJINETES BEARINGS CUSCINETTO

COJINETES PRINCIPALES
MAIN BEARING
CUSCINETTI

Ref.	R.O. / OEM
REC395401	395401

MOTORES / ENGINES / MOTORI
9.9 - 15 HP (1974-95)
9.9 - 15 HP (1974-83)

Ø 0.8125



Ref.	R.O. / OEM
REC390900	390900

MOTORES / ENGINES / MOTORI
45 - 60 HP
2 & 3 Cyl



Ref.	R.O. / OEM
REC398529	398529

MOTORES / ENGINES / MOTORI
45 - 60 HP (Modernos / Late models / Moderno)
2 & 3 Cyl



COJINETES CENTRALES
CENTER BEARING
CUSCINETTI CENTRALI

Ref.	R.O. / OEM
REC378252	378252

MOTORES / ENGINES / MOTORI
40C (-1974)
45 - 60 HP (2 Cyl) (-1971)
V4 (3 Cyl) (1962-78)

Ø 1.375



Ref.	R.O. / OEM
REC5007190	387041

MOTORES / ENGINES / MOTORI
V4 Crossflow (-1979)
V6 Crossflow (-1976)
V4-V6 60º

Ø 2.1875



INFERIOR CIGÜEÑAL
LOWER CRANK
CUSCINETTO ALBERO MOTORE INFERIORE

Ref.	R.O. / OEM
REC377139	377139

MOTORES / ENGINES / MOTORI
3 Cyl (1968-94)



CAMISA PARTIDA CENTRAL
CENTER SPLIT SLEEVE
CAMICIA CUSCINETTO CENTRALE

Ref.	R.O. / OEM
REC310433	310433



MOTORES / ENGINES / MOTORI
40C (-1974)
45 - 60 HP (2 Cyl) (-1971)
V4 (3 Cyl) (1962-78)

Ref.	R.O. / OEM
REC352960	320499



MOTORES / ENGINES / MOTORI
V4 Crossflow (-1979)
V6 Crossflow (-1976)
V4-V6 60º

COJINETE BIELA. FINAL PEQUEÑO.
CONNECTING ROAD BEARING. SMALL END.
CUSCINETTO DI BIELLA. FINALE PICCOLO.

Ref.	R.O. / OEM
REC395627	395627



MOTORES / ENGINES / MOTORI
20 - 35 HP (1981-95)
45 - 60 (2 Cyl) (1977-95)
V4 Crossflow (3 Cyl) (-1973)
V6 Crossflow (-1976)
V4, V6 60º

Ref.	R.O. / OEM
REC434844	434844



MOTORES / ENGINES / MOTORI
V4, V6, V8 90º LoopedCharged (1985+)

COJINETE BIELA. FINAL GRANDE.
CONNECTING ROAD BEARING. BIG END.
CUSCINETTO DI BIELLA. FINALE GRANDE.

Ref.	R.O. / OEM	
REC31-17514A2	437088	
REC764102	387139, 387142	Aguja / Needless / Aghi



MOTORES / ENGINES / MOTORI
20 - 35 HP (1976-95)
46 - 60 HP (2 Cyl) (1971-94)
3 Cyl (1968-93)
V4 (1961-73)

Ø 1.1825 - 30 mm

Ref.	R.O. / OEM	
REC387787	387787	
REC764102	387139, 387142	Aguja / Needless / Aghi



MOTORES / ENGINES / MOTORI
V4 Crossflow (-1979)
V6 Crossflow (-1976)
V4-V6 60º

Ø 1.375

Ref.	R.O. / OEM
REC878763	396041

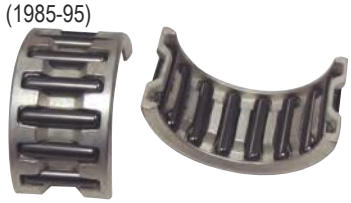

MOTORES / ENGINES / MOTORI
V4, V6, V8 90º LoopedCharged (1985-95)

Ø 1.500

COJINETES CABEZA MOTOR
POWERHEAD BEARING
CUSCINETTI TESTA MOTORE

Ref.	R.O. / OEM
REC764102	387139



Ref.	R.O. / OEM
REC31-02748	382481



Ref.	R.O. / OEM
REC31-02799	393896



Ref.	R.O. / OEM
REC5007190	387041



Ref.	R.O. / OEM
REC31-02798	389613



Ref.	R.O. / OEM
REC388344	388344



Ref.	R.O. / OEM
REC31-02803	385503



Ref.	R.O. / OEM
REC31-02806	390641



Ref.	R.O. / OEM
REC31-02747	330854



GUÍA COJINETES
BEARINGS APPLICATION
GUIDA CUSCINETTO

HP	AÑO YEAR ANNO	PRINCIPAL MAIN PRINCIPALE	CENTRAL CENTER CUSCINETTO	CAMISA CENTRAL SPLIT SLEEVE CAMICIA CENTRALE	INFERIOR CIGÜEÑAL LOWER CRANK INFERIORE ALBERO MOTORE	BIELA CONNEC. ROD BIELLA	BIELA CON AGUJAS CONNEC. ROD, NEEDLE BIELLA, AGHI	AGUJAS NEEDLES AGHI
9.9	1974-83		REC395401				REC395401	
9.9	1984-97						REC395401	
10	1981						REC395401	
10 COM	1989-91						REC395401	
10 COM	1994						REC395401	
14	1981		REC395401				REC395401	
14 COM	1989-91						REC395401	
15	1974-83		REC395401				REC395401	
15	1984-97						REC395401	
15 COM	1994						REC395401	
18	1970-73							REC764102
18 JET	1996-97	REC31-02799	REC31-02798		REC31-02747	REC395627	REC388344	
20	1981-84	REC31-02748	REC31-02798		REC31-02747	REC395627	REC388344	REC764102
20	1985-97	REC31-02799	REC31-02798		REC31-02747	REC395627	REC388344	
25	1970-76							REC764102
25	1977	REC31-02748			REC31-02747		REC388344	REC764102
25	1978-80	REC31-02748	REC31-02798		REC31-02747		REC388344	REC764102
25	1981-84	REC31-02748	REC31-02798		REC31-02747	REC395627	REC388344	REC764102
25 (excepto modelos D except D models eccetto modelli D)	1985-97	REC31-02799	REC31-02798		REC31-02747	REC395627	REC388344	
25 COM	1982-84	REC31-02748	REC31-02798		REC31-02747	REC395627	REC388344	REC764102
25 COM	1985-97	REC31-02799	REC31-02798		REC31-02747	REC395627	REC388344	
28	1987-97	REC31-02799	REC31-02798		REC31-02747	REC395627	REC388344	
30	1984	REC31-02748	REC31-02798		REC31-02747	REC395627	REC388344	REC764102
30	1985-97	REC31-02799	REC31-02798		REC31-02747	REC395627	REC388344	
33	1970						REC388344	REC764102
35	1976-80	REC31-02748			REC31-02747		REC388344	REC764102
35	1981-84	REC31-02748	REC31-02798		REC31-02747	REC395627	REC388344	REC764102
35	1985-97	REC31-02799	REC31-02798		REC31-02747	REC395627	REC388344	
40	1971-73						REC388344	REC764102
40	1974-76		REC378252	REC310433	REC377139		REC388344	REC764102
40	1983		REC378252	REC310433	REC377139		REC388344	REC764102
40	1984-86	REC390900	REC378252	REC310433	REC377139	REC395627	REC388344	
40	1987-97	REC398529	REC378252	REC310433	REC377139	REC395627	REC388344	
40 COM	1982-83		REC378252	REC310433	REC377139		REC388344	
40 COM	1984-85	REC390900	REC378252	REC310433	REC377139		REC388344	
40 COM	1989-90	REC398529	REC378252	REC310433	REC377139		REC388344	
40 COM	1994	REC398529	REC378252	REC310433		REC395627	REC388344	
40 COM	1995-00	REC398529	REC378252	REC310433		REC395627		
45 COM	1985-86	REC390900	REC378252	REC310433	REC377139	REC395627	REC388344	
45 COM	1987-94	REC390900	REC378252	REC310433	REC377139	REC395627	REC388344	
45 COM	1995-97	REC398529	REC378252	REC310433		REC395627		
45 SS	1987-90	REC390900	REC378252	REC310433	REC377139	REC395627	REC388344	
48	1987	REC390900	REC378252	REC310433	REC377139	REC395627	REC388344	
48	1988-96	REC398529	REC378252	REC310433	REC377139	REC395627	REC388344	
50	1979-83	REC390900	REC378252	REC310433	REC377139	REC395627	REC388344	REC764102
50	1984-86	REC390900	REC378252	REC310433	REC377139	REC395627	REC388344	
50 (2 Cyl)	1987-00	REC398529	REC378252	REC310433	REC377139	REC395627	REC388344	
50 (3 Cyl)	1995-00	REC398529	REC378252	REC310433	REC377139	REC395627		
55	1976-81	REC390900	REC378252	REC310433	REC377139	REC395627	REC388344	REC764102
55 COM	1982	REC390900	REC378252	REC310433	REC377139	REC395627	REC388344	REC764102
55 COM	1983-86	REC390900	REC378252	REC310433	REC377139	REC395627	REC388344	
55 COM	1987-94	REC398529	REC378252	REC310433	REC377139	REC395627	REC388344	
55 COM	1995-00	REC398529	REC378252	REC310433		REC395627		
60	1980-83	REC390900	REC378252	REC310433	REC377139	REC395627	REC388344	REC764102
60	1984-85	REC390900	REC378252	REC310433	REC377139	REC395627	REC388344	
60	1986-90	REC390900	REC378252	REC310433	REC377139	REC395627	REC388344	
60	1991-93	REC398529	REC378252	REC310433	REC377139	REC395627	REC388344	
60	1994-01	REC398529	REC378252	REC310433	REC377139	REC395627		
SST-60	1989-90	REC390900	REC378252	REC310433	REC377139	REC395627	REC388344	
65	1972-73	REC390900	REC378252	REC310433	REC377139		REC388344	REC764102
65 COM	1984	REC390900	REC378252	REC310433	REC377139	REC395627	REC388344	REC764102
65 COM	1985-90	REC390900	REC378252	REC310433	REC377139	REC395627	REC388344	
65 COM	1991-93	REC398529	REC378252	REC310433		REC395627	REC388344	
65 COM	1994-01	REC398529	REC378252	REC310433		REC395627		
70	1974-75	REC390900	REC378252	REC310433	REC377139		REC388344	REC764102
70	1976-84	REC390900	REC378252	REC310433	REC377139	REC395627	REC388344	REC764102
70	1985-90	REC390900	REC378252	REC310433	REC377139	REC395627	REC388344	

HP	AÑO YEAR ANNO	PRINCIPAL MAIN PRINCIPALE	CENTRAL CENTER CUSCINETTO	CAMISA CENTRAL SPLIT SLEEVE CAMICIA CENTRALE	INFERIOR CIGÜEÑAL LOWER CRANK INFERIORE ALBERO MOTORE	BIELA CONNEC. ROD BIELLA	BIELA CON AGUJAS CONNEC. ROD, NEEDLE BIELLA, AGHI	AGUJAS NEEDLES AGHI
70	1991-93	REC398529	REC378252	REC310433	REC377139	REC395627	REC388344	
70	1994-97	REC398529	REC378252	REC310433	REC377139	REC395627		
75	1975	REC390900	REC378252	REC310433	REC377139		REC388344	REC764102
75	1976-84	REC390900	REC378252	REC310433	REC377139	REC395627	REC388344	REC764102
75	1985-88	REC390900	REC378252	REC310433	REC377139	REC395627	REC388344	
80 JET	1992-98		REC5007190	REC352960	REC31-02803	REC395627	REC387787	
85	1968-72		REC378252	REC310433	REC377139		REC388344	REC764102
85	1973		REC378252	REC310433	REC31-02803	REC395627	REC388344	REC764102
85	1974-78		REC378252	REC310433	REC31-02803	REC395627	REC387787	
85	1979-80		REC5007190	REC352960	REC31-02803	REC395627	REC387787	
85	1991-95		REC5007190	REC352960	REC31-02803	REC395627	REC387787	
88	1987-96		REC5007190	REC352960	REC31-02803	REC395627	REC387787	
90 (90° V)	1981-03		REC5007190	REC352960	REC31-02803	REC395627	REC387787	
90 (60° V)	1995-03		REC5007190	REC352960			REC387787	
90 JET	1994-95		REC5007190	REC352960	REC31-02803	REC395627	REC387787	
100	1979-80		REC5007190	REC352960	REC31-02803	REC395627	REC387787	
100	1990-94		REC5007190	REC352960	REC31-02803	REC395627	REC387787	
100 COM	1984-05		REC5007190	REC352960	REC31-02803	REC395627	REC387787	
110	1986-89		REC5007190	REC352960	REC31-02803	REC395627	REC387787	
115	1994-96		REC5007190	REC352960	REC31-02803	REC395627	REC387787	
115	1974-78		REC378252	REC310433	REC31-02803	REC395627	REC387787	
115	1979-85		REC5007190	REC352960	REC31-02803	REC395627	REC387787	
115 (90° V)	1990-06		REC5007190	REC352960	REC31-02803	REC395627	REC387787	
115 (60° V)	1995-06		REC5007190	REC352960			REC387787	
115 JET	1994-06		REC5007190	REC352960	REC31-02803	REC395627	REC387787	
120	1985-94		REC5007190	REC352960	REC31-02806	REC434844	REC878763	
125	1971-72		REC378252	REC310433	REC377139		REC388344	REC764102
125 COM	1989-95		REC5007190	REC352960	REC31-02806	REC434844	REC878763	
125 ESX	1991-94		REC5007190	REC352960	REC31-02806	REC434844	REC878763	
130	1994-00		REC5007190	REC352960	REC31-02806	REC434844	REC878763	
135	1974-76		REC378252	REC310433	REC31-02803	REC395627	REC387787	
140	1977-78		REC378252	REC310433	REC31-02803	REC395627	REC387787	
140	1979-84		REC5007190	REC352960	REC31-02803	REC395627	REC387787	
140	1985-94		REC5007190	REC352960	REC31-02806	REC434844	REC878763	
150	1978-91		REC5007190	REC352960	REC31-02803	REC395627	REC387787	REC764102
150 (60° V)	1991-06		REC5007190	REC352960			REC387787	
150 COM (60° V)	1993-95		REC5007190	REC352960			REC387787	
155 COM	1984-92		REC5007190	REC352960	REC31-02803	REC395627	REC387787	REC764102
175	1977-91		REC5007190	REC352960	REC31-02803	REC395627	REC387787	REC764102
175 (60° V)	1991-97		REC5007190	REC352960			REC387787	
185	1984-85		REC5007190	REC352960	REC31-02803	REC395627	REC387787	REC764102
185	1990-94		REC5007190	REC352960	REC31-02806	REC434844	REC878763	
200	1976-83		REC5007190	REC352960	REC31-02803	REC395627	REC387787	REC764102
200	1986-06		REC5007190	REC352960	REC31-02806	REC434844	REC878763	
200 COM	1990		REC5007190	REC352960	REC31-02806	REC434844	REC878763	
200 COM	1994		REC5007190	REC352960	REC31-02806	REC434844	REC878763	
225	1986-06		REC5007190	REC352960	REC31-02806	REC434844	REC878763	
235	1978-85		REC5007190	REC352960	REC31-02803	REC395627	REC387787	REC764102
250	1991-95		REC5007190	REC352960	REC31-02806	REC434844	REC878763	
250	1997		REC5007190	REC352960	REC31-02806	REC434844	REC878763	
275	1985-88		REC5007190	REC352960	REC31-02806	REC434844	REC878763	
3.6L	1985-87		REC5007190	REC352960	REC31-02806	REC434844	REC878763	
300	1988-95		REC5007190	REC352960	REC31-02806	REC434844	REC878763	

CIGÜEÑAL
CRANKSHAFT
ALBERO MOTORE

Ref.	R.O. / OEM
REC0334665	334665

MOTORES / ENGINES / MOTORI
60 (1989-92)
65 COM (1989-92)
70 (1989-95)



BIELAS
CONNECTING ROD
BIELLE

Ref.	R.O. / OEM
REC5004705	394488

MOTORES / ENGINES / MOTORI
V4 Loopcharged, V6



Ref.	R.O. / OEM
REC395861	395861

MOTORES / ENGINES / MOTORI
30 HP (1999-01)
40 HP (1985-02)
45 HP (1986-87, 1990-97)
48 HP (1987-96)
50 HP (1985-02)
55 HP (1985-96, 1999-01)
60 HP (1985)



Ref.	R.O. / OEM
REC394462	394462

MOTORES / ENGINES / MOTORI
40 HP (1999-01)
50 HP (1995-98)
60 HP (1989-01)
70 HP (1986-01)



KIT RETENES
OIL SEALS SET
KIT PARAOLIO

Ref.	R.O. / OEM
REC18-4332	

MOTORES / ENGINES / MOTORI
9.9 - 15 HP



Ref.	R.O. / OEM
REC18-8355	

MOTORES / ENGINES / MOTORI
20 - 30AC, TE, E (1990)
20 35R / 25 COM (1990)
25, 28, 32R, TE, RE (1991-92)
20 - 35 R, 25, 30TE, 20 -30E (1996)
20 - 30AC, E, 25 COM, 28 (1994-96)



Ref.	R.O. / OEM
REC18-4329	

MOTORES / ENGINES / MOTORI
20 HP (1981-89)
25 HP (1977-89)
28 HP (1986-88)
30 HP (1984-89)
35 HP (1976-89)

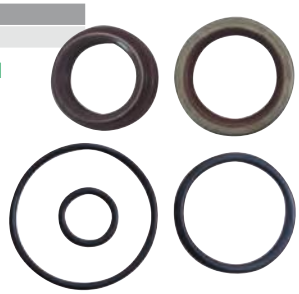

Ref.	R.O. / OEM
REC18-4330	

MOTORES / ENGINES / MOTORI
40 - 75 HP



Ref.	R.O. / OEM
REC18-4331	

MOTORES / ENGINES / MOTORI
CrossFlow V4 - V6



RETÉN INFERIOR CIGÜEÑAL
SEAL LOWER CRANKSHAFT
PARAOLIO INFERIORE
ALBERO MOTORE

Ref.	R.O. / OEM
REC340559	340559, 034559, 0778417

MOTORES / ENGINES / MOTORI
E/J 40 HP - 200 HP (1994+)



GUÍA RETENES
CRANKSHAFT APPLICATION
GUIDA PARAOLIO

HP	AÑO YEAR ANNO	SUPERIOR UPPER SUPERIORE	UNIDS UNITS UNITÀ	INFERIOR LOWER INFERIORE	UNIDS UNITS UNITÀ
9.9	1974-83			REC321831	1
9.9	1984-95			REC321831 / REC321788	1
10	1981			REC321831	
10	1989			REC321831 / REC321788	1
14	1988-90			REC321831 / REC321788	1
15	1974-83			REC87670	1
15	1984-95			REC321831 / REC321788	1
18	1957	REC321467	1		
18	1958-73	REC767970	1		
25	1969-76	REC767970	1		
40	1960-61	REC767970	1		
40	1974-76	REC321895	1	REC330137	1
40 C	1981-86	REC321895	1	REC330137	2
40	1984-85	REC321895	1	REC330137	1
40 (AR,AE,AT)	1988	REC321895	1		
40	1986-89	REC321895	1		
45 C	1985-95	REC321895	1		
48	1988-95	REC321895	1	REC330327 (Interior / Inner / Interiore)	1
50	1971-80	REC321895	1	REC330137	1
50/60	1981-89	REC321895	1	REC330137	1
50	1990-95	REC321895	1	REC330327 (Interior / Inner / Interiore)	1
55	1968-69	REC321895	1	REC330137	1
55, 55 C	1976-85	REC321895	1	REC330137	1
55 C	1986-95	REC321895	1		
60	1970	REC321895	1	REC330137	1
60 (3-Cyl.)	1971	REC321895	1	REC330137	1
60	1980-83	REC321895	1	REC330137	1
60 SST	1989	REC321895	1	REC330137	1
60 SST	1990	REC321895	1		
60 (3-Cyl.)	1987-95	REC321895	1		
65 (Manual)	1968	REC321895	1		
65 (3-Cyl.)	1972-73	REC321895	1	REC330137	1
65 C	1984-89	REC321895	1	REC330137	1
70 (Large)	1974-85	REC321895	1	REC330137	1
70 (Large)	1986-95	REC321895	1		
70 (Small)	1977-85	REC321895	1		
75 (Large)	1975-87	REC321895	1		
75 (Small)	1975-84	REC321895	1	REC330137	1
85	1969-72	REC339620	1	REC330137	1
85	1973-80	REC339620	2	REC330137	1
88	1987-94	REC339620	2		
90	1981-83	REC339620	2	REC330137	1
90	1984-94	REC329923	1		
90 Seadrive	1985-90	REC339620	2	REC330137	1
100	1971-72	REC339620	1	REC330137	1
100	1979-80	REC339620	2	REC330137	1
100 C	1984-90	REC339620	2		
110	1986-88	REC339620	2	REC330137	1
115	1969-83	REC339620	1	REC330137	1
115	1984-85	REC339620	2	REC330137	1

HP	AÑO YEAR ANNO	SUPERIOR UPPER SUPERIORE	UNIDS UNITS UNITÀ	INFERIOR LOWER INFERIORE	UNIDS UNITS UNITÀ
115	1990-94	REC339620	2		
120	1985-94	REC339620	2	REC353076	2
125	1971-72	REC339620	1	REC330137	1
125 C	1989	REC339620	2	REC353076	1
125 C (ESX)	1989	REC329923	1	REC353076	1
135	1973-76	REC339620	2	REC330137	1
140	1977-84	REC339620	2	REC330137	1
140	1985-94	REC339620	2	REC353076	2
140 TX	1989	REC339620	2	REC353076	2
150	1978-83	REC339620	2	REC353076	2
150	1984	REC339620	2		
155 C	1984-85	REC339620	2	REC330137	1
155 C	1986-90	REC339620	2		
175	1977-85	REC339620	2	REC330137	1
175	1986-90	REC339620	2		
185	1984-85	REC339620	2	REC330137	1
185	1990	REC339620	2	REC353076	1
200	1976-83	REC339620	2	REC330137	1
200	1984-85	REC339620	2		
200,225	1986-90	REC339620	2	REC353076	2
235	1978-85	REC339620	2	REC330137	1
275	1985-88	REC339620	2	REC353076	2
3.6L, 300	1985-90	REC339620	2	REC353076	2

JUNTA DE CULATA
GASKET CYLINDER HEAD
GUARNIZIONE TESTATA

4 TIEMPOS / STROKES — JUNTA DE CULATA / GASKET CYLINDER HEAD / GUARNIZIONE TESTATA

Ref.	R.O. / OEM
REC11141-97J02	5037490

MOTORES / ENGINES / MOTORI
2 HP



Ref.	R.O. / OEM
REC11141-93E20	5033046

MOTORES / ENGINES / MOTORI
9.9 & 15 HP



Ref.	R.O. / OEM
REC11141-95J00	5036802

MOTORES / ENGINES / MOTORI
25 HP



Ref.	R.O. / OEM
REC11141-90J01	5033639

MOTORES / ENGINES / MOTORI
90 & 115 HP

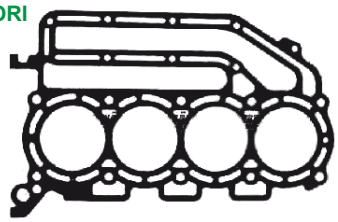

Ref.	R.O. / OEM
REC11141-92J01	5034644

MOTORES / ENGINES / MOTORI
140 HP

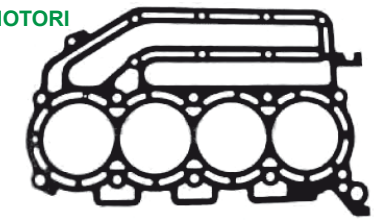

Ref.	R.O. / OEM
REC11141-93J10	5036629

MOTORES / ENGINES / MOTORI
200 & 225 HP



Ref.	R.O. / OEM
REC11142-93J10	5035971

MOTORES / ENGINES / MOTORI
200 & 225 HP



2 TIEMPOS / STROKES — JUNTA DE CULATA / GASKET CYLINDER HEAD / GUARNIZIONE TESTATA

Ref.	R.O. / OEM
REC313782	313782



Ref.	R.O. / OEM
REC329419	329419



Ref.	R.O. / OEM
REC330818	330818



Ref.	R.O. / OEM
REC335359	335359, 327795



Ref.	R.O. / OEM
REC328623	328623



Ref.	R.O. / OEM
REC318358	318358



Ref.	R.O. / OEM
REC203130	203130

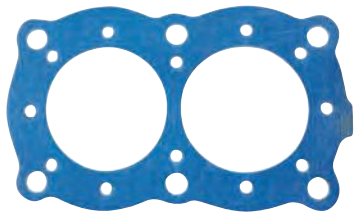

Ref.	R.O. / OEM
REC802307	332010



Ref.	R.O. / OEM
REC802288	325273



Ref.	R.O. / OEM
REC338222	338222



Ref.	R.O. / OEM
REC340115	340115



Ref.	R.O. / OEM
REC319633	319633



Ref.	R.O. / OEM
REC329103	329103



Ref.	R.O. / OEM
REC332819	332819



Ref.	R.O. / OEM
REC307069	307069



Ref.	R.O. / OEM
REC335361	335361, 325647



Ref.	R.O. / OEM
REC332817	332817



Ref.	R.O. / OEM
REC332816	332816

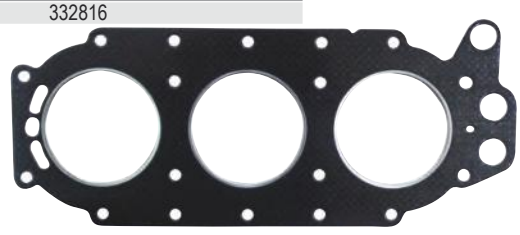

Ref.	R.O. / OEM
REC878846	313413

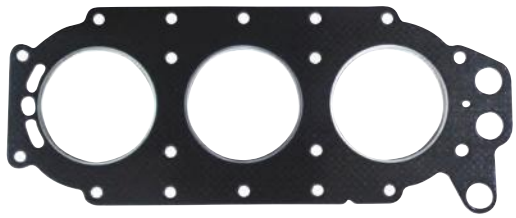

Ref.	R.O. / OEM
REC345257	345257



Ref.	R.O. / OEM
REC333670	334726, 333670



Ref.	R.O. / OEM
REC331211	331211



Ref.	R.O. / OEM
REC329836	329836



Ref.	R.O. / OEM
REC332818	332818



Ref.	R.O. / OEM
REC766779	335360, 320745



Ref.	R.O. / OEM
REC340116	340116, 333554



GUÍA JUNTAS CULATA
GASKET CYLINDER GUIDE
GUIDA GUARNIZIONE TESTATA

HP	AÑO YEAR ANNO	REF
2 Colt, Junior	1969-90	REC313782
4	1968-80	REC203130
2.5, 3, 4, 4.5, Ultra, Excel 4	1981-98	REC802307
5, 5.5, 6	1959-73	REC329103
6	1980-98	REC802288
9.9, 15 (164 cc)	1974-92	REC330818
9.9, 15 (255 cc)	1993-99	REC338222
35 (521 cc)	1976-78	REC319633
20, 25, 28, 30, 35 (521 cc)	1979-00	REC329419
40	1960-76	REC307069
40, 40 COMM (719 cc)	1968-86	REC307069
40, 45, 48, 50, 55, 60 (737 cc)	1976-01	REC335359
55, 60, 65	1968-73	REC878846
60, 3 cyl. (814 cc)	1986-89	REC878846
60, 3 cil. (913 cc)	1974-85	REC878846
60,65	1970-73	REC332816
70, 3 cil. (814 cc)	1989-01	REC329836
70, 3 cil. (913 cc)	1986-01	REC329836
75, 3 cil. (814 cc)	1975-89	REC878846
75, 3 cil. (814 cc)	1975-78	REC332816

HP	AÑO YEAR ANNO	REF
115,135	1973	REC318358
115, 135, 140, V4 Crossflow	1973-78	REC318358
85, 88, 90, 100, 110, 115, V4 Crossf.	1978-94	REC318358
115, V4 Crossflow	1985	REC332819
135, 140, V4 Crossflow	1973-84	REC332819
140, V4 Crossflow	1977-84	REC318358
120, 140, V4 Loopcharged	1985-87	REC328623
120, 130, 140, V4 Loopcharged, 2 L	1988-94	REC340115
150, 155, 175, 185, 200 Cross Flow	1976-85	REC332817
175, V6 Crossflow	1986-92	REC335361
200, 225, V6 Loopcharged	1986-87	REC331211
200, 225 Loopcharged V6, 3 L	1988-93	REC333670
200, 225, 250, V6 Loopcharged, 3 L	1994-01	REC345257
235, V6 Crossflow	1978-79	REC766779
235, V6 Crossflow	1980-85	REC335361
235, V6 Crossflow	1978-79	REC332817
235, V6 Crossflow	1980-85	REC332818
2.6XP-GT, V6 Crossflow	1983-85	REC332818
250, 275, 300, V8 Loopcharged, 4 L	1988-93	REC340116
300, V8 Loopcharged, 4 L	1993-94	REC340116

GUÍA JUNTAS CULATA
GASKET CYLINDER GUIDE
GUIDA GUARNIZIONE TESTATA

4 STROKES TIEMPOS

HP	AÑO YEAR ANNO	R.O.	REF	ESTRIBOR STB TRIBORDO	BABOR PORT BABORDO
J2R4SUC	2007	5037490	**REC11141-97J02**		
J10	2002-04	5033046	**REC11141-93E20**		
J15	2002-04	5033046	**REC11141-93E20**		
J/BJ25	2006-07	5036802	**REC11141-95J00**		
J90/BJ90	2003-06	5033639	**REC11141-90J01**		
J115/BJ115	2003-06	5033639	**REC11141-90J01**		
J140/BJ140	2004-05	5034644	**REC11141-92J01**		
BJ200	2006	5036629-5035971		**REC11141-93J10**	**REC11142-93J10**
BJ225	2006	5036629-5035971		**REC11141-93J10**	**REC11142-93J10**

KIT JUNTAS MOTOR
POWERHEAD GASKET SETS
KIT GUARNIZIONI MOTORE

Ref.	R.O. / OEM
REC802113	394546

MOTORES / ENGINES / MOTORI
9.9 - 15 HP (1984-92)

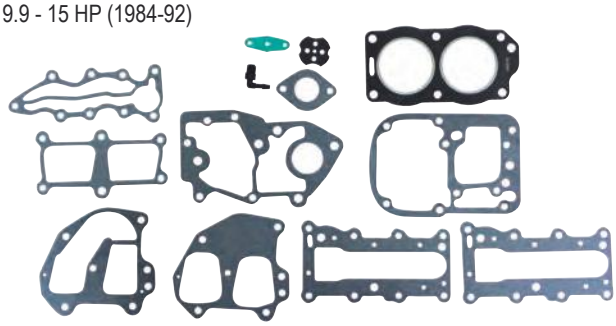

Ref.	R.O. / OEM
REC436358	436358

MOTORES / ENGINES / MOTORI
9.9 - 15 HP (1993-99)

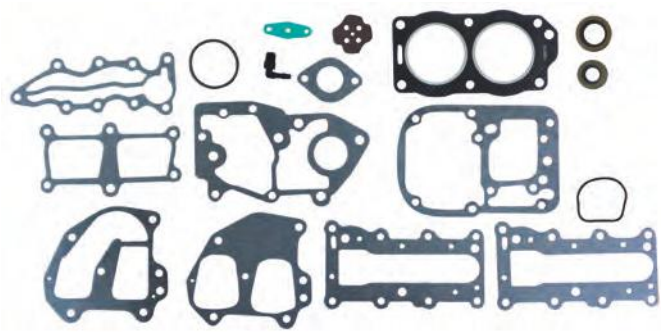

Ref.	R.O. / OEM
REC802133	433941, 392567, 392615

MOTORES / ENGINES / MOTORI
20 - 30 HP Crossflow (1996-99)

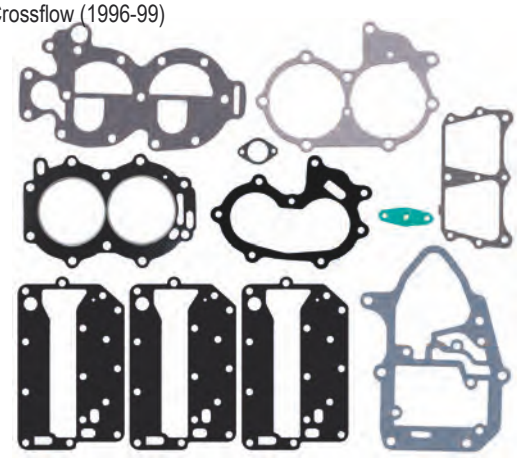

Ref.	R.O. / OEM
REC439083	393433, 439083

MOTORES / ENGINES / MOTORI
40 - 60 HP (2 cyl)
Loopcharged (1998-01)

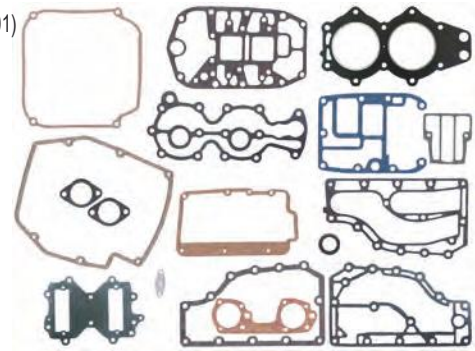

Ref.	R.O. / OEM
REC5005907	5005907

MOTORES / ENGINES / MOTORI
E-TEC (2 cyl en línea / inline / in linea)
E40 - E65 HP (2004+)

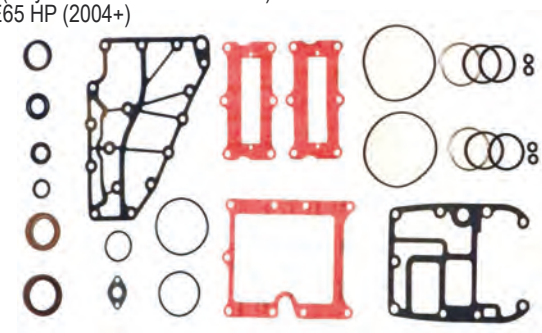

Ref.	R.O. / OEM
REC439084	385416, 390078

MOTORES / ENGINES / MOTORI
60 - 75 HP (3 cyl) (1979-88)

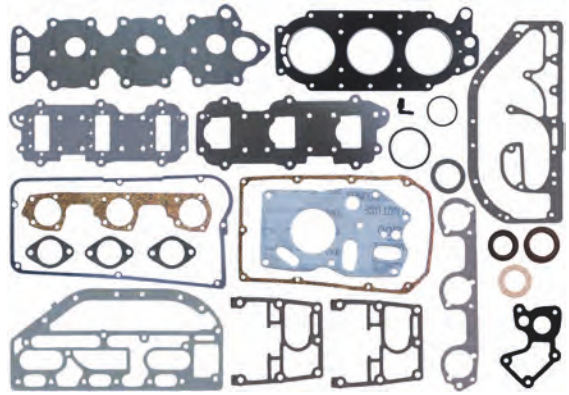

Ref.	R.O. / OEM
REC39390	398047, 438904

MOTORES / ENGINES / MOTORI
60 - 70 HP (3 cyl) (1986-01)

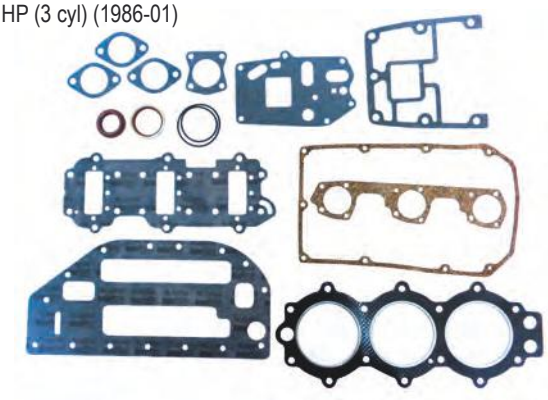

Ref.	R.O. / OEM
REC5005931	5005931

MOTORES / ENGINES / MOTORI
E-TEC (4 cyl en línea / inline / in linea)
E75, E90 HP (2004+)

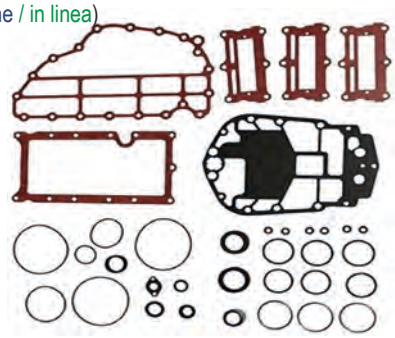

Ref.	R.O. / OEM
REC432570	432570

MOTORES / ENGINES / MOTORI
120 - 140 HP 90º V4 Loopcharged (1988-99)

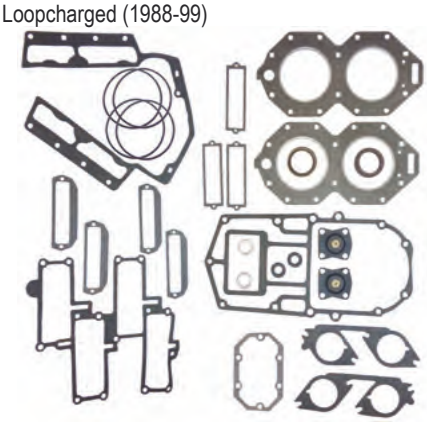

Ref.	R.O. / OEM
REC434381	434381, 394885

MOTORES / ENGINES / MOTORI
175, 235 HP, V6 Crossflow (1980-91)

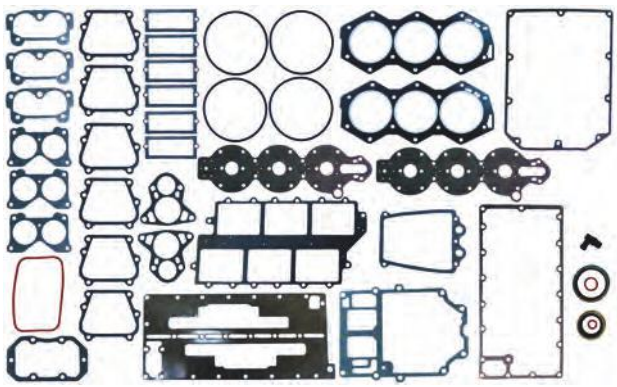

Ref.	R.O. / OEM
REC5007850	5007850

MOTORES / ENGINES / MOTORI
V4 E-TEC
E115, E130 HP (2009+)

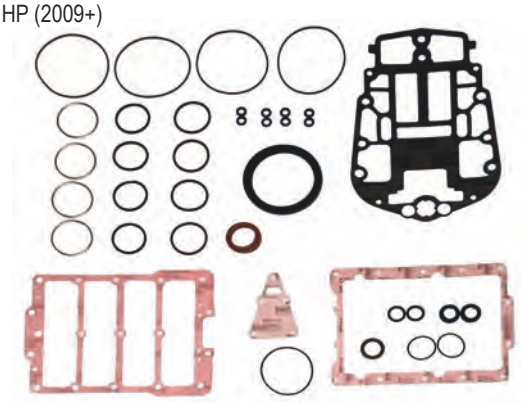

Ref.	R.O. / OEM
REC439085	389556, 391300, 439085

MOTORES / ENGINES / MOTORI
90º V4 Crossflow (1978-94)

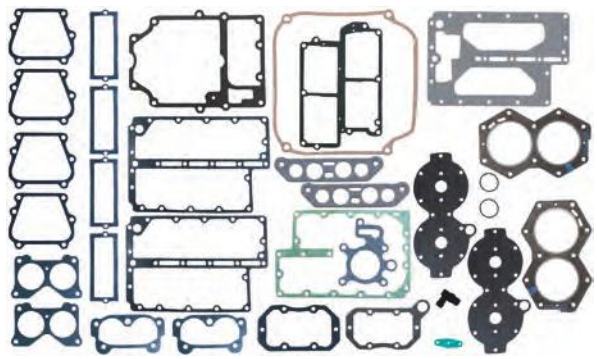

Ref.	R.O. / OEM
REC5000400	5000400

MOTORES / ENGINES / MOTORI
60º V4 Loopcharge EFI 90-115 HP (1998+)

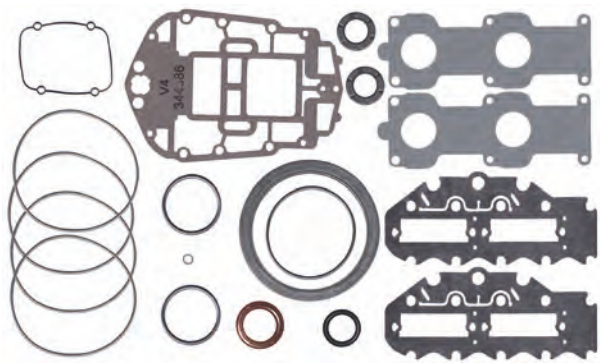

Ref.	R.O. / OEM
REC396750	396750

MOTORES / ENGINES / MOTORI
90º V4 Loopcharge Carb. 120, 140 HP (1985-87)

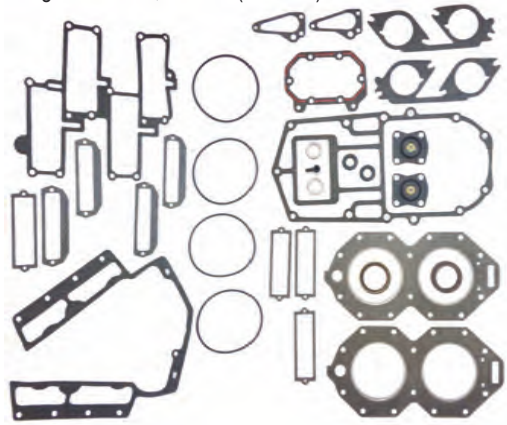

Ref.	R.O. / OEM
REC439559	439559

MOTORES / ENGINES / MOTORI
60º V4 Loopcharge Carb. 90-115 HP (1995+)

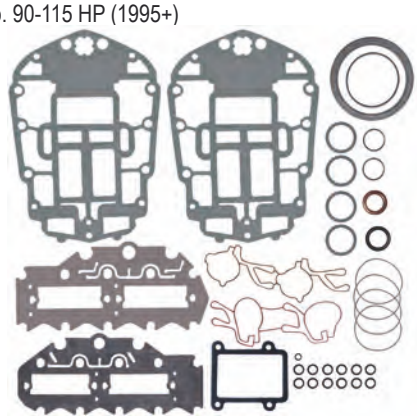

Ref.	R.O. / OEM
REC436891	432571, 436891

MOTORES / ENGINES / MOTORI
90º V6 Loopcharge. Carb. 200-225 HP (1988-93)

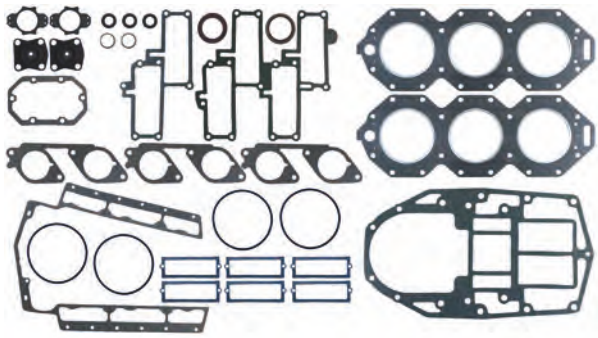

Ref.	R.O. / OEM
REC5007129	5007129

MOTORES / ENGINES / MOTORI
V6 E-TEC
E150, E175, E200 HP (2006+)

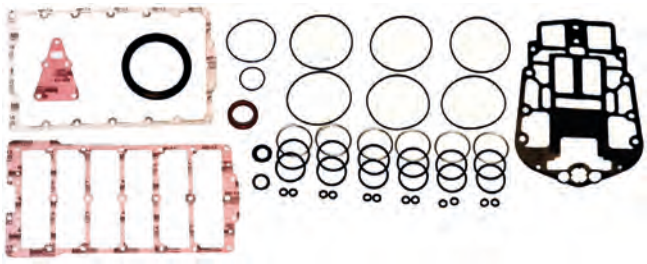

Ref.	R.O. / OEM
REC437155	437155

MOTORES / ENGINES / MOTORI
V6 Loopcharge 150 - 175 HP (1991-99)

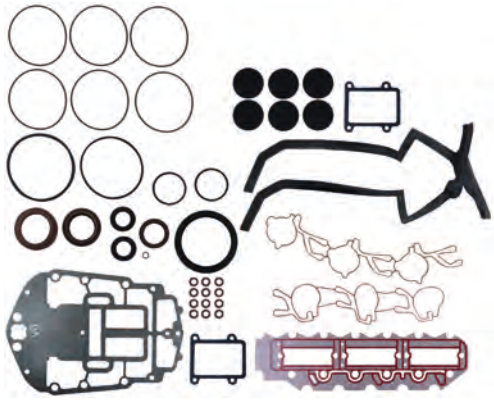

Ref.	R.O. / OEM
REC398172	398172

MOTORES / ENGINES / MOTORI
90º V6 Loopcharge Carb. 200, 225 HP (1986-87)

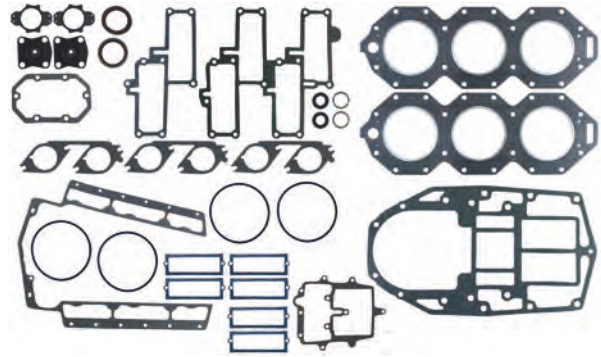

Ref.	R.O. / OEM
REC437725	437725

MOTORES / ENGINES / MOTORI-86)
90º V6 Loopcharge Carb. 200, 225, 250 HP
(1994-01)

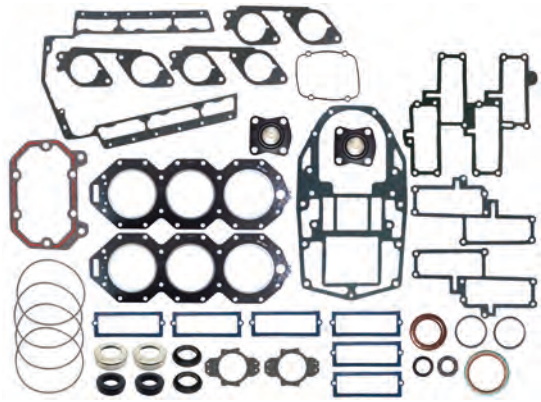

Ref.	R.O. / OEM
REC398693	398693

MOTORES / ENGINES / MOTORI
V8, 2520, 275 HP 300 Special (1994-98)

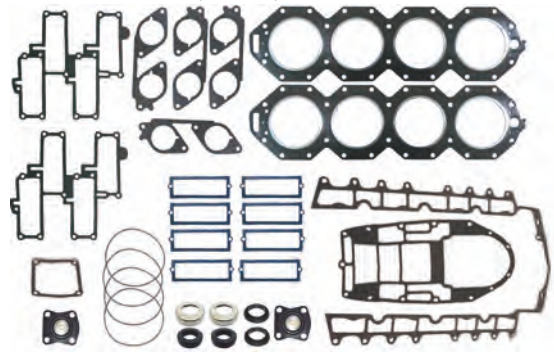

Ref.	R.O. / OEM
REC391988	391988

MOTORES / ENGINES / MOTORI
V8 Crossflow (1978-91)
Excepto / except / eccetto 175-235 HP (1980-89)

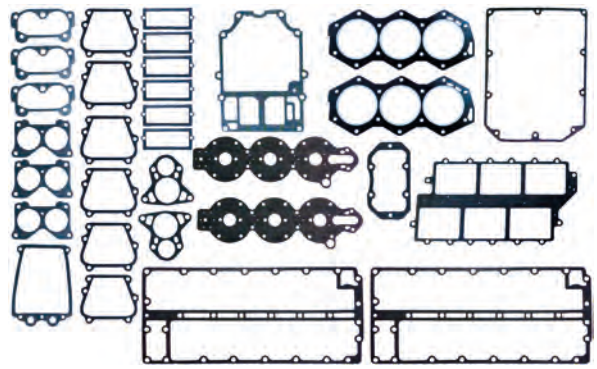

GUÍA KIT JUNTAS MOTOR
POWERHEAD GASKET SET APPLICATIONS
GUIDA KIT GUARNIZIONI MOTORE

HP	Cyl	AÑO YEAR ANNO	REF.
9.9, 15	2	1974-92	REC802113
9.9, 15	2	1993-99	REC436358
20, 25, 28, 30	2	-1979	REC802133
35	2	1979-86	REC802133
40, 45, 48, 55	2	-1980	REC439083
E40	2	2004+	REC5005907
50	2	1971-75	REC439083
55	2	1976	REC439083
55	2	1977-79	REC439083
50	2	1980	REC439083
55, 60	2	1980-85	REC439083
50	3	1995	REC39390
60	3	1986-88	REC439084
60	3	-1989	REC39390
E60	2	2004+	REC5005907
65	3	1972-73	REC439084 + REC878846
65	3	1984-86	REC439084
65	3	-1987	REC39390
70	3	1974-85	REC439084
70	3	-1986	REC39390
75	4	2004+	REC5005931
V 4 Crossflow			
85, 88, 90, 110, 115		-1979	REC439085
E90	4	2004+	REC5005931
100, 115, 140		1978-84	REC439085
115		1985	REC439085
115, 135, 140		1973-77	+ REC318358
E115		2009+	REC5007850
E130		2009+	REC5007850
V4 90° Loopcharged			
120-140		1985-87	REC396750
120-140		1988-94	REC432570
130		1995	REC432570
V4 60° Loopcharged			
90-115 V4 60°		-1995	REC439559
90-115 FFI		-1998	REC5000400
V6 90° Crossflow			
150		1978-91	REC391988
E150		2006+	REC5007129
155		1986-91	REC391988
175		1977-85	REC391988
E175		2006+	REC5007129
185		1984-85	REC391988
200		1976-83	REC391988
E200		2006+	REC5007129
235		1978-79	REC391988
175		1986-91	REC434381
235		1980-85	REC434381
V6 60° Loopcharged			
150-175 V6 60°		-1991	REC437155
V6 90° Loopcharged			
200,225		1985-87	REC398172
200,225		1988-1993	REC436891
200,225		1994-01	REC437725
V8			
250, 275, 300 Special		-1988	REC398693

JUNTAS BLOQUE MOTOR
POWERHEAD MOUNTING GASKET
GUARNIZIONI BLOCCO MOTORE

Ref.	R.O. / OEM
REC324717	324717

MOTORES / ENGINES / MOTORI
9.9 - 15 HP (1972-85)



Ref.	R.O. / OEM
REC325721	325721

MOTORES / ENGINES / MOTORI
9.9 - 15 HP (1986+)

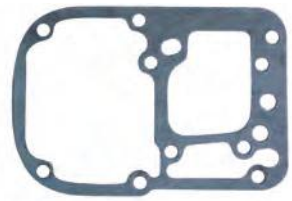

Ref.	R.O. / OEM
REC319348	319348

MOTORES / ENGINES / MOTORI
28, 33, 40 HP



Ref.	R.O. / OEM
REC319710	319710

MOTORES / ENGINES / MOTORI
25, 35 HP (1976-78)

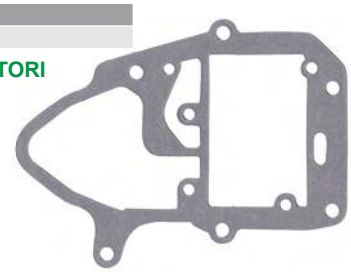

Ref.	R.O. / OEM
REC0330621	330621

MOTORES / ENGINES / MOTORI
25, 35 HP (1979+)

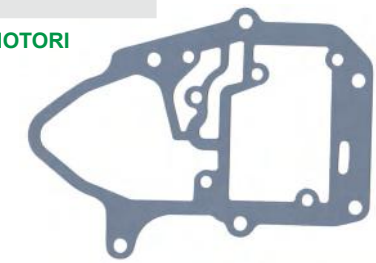

Ref.	R.O. / OEM
REC351018	351018

MOTORES / ENGINES / MOTORI
2 Cyl Loopcharged

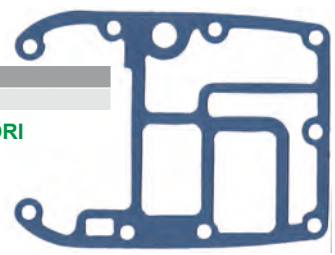

Ref.	R.O. / OEM
REC329828	329828

MOTORES / ENGINES / MOTORI
3 cyl, 60, 70 HP

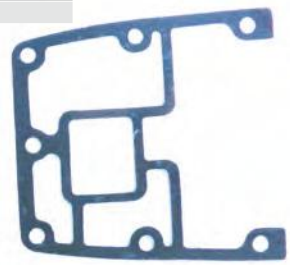

Ref.	R.O. / OEM
REC313763	313763

MOTORES / ENGINES / MOTORI
3 cyl
Junta fina / Thin gasket / guarnizione fina

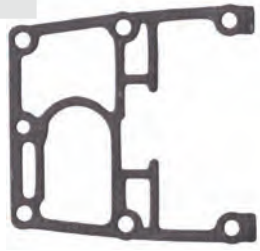

Ref.	R.O. / OEM
REC328618	328618

MOTORES / ENGINES / MOTORI
3 cyl
Junta gruesa / Thick gasket / guarnizione gorda

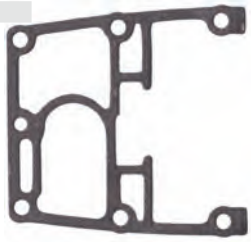

Ref.	R.O. / OEM
REC318373	318373

MOTORES / ENGINES / MOTORI
90° V4 Crossflow (1973-77)

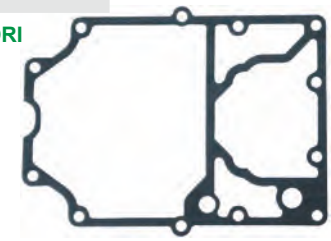

Ref.	R.O. / OEM
REC342513	342513

MOTORES / ENGINES / MOTORI
90° V4 Crossflow (1978-97)

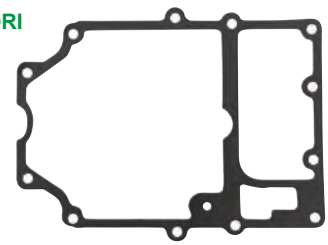

Ref.	R.O. / OEM
REC323214	323214

MOTORES / ENGINES / MOTORI
90° V6 Crossflow

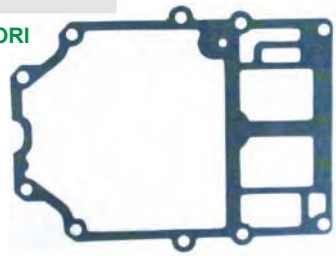

Ref.	R.O. / OEM
REC328590	328590

MOTORES / ENGINES / MOTORI
90° V4 Loopcharged

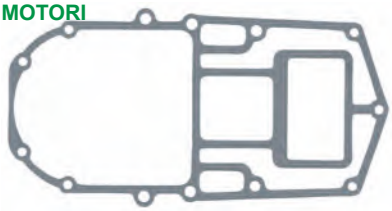

Ref.	R.O. / OEM
REC333879	333879

MOTORES / ENGINES / MOTORI
90° V6 Loopcharged

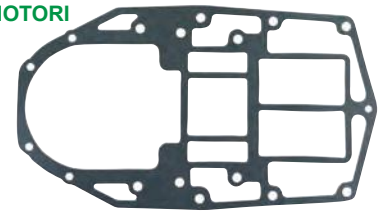

Ref.	R.O. / OEM
REC329975	329975

MOTORES / ENGINES / MOTORI
90° v8 Loopcharged

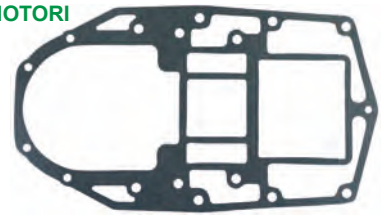

Ref.	R.O. / OEM
REC343853	343853

MOTORES / ENGINES / MOTORI
60° V4 (1997)

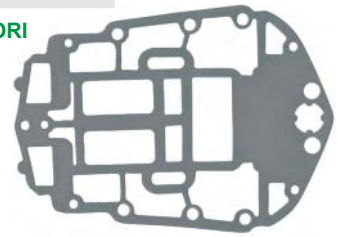

Ref.	R.O. / OEM
REC344386	344386

MOTORES / ENGINES / MOTORI
60° V4 (1988+)

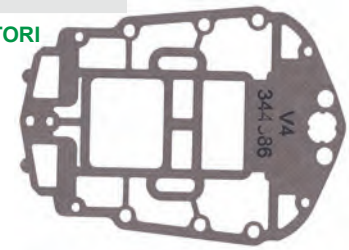

Ref.	R.O. / OEM
REC335419	335419

MOTORES / ENGINES / MOTORI
60° V6



4 TIEMPOS STROKES — JUNTA BASE MOTOR / GASKET CYLINDER / GUARNIZIONI BASE MOTORI

Ref.	R.O. / OEM
REC51142-93J00	5035135

MOTORES / ENGINES / MOTORI
J/BJ200
J/BJ225
(2004-06)



Ref.	R.O. / OEM
REC51211-90J10	5034757

MOTORES / ENGINES / MOTORI
J/BJ90
J/BJ115
J/BJ140
(2004-06)

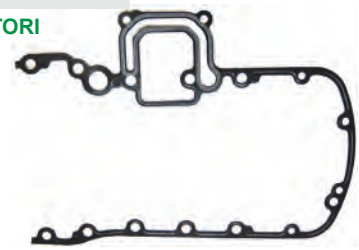

Ref.	R.O. / OEM
REC51211-93J00	5035138

MOTORES / ENGINES / MOTORI
J/BJ200
J/BJ225
(2004-06)

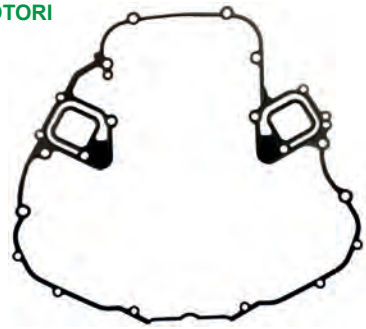

JUNTA CARTER
OIL PAN GASKET
GUARNIZIONI COPPA OLIO

Ref.	R.O. / OEM
REC11489-90J00	5033649

MOTORES / ENGINES / MOTORI
J/BJ90
J/BJ115
J/BJ140
(2003-06)

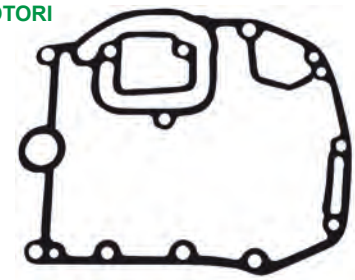

Ref.	R.O. / OEM
REC11489-93E11	5034462

MOTORES / ENGINES / MOTORI
J10
J15
(2004-07)

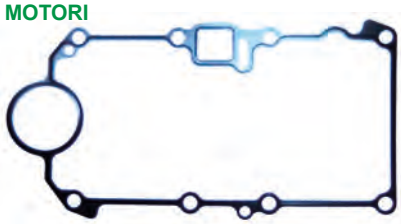

Ref.	R.O. / OEM
REC11489-93J00	5034878

MOTORES / ENGINES / MOTORI
J/BJ200
J/BJ225
(2004-06)

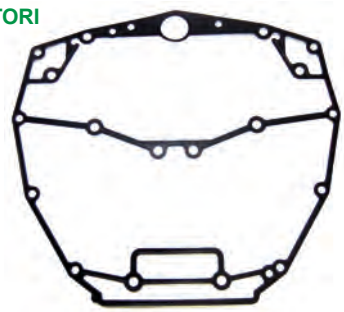

JUNTA CUERPO DE ESCAPE INTERMEDIAS
INTERMEDIATE HOUSING EXHAUST GASKET
GUARNIZIONI SCARICO ED INTERMEDIE

Ref.	R.O. / OEM
REC351019	351019

MOTORES / ENGINES / MOTORI
2 Cyl Loopcharged

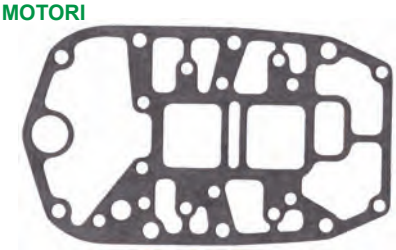

Ref.	R.O. / OEM
REC329826	329826

MOTORES / ENGINES / MOTORI
2 Cyl Loopcharged



Ref.	R.O. / OEM
REC331016	331016

MOTORES / ENGINES / MOTORI
3 Cyl (1972-85)



Ref.	R.O. / OEM
REC336308	336308

MOTORES / ENGINES / MOTORI
3 Cyl, 60, 70, HP (1986+)



RETENES CUERPO DE ESCAPE
SEALS - EXHAUST HOUSING
PARAOLIO SEDE SCARICO

Ref.	R.O. / OEM
REC320936	320936

MOTORES / ENGINES / MOTORI
V4 - V6



Ref.	R.O. / OEM
REC320961	320961

MOTORES / ENGINES / MOTORI
V4 - V6



Ref.	R.O. / OEM
REC324937	324937

MOTORES / ENGINES / MOTORI
40 - 75 HP



JUNTAS ESCAPE
EXHAUST GASKET
GUARNIZIONI SCARICO

Ref.	R.O. / OEM
REC802243	313065

MOTORES / ENGINES / MOTORI
5, 5.5, 6 HP

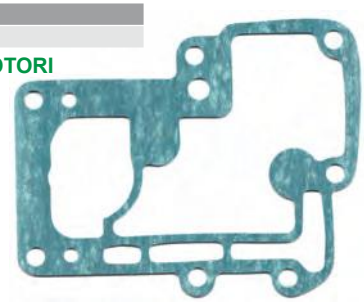

Ref.	R.O. / OEM
REC325211	325211

MOTORES / ENGINES / MOTORI
5, 5.5, 6 HP

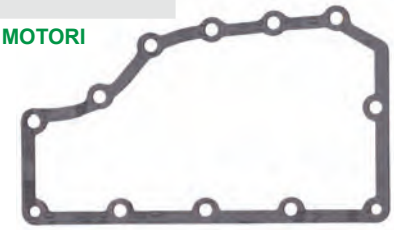

Ref.	R.O. / OEM
REC318925	318925

MOTORES / ENGINES / MOTORI
9.9, 15 HP



Ref.	R.O. / OEM
REC0324323	3234323

MOTORES / ENGINES / MOTORI
25, 35 HP

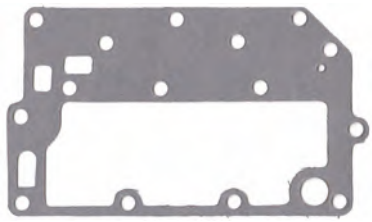

Ref.	R.O. / OEM
REC14212-93J00	5034982

MOTORES / ENGINES / MOTORI
J/BJ200
J/BJ225
(2004-06)



Ref.	R.O. / OEM
REC14152-93J00	5034979 PORT
REC14151-93J00	5034978 STB

MOTORES / ENGINES / MOTORI
J/BJ200
J/BJ225
(2004-06)



REC14151-93J00

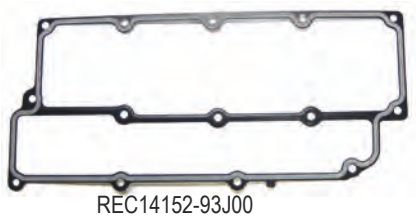

REC14152-93J00

Ref.	R.O. / OEM
REC0326264	326264

MOTORES / ENGINES / MOTORI
2 Cyl Crossflow

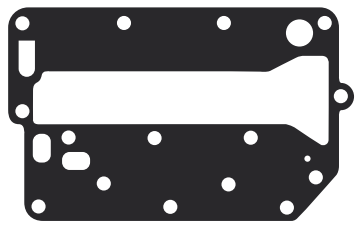

Ref.	R.O. / OEM
REC315868	315868

MOTORES / ENGINES / MOTORI
2 Cyl Loopcharged

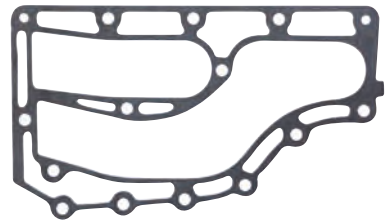

Ref.	R.O. / OEM
REC315869	315869

MOTORES / ENGINES / MOTORI
2 Cyl Loopcharged

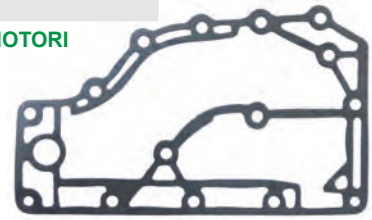

Ref.	R.O. / OEM
REC331916	331916

MOTORES / ENGINES / MOTORI
3 Cyl

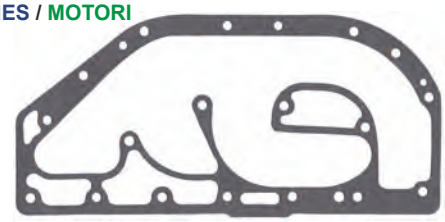

Ref.	R.O. / OEM
REC331917	331917

MOTORES / ENGINES / MOTORI
3 cyl

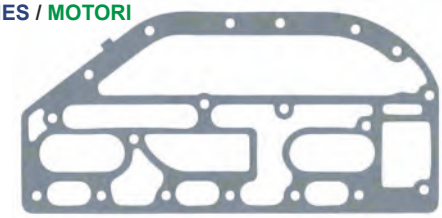

Ref.	R.O. / OEM
REC343863	343863

MOTORES / ENGINES / MOTORI
3 Cyl 60 - 70 HP

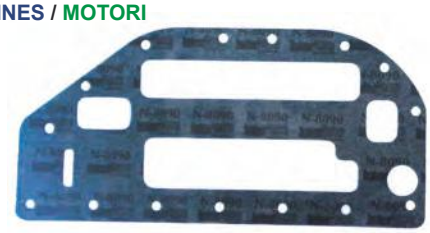

Ref.	R.O. / OEM
REC317955	317955

MOTORES / ENGINES / MOTORI
90º V4 Crossflow

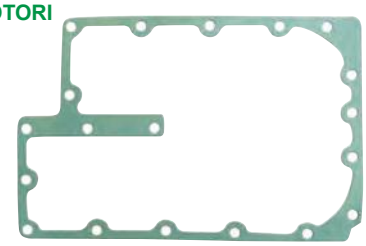

Ref.	R.O. / OEM
REC317914	317914

MOTORES / ENGINES / MOTORI
90º V4 Crossflow

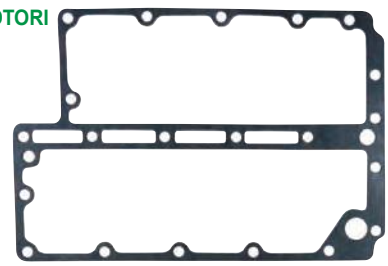

Ref.	R.O. / OEM
REC305176	305176

MOTORES / ENGINES / MOTORI
90° V4 Crossflow

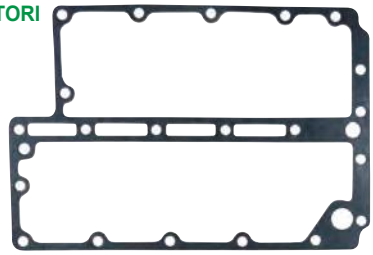

Ref.	R.O. / OEM
REC323469	323469

MOTORES / ENGINES / MOTORI
90° V4 Crossflow

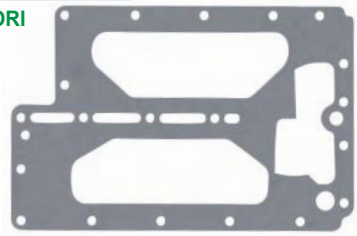

Ref.	R.O. / OEM
REC393561	393561

MOTORES / ENGINES / MOTORI
90° V6 Crossflow, 235 HP

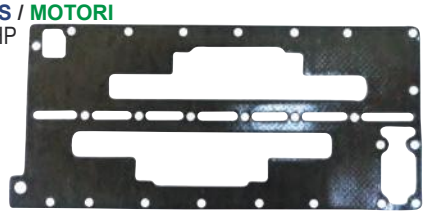

Ref.	R.O. / OEM
REC321182	321182

MOTORES / ENGINES / MOTORI
90° V6 Crossflow

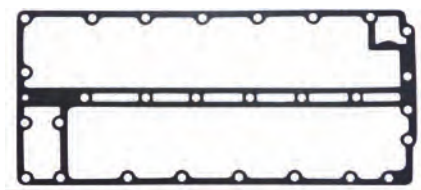

JUNTAS TAPA PASO AGUA BLOQUE
POWERHEAD WATER PASSAGE COVER GASKETS
GUARNIZIONI COPERCHIO PASSAGIGIO ACQUA

Ref.	R.O. / OEM
REC350357	342291

MOTORES / ENGINES / MOTORI
Junta base regulador
Regulation mount gasket
Guarnizione base regolatore
60° V4 / V6



Ref.	R.O. / OEM
REC329920	329920

MOTORES / ENGINES / MOTORI
9.9, 15 HP

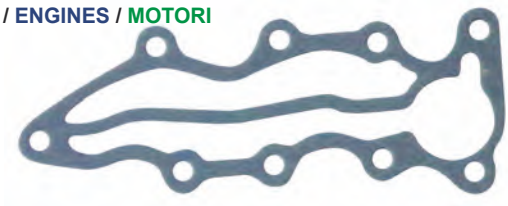

Ref.	R.O. / OEM
REC315538	315538

MOTORES / ENGINES / MOTORI
50, 55 HP

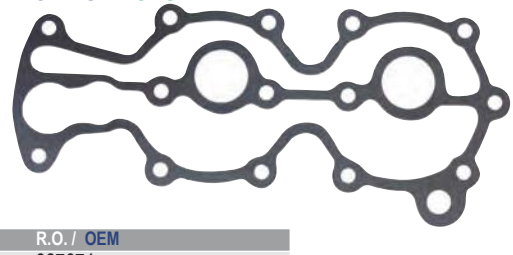

Ref.	R.O. / OEM
REC327674	327674

MOTORES / ENGINES / MOTORI
25, 35 HP



Ref.	R.O. / OEM
REC319665	319665

MOTORES / ENGINES / MOTORI
25, 35 HP



Ref.	R.O. / OEM
REC318335	318335

MOTORES / ENGINES / MOTORI
V4



Ref.	R.O. / OEM
REC766871	318609

MOTORES / ENGINES / MOTORI
3 Cyl



JUNTAS CUERPO PALOMILLA A COLECTOR
THROTTLE BODY TO MANIFOLD GASKETS
CORPO FARFALLA COLLETTORE

Ref.	R.O. / OEM
REC332319	332319

MOTORES / ENGINES / MOTORI
120 - 300 HP (1986+)



JUNTAS TAPA TRANSFERENCIA BABOR MOTORES CROSSFLOW
ENGINES - POWERHEAD TRANSFER PORT GASKET
GUARNIZIONE COPERCHIO SINISTRO

Ref.	R.O. / OEM
REC319332	319332

MOTORES / ENGINES / MOTORI
9.9, 15 HP

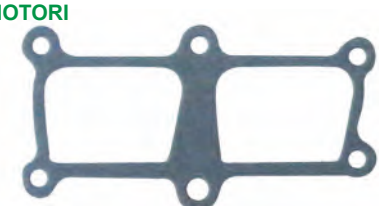

Ref.	R.O. / OEM
REC0319661	319661

MOTORES / ENGINES / MOTORI
25, 35 HP

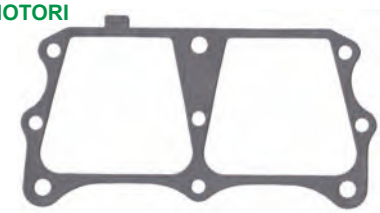

Ref.	R.O. / OEM
REC307133	307133

MOTORES / ENGINES / MOTORI
90º V4

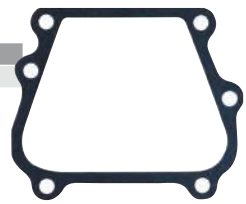

Ref.	R.O. / OEM
REC304784	304784

MOTORES / ENGINES / MOTORI
2 Cyl



JUNTAS DE CARBURADOR A COLECTOR ADMISIÓN
CARBURETOR TO INTAKE MANIFOLD GASKETS
GUARNIZIONE INTERMEDIA CARBURATORE - COLLETTORE ASP

Ref.	R.O. / OEM
REC325092	325092

MOTORES / ENGINES / MOTORI
20 - 75 (1980+)



Ref.	R.O. / OEM
REC318932	318932

MOTORES / ENGINES / MOTORI
6 - 30 (1975+)



Ref.	R.O. / OEM
REC327707	327707

MOTORES / ENGINES / MOTORI
V4 / V6



Ref.	R.O. / OEM
REC326926	326926

MOTORES / ENGINES / MOTORI
3 Cyl

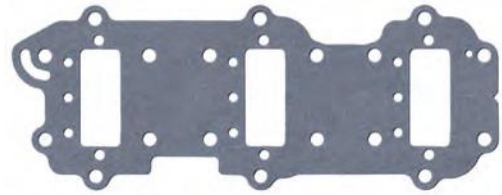

JUNTAS DE ADMISIÓN BABOR A CARBURADOR
PORT INTAKE TO CARBURETOR GASKETS
GUARNIZIONE ASPIRAZIONE SINISTRA - CARBURATORE

Ref.	R.O. / OEM
REC335818	335818

MOTORES / ENGINES / MOTORI
60º V4

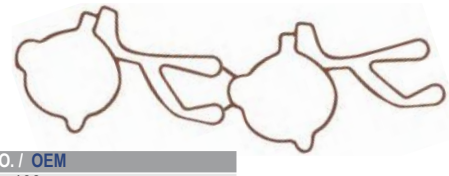

Ref.	R.O. / OEM
REC335403	335403

MOTORES / ENGINES / MOTORI
60º V6

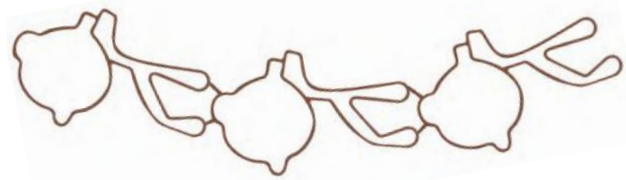

JUNTAS DE ADMISIÓN ESTRIBOR A CARBURADOR
STB INTAKE TO CARBURETOR GASKETS
GUARNIZIONE ASPIRAZIONE DESTRA - CARBURATORE

Ref.	R.O. / OEM
REC335819	335819

MOTORES / ENGINES / MOTORI
60º V4

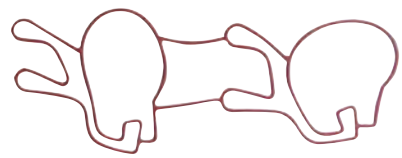

Ref.	R.O. / OEM
REC335404	335404

MOTORES / ENGINES / MOTORI
60º V6

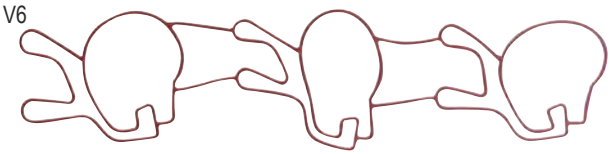

JUNTAS CAJA LENGÜETA
REED BOX GASKETS
GUARNIZIONE PIASTRA

Ref.	R.O. / OEM
REC332266	332266

MOTORES / ENGINES / MOTORI
90º V4, V6 Loopcharged



JUNTAS BASE LENGÜETA
REED PLATE GASKETS
GUARNIZIONE PIASTRA

Ref.	R.O. / OEM
REC318924	318924

MOTORES / ENGINES / MOTORI
9.9, 15 HP



Ref.	R.O. / OEM
REC325260	325260

MOTORES / ENGINES / MOTORI
9.9, 15 HP



Ref.	R.O. / OEM
REC0321479	321479

MOTORES / ENGINES / MOTORI
25, 35 HP

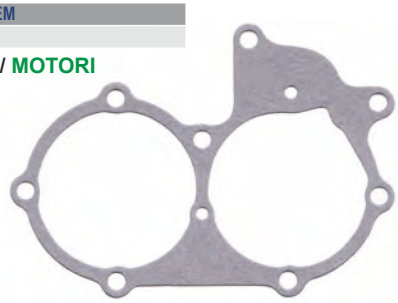

Ref.	R.O. / OEM
REC0326260	326260

MOTORES / ENGINES / MOTORI
25, 35 HP



JUNTAS COLECTOR ADMISIÓN
INTAKE MANIFOLD GASKETS
GUARNIZIONE COLLETTORE ASPIRAZIONE

Ref.	R.O. / OEM
REC315578	315578

MOTORES / ENGINES / MOTORI
2 Cyl Loopcharged

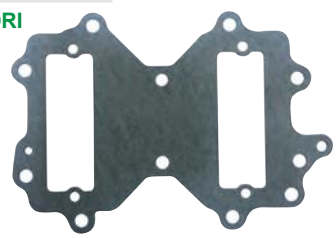

Ref.	R.O. / OEM
REC335633	335633

MOTORES / ENGINES / MOTORI
2 Cyl Loopcharged

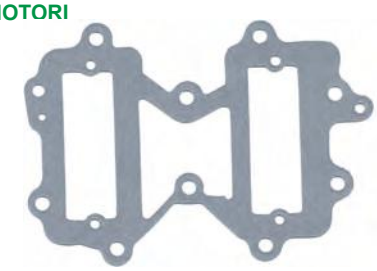

Ref.	R.O. / OEM
REC319174	319174

MOTORES / ENGINES / MOTORI
90º V4



Ref.	R.O. / OEM
REC329718	329718

MOTORES / ENGINES / MOTORI
90º V6 Crossflow



Ref.	R.O. / OEM
REC328622	328622

MOTORES / ENGINES / MOTORI
90º V4 / V6 Loopcharged

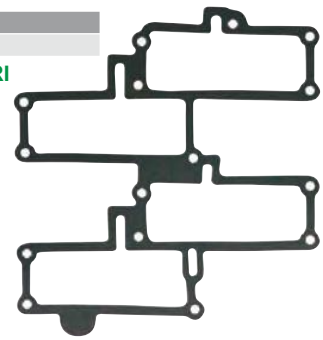

Ref.	R.O. / OEM
REC331532	331532

MOTORES / ENGINES / MOTORI
90º V6 Loopcharged

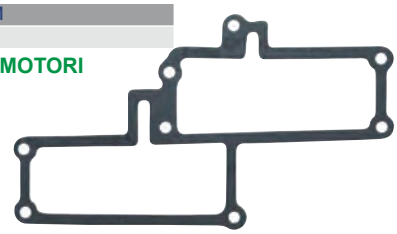

Ref.	R.O. / OEM
REC336388	336388

MOTORES / ENGINES / MOTORI
Babor / Port / Babordo
60º V4

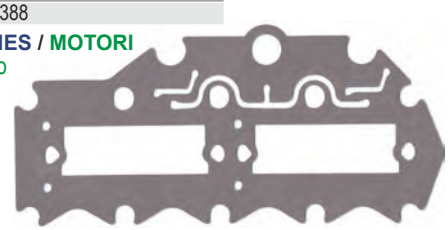

Ref.	R.O. / OEM
REC336289	336389

MOTORES / ENGINES / MOTORI
Estribor / STB / Tribordo
60º V4



Ref.	R.O. / OEM
REC336226	336226

MOTORES / ENGINES / MOTORI
Babor / Port / Babordo
60º V4



Ref.	R.O. / OEM
REC336227	336227

MOTORES / ENGINES / MOTORI
Estribor / STB / Tribordo
60° V6

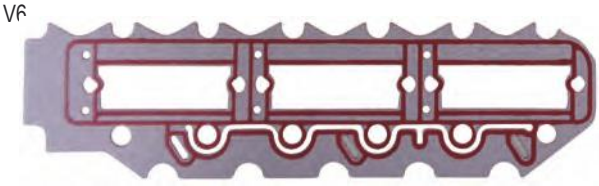

Ref.	R.O. / OEM
REC13119-93J00	5034959

MOTORES / ENGINES / MOTORI
J/BJ 200
J/BJ 225
(2004-06)



Ref.	R.O. / OEM
REC13122-95J00	5036852

MOTORES / ENGINES / MOTORI
J/BJ 25
(2006-07)



JUNTAS, BASE RETÉN
GASKET, MOUNT OIL SEAL COVER
GUARNIZIONE, BASE PARAOLIO

Ref.	R.O.
REC51123-93J00	5035133

MOTORES / ENGINES / MOTORI
J/BJ 200
J/BJ 225 (2004-06)

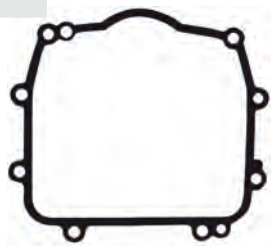

JUNTAS
GASKET OIL GALLERY
GUARNIZIONE OLIO

Ref.	R.O.
REC16433-93J00	5035022

MOTORES / ENGINES / MOTORI
J200 / BJ200
4225 / BJ225 (2004-06)



Ref.	R.O.
REC17693-95J00	5036914

MOTORES / ENGINES / MOTORI
J/BJ 25 (2006-07)



JUNTA, GUÍA CADENA
GASKET TIMING CHAIN GUIDE BASE
GUARNIZIONE CARTER CATENA

Ref.	R.O.
REC12778-93J00	5034916

MOTORES / ENGINES / MOTORI
J/BJ 200
J/BJ 225 (2004-06)

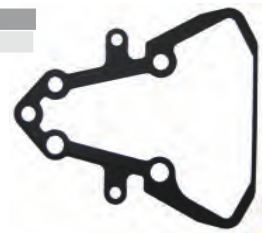

JUNTAS SILENCIADOR
AIR SILENCER GASKET
GUARNIZIONE MARMITTA

Ref.	R.O. / OEM
REC338882	338882

MOTORES / ENGINES / MOTORI
5 - 35 HP



Ref.	R.O. / OEM
REC323338	323338

MOTORES / ENGINES / MOTORI
25, 35 HP



Ref.	R.O. / OEM
REC330689	330698

MOTORES / ENGINES / MOTORI
35 - 55 HP



Ref.	R.O. / OEM
REC330909	330909

MOTORES / ENGINES / MOTORI
35 - 55 HP



Ref.	R.O. / OEM
REC321497	321497

MOTORES / ENGINES / MOTORI
40 - 60 HP



Ref.	R.O. / OEM
REC320679	320679

MOTORES / ENGINES / MOTORI
40 - 60 HP

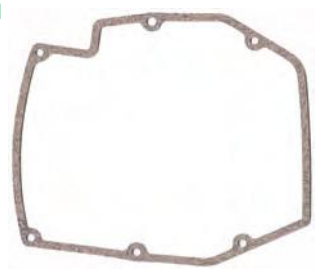

Ref.	R.O. / OEM
REC314115	314115

MOTORES / ENGINES / MOTORI
70, 75 HP



Ref.	R.O. / OEM
REC386573	386573, 319771

MOTORES / ENGINES / MOTORI
85 - 140 HP



Ref.	R.O. / OEM
REC333008	333008

MOTORES / ENGINES / MOTORI
3 Cyl



Ref.	R.O. / OEM
REC321794	3214794

MOTORES / ENGINES / MOTORI
3 cyl

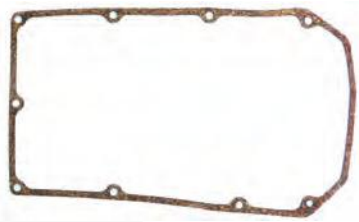

Ref.	R.O. / OEM
REC321722	3214722

MOTORES / ENGINES / MOTORI
V4

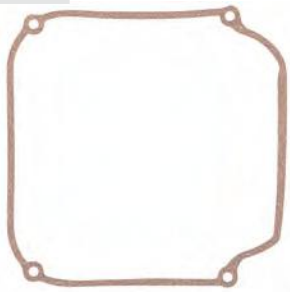

RETENES ACEITE
OIL SEALS
PARAOLIO

Ref.	R.O.
REC09282-10008	5030107

MOTORES / ENGINES / MOTORI
E5 / J5
J4 / J6
(1998-07)



Ref.	R.O.
REC09282-12008	5030108

MOTORES / ENGINES / MOTORI
E5 / J5
J4 / J6
(1998-07)



Ref.	R.O.
REC09282-12010	5033011

MOTORES / ENGINES / MOTORI
J10
J15
(2002-07)



Ref.	R.O.
REC09282-15008	5036938

MOTORES / ENGINES / MOTORI
J/BJ25
(2006-07)



Ref.	R.O.
REC09282-17005	5031264

MOTORES / ENGINES / MOTORI
E40 / J40/ BJ40
E50 / J50 / BJ50
(1999-06)



Ref.	R.O.
REC09283-10003	5030109

MOTORES / ENGINES / MOTORI
E5 / J5
(1998-01)



Ref.	R.O.
REC09283-10009	5033339

MOTORES / ENGINES / MOTORI
J4 / J5 / J6
(2003-07)



Ref.	R.O.
REC09282-17009	5031266

MOTORES / ENGINES / MOTORI
E25/ J 25
E40 / J40
E50 / J50
E30 / J50
(1999-07)



Ref.	R.O.
REC09283-20018	5030110

MOTORES / ENGINES / MOTORI
E5 / J5
(1998-01)



Ref.	R.O.
REC09283-20045	5030111

MOTORES / ENGINES / MOTORI
E5 / J5
(1998-01)



Ref.	R.O.
REC09283-25076	5033481

MOTORES / ENGINES / MOTORI
J4 / J5 / J5
(2003-06)



Ref.	R.O.
REC09289-17006	5033015

MOTORES / ENGINES / MOTORI
J10
J15
(2002-07)



Ref.	R.O.
REC09289-20009	5031893

MOTORES / ENGINES / MOTORI
E25 / J25 / BJ25
E30 / J30 / BJ30
(2000-07)



Ref.	R.O.
REC09289-22007	5031270

MOTORES / ENGINES / MOTORI
E40 / J40 / BJ40
E50 / J50 / BJ50
(1999-06)



CARBURADOR
CARTURATOR
CARBURATORE

KITS CARBURADOR
CARBURETOR KIT
GUIDA CARBURATORI

Ref.	R.O.
REC438996	435442, 438996



Ref.	R.O.
REC439078	435752, 439078, 435678, 43577, 435676



Ref.	R.O.
REC13910-89J01	5032424

MOTORES / ENGINES / MOTORI
E25 / J25
E30 / J30
(2000-06)



Ref.	R.O.
REC439071	439071, 398532, 383067, 383052, 382049



Ref.	R.O.
REC439072	439072, 398452, 391305, 398453



Ref.	R.O.
REC18-7761	

MOTORES / ENGINES / MOTORI
4, 8 HP (2007)
4 Tiempos / 4 Strokes / 4 Tempi



Ref.	R.O.
REC396701	396701, 398729, 392061



Ref.	R.O.
REC439076	439076, 434888, 435443, 398526, 392550



Ref.	R.O.
REC439074	4359073



Ref.	R.O.
REC439075	439074, 439075



BOYA
FLOAT
GALLEGGIANTE

Ref.	R.O.
REC382363	382363



KITS AGUJA CARBURADOR
NEEDLE VALVE SET
KIT SPILLO CONICO CARBURATORE

Ref.	R.O.
REC387262	379312, 387262



Ref.	R.O.
REC396521	378895, 396521, 678882

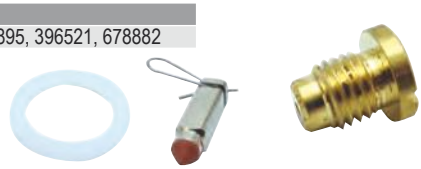

Ref.	R.O.
REC396522	379312, 396522



Ref.	R.O.
REC396520	396520

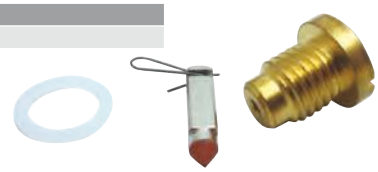

GUÍA KITS CARBURADOR
CARBURATOR SET GUIDE
GUIDA KITS CARBURATORE

HP	AÑO YEAR ANNO	KITS SIN BOYA KIT WITHOUT FLOAT KIT SENZA GALLEGGIANTE	KIT AGUJAS NEEDLE KIT KIT AGHI
2	1970-90	REC439071	REC396522
3	1952-67	REC439071	REC396521
3	1968	REC439071	REC396522
4	1965-78	REC439071	REC396522
4	1983-89	REC439072	REC396522
4	1991-93	REC439072	REC396522
4 4T.	2007+	REC18-7761	
4.5	1982-84,87	REC439072	REC396522
5	1965-67	REC439071	REC396522
5	1968	REC439075	REC396521
5	1984-85	REC439072	REC396522
5.5	1954-67	REC439071	REC396522
6	1954-79	REC439071	REC396522
6	1968	REC439075	REC396521
6	1984-85	REC439072	REC396522
6	1986+	REC439074	
7.5	1955-58	REC439071	REC396522
7.5	1982-83	REC439072	REC396522
8	1984-85	REC439072	REC396522
8	1986+	REC439074	
8 4T.	2007+	REC18-7761	
9.9	1974-88	REC439072	REC396522
9.9	1989+	REC439074	REC396522
14	1968	REC439072	REC396522
15	1989+	REC439074	REC396522
15	1974-88	REC439072	REC396522
18	1957-68	REC439071	REC396522
20	1969-73	REC396701	REC396521
20	1957-68	REC439071	REC396522
20	1969-90	REC396701	REC396521
20	1991-97	REC439074	
25	1991-95	REC439078	REC396522
SAIL	1954-55	REC439075	REC396521
DR	1978-90	REC396701	REC396521
25	1969-95	REC396701	REC396521
25	1991-95	REC439078	REC396522
25 4T.	2004+	REC13910-89J01	
28	1962-64	REC439075	REC396521
28	1976-95	REC396701	REC396521
28	1992-93	REC439078	REC396522
30	1956		REC396521
30	1976-95	REC396701	REC396521
30	1991-93	REC439078	REC396522
30 4T.	2004+	REC13910-89J01	
33	1965-70	REC439075	REC396521
35	1957-59	REC439075	REC396521
35	1959	REC439075	REC396521
35	1976-95	REC396701	REC396521
35	1991-3	REC439078	REC396522
40	1960-63, 71	REC439075	REC396521
40	1965-70, 72-78	REC439075	REC396521
40	1971-90, 79-92	REC396701	REC396521
40	1993	REC439078	REC396522
45	1971-95	REC396701	REC396521
45	1992	REC439078	REC396522

HP	AÑO YEAR ANNO	KITS SIN BOYA KIT WITHOUT FLOAT KIT SENZA GALLEGGIANTE	KIT AGUJAS NEEDLE KIT KIT AGHI
48	1992-95	REC439078	REC396522
50	1958-59	REC396701	REC396521
50	1993	REC439078	REC396522
55	1968-69, 71-95	REC396701	REC396521
55	1992	REC439078	REC396522
60	1964-67	REC439078	REC396521
60	1970-95	REC396701	REC396521
60	1992-93	REC439078	REC396522
65	1972-95	REC396701	REC396521
65	1992-93	REC439078	REC396522
70 (3 Cyl.)	1972-95	REC396701	REC396521
70	1992-93	REC439078	REC396522
75	1975-88	REC396701	REC396521
85	1971-79	REC439075	REC396521
85	1969-70, 91-93	REC439076	REC387262
V-4	1969-79	REC439076	REC387262
V-4	1983-84	REC439076	REC387262
88, 90	1985-95	REC439076	REC387262
90	1981-82, 83	REC439076	REC387262
100	19,711, 980	REC439076	REC387262
100	19,721, 979		REC396521
100	1985-95	REC439076	REC387262
110	1985-90	REC439076	REC387262
115	1969, 80-95	REC439076	REC387262
115	1970, 73-79		REC396521
V-6	1976-90	REC439076	REC387262
115	1983	REC439076	REC387262
120	1985-87	REC439078	REC396522
120	1988-94, 1986	REC439078	REC396522
125	1971-72		REC396521
125	1993-94	REC439078	REC396522
125C	1989-95	REC439078	REC396522
135	1973-76		REC396521
140	1977, 80-83	REC439076	REC387262
140	1978-79		REC396521
140	1986-90	REC439078	REC396522
140	1993-94	REC439078	REC396522
150	1979-90	REC439076	REC387262
150 C	1993	REC438996	REC396522
150	1992-93	REC438996	REC396522
155	1984-93	REC439076	REC387262
175	1977-91	REC439076	REC387262
175	1992-93	REC438996	REC396522
185	1984	REC439076	REC387262
185	1989-93	REC438996	REC396522
200	1976-83	REC439076	REC387262
200	1987-90	REC439078	REC396522
200	1992-93	REC438996	REC396522
225	1986-92	REC438996	REC396522
225	1992-93	REC438996	REC396522
235	1978-84	REC439076	REC387262
250	1991-93	REC438996	REC396522
275 / 3.6L	1985-88	REC438996	REC396522
300	1988	REC438996	REC396522
300	1991-93	REC438996	REC396522

RETENEDOR
RETAINER
FERMO

Ref.	R.O.
REC315232	315232

MOTORES / ENGINES / MOTORI
5 - 75 HP



KIT VÁLVULA
VALVE KIT
KIT VALVOLA

Ref.	R.O.
REC18-7044	

MOTORES / ENGINES / MOTORI
9.9, 15 HP



BOMBA COMBUSTIBLE
FUEL PUMP
POMPA BENZINA

Ref.	R.O.
REC1399-07350	397839

MOTORES / ENGINES / MOTORI
6, 8, 9.9, 15 HP



Ref.	R.O.
REC1399-07353	438555

MOTORES / ENGINES / MOTORI
20 - 30 HP (1990-00)



Ref.	R.O.
REC1399-07352	438556

MOTORES / ENGINES / MOTORI
25 - 50 HP (1976-99)
Sin V.R.O / Without VRO / Senza VRO



Ref.	R.O.
REC1399-07351	438562

MOTORES / ENGINES / MOTORI
9.9, 15 HP (1993-02)



Ref.	R.O.
REC438559	0438559, 0765591

MOTORES / ENGINES / MOTORI
EVINRUDE: BE25, BE35, E25, E35, SE105, SE125
JOHNSON: BJ25, J25, J115, SJ125
(1997-05)



BOMBA COMBUSTIBLE ALTA PRESIÓN
FUEL PUMP HIGH PRESSURE
POMPA BENZINA ALTA PRESSIONE

Ref.	R.O.
REC63P-13907-03	5032617, 5033702, 5036635, 5030700

MOTORES / ENGINES / MOTORI
E40 / J40 / BJ40
E50 / J50 / BJ50
E70 / J70 / BJ70
J60 / BJ60
(2001-06)



JUNTAS VST
VST GASKETS
GUARNIZIONE VST

Ref.	R.O.
REC15626-99E00	5031114

MOTORES / ENGINES / MOTORI
E/J/BJ 40 - 70 HP (1998-06)

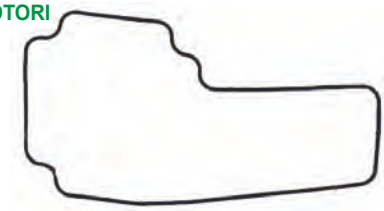

Ref.	R.O.
REC15626-90J00	5033706

MOTORES / ENGINES / MOTORI
BJ90
BJ/J115
BJ/J140



FILTROS
FILTERS
FILTRI

Ref.	R.O.
REC308239	308239



Ref.	R.O.
REC305185	305185

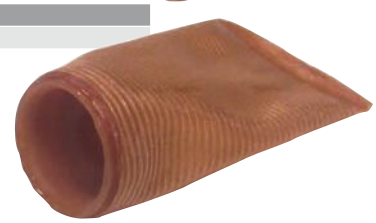

KIT BOMBA COMBUSTIBLE
SET, FUEL PUMP
KIT POMPA BENZINA

Ref.	R.O.
REC398514	398514



Ref.	R.O.
REC393088	393088

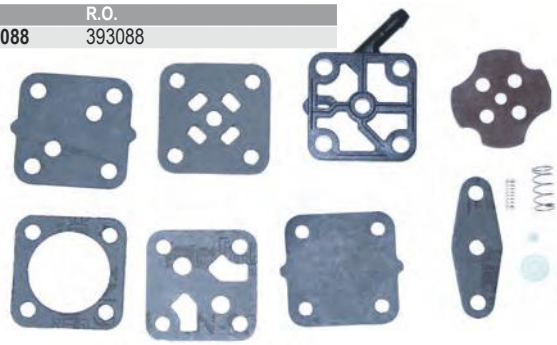

Ref.	R.O.
REC438616	438616

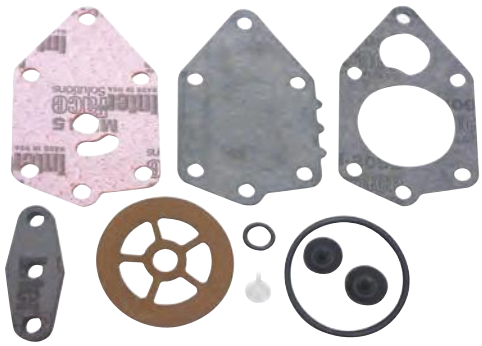

Ref.	R.O.
REC393103	393103



Ref.	R.O.
REC432962	432962



JUNTAS BOMBA COMBUSTIBLE
FUEL PUMP GASKETS
GUARNIZIONI POMPA BENZINA

Ref.	R.O.
REC338876	338876



Ref.	R.O.
REC303615	303615



Ref.	R.O.
REC338879	338879



VÁLVULA
CHECK VALVE
VALVOLA

Ref.	R.O.
REC335334	335334



KIT MEMBRANAS
DIAPHRAGM SET
KIT MEMBRANA

Ref.	R.O.
REC15170-91J00	5033372

MOTORES / ENGINES / MOTORI
(4 Tiempos / 4 Strokes / 4 Tempi)
4 - 5 HP (2003-06)
6 HP (2005-06)



Ref.	R.O.
REC15170-94J00	5037584

MOTORES / ENGINES / MOTORI
9.9 - 15 HP (2005-07)
4 Tiempos / 4 Strokes / 4 Tempi



Ref.	R.O.
REC15170-99E00	5030699

MOTORES / ENGINES / MOTORI
(4 Tiempos / 4 Strokes / 4 Tempi)
9.9, 15 HP (2002-04)
25 HP (2004-06)
30 HP (2004-07)
40 - 70 HP (2002-06)



Ref.	R.O.
REC15170-98110	5030181

MOTORES / ENGINES / MOTORI
E5 / J5 (1998-01)



GUÍA KIT MEMBRANAS
DIAPHRAGM SET APPLICATION
GUIDA KIT MEMBRANA

HP	AÑO YEAR ANNO	REF
2,5	1987-88	REC393088
4	1982-95	REC393088
4 / 5 / 6 (4Tiempos / 4 Strokes / 4 Tempi)	2003-07	REC15170-91J00
4.0 Deluxe	1992-93	REC393088
4.5	1982-87	REC393088
5	1985-93	REC393088
5 (4Tiempos / 4 Strokes / 4 Tempi)	1998-01	REC15170-98110
6	1986-93	REC393088
6.5	1989-90	REC393088
7.5	1982-83	REC393088
8	1984-93	REC393088
9.9/15	1981	REC393103
9.9/15	1982-92	REC393088
9.9/15 elec.	1990+	REC438616
9.9/15 (4Tiempos / 4 Strokes / 4 Tempi)	2005-07	REC15170-94J00
10/14	1989-90	REC393088
J10 - J70	1998-07	REC15170-99E00
14	1988	REC393088
20/25	1982-84	REC393103
20/25/30	1987	REC398514
20/25	1988-89	REC432962
20/25/30 Ro	1990	REC432962
20/30	1990+	REC438616
20/30/35 Re	1990	REC432962
20/35 Rope	1989-90	REC432962
25 Com	1982	REC393103
25 Com	1988-90	REC432962
E25 / E30 / E40 / E50 / E70	1998-07	REC15170-99E00
28	1987	REC398514
30	1984	REC393103
40	1987	REC398514
40	1990+	REC438616
40/50	1988	REC432962
BJ40 - BJ70	1998-07	REC15170-99E00
45/55	1985-86	REC398514
45/55	1987	REC398514
45/55 Com	1989-90	REC398514
45/48/50	1989+	REC438616
48	1987	REC398514
48	1988-90	REC432962
48	1987	REC398514
48	1988	REC432962
48/50	1990	REC432962
50/60	1982-84	REC393103
55	1983	REC393103
55 Com	1984	REC393103
60	1988	REC398514
65	1985-87	REC393103
65	1990	REC398514
65 Com	1984	REC393103
65 Com	1988-89	REC398514
70/75	1982-84	REC393103
70	1990	REC398514
80	1978-83	REC393103
88	1987	REC398514
88/90/110	1988-89	REC398514
88/90/100/115	1990	REC398514
90/115	1983	REC393103
90/115/140	1982	REC393103
100 Com	1989-90	REC398514
115 Com	1989-90	REC398514
V4 140	1983	REC393103
150/175/200	1982	REC393103
V6 150/175	1983	REC393103
155 Com	1989-90	REC398514
V6 235	1983	REC393103
2.6	1984	REC398514
3.0	1991-93	REC393088

TERMOSTATO
THERMOSTAT
TERMOSTATO

DESPIECES TERMOSTATOS
THERMOSTATS ASSEMBLIES
ESPLOSO TERMOSTATI

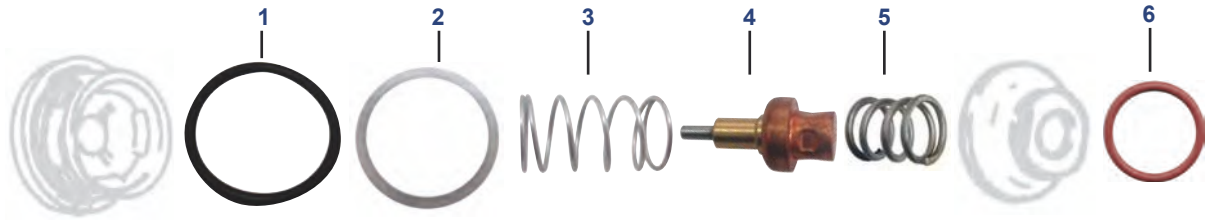

2 CYL 25/35 HP (1996-01)

Nº	Ref.	R.O./OEM	Descripción	Description	Descrizione
1		308458	ARO	O-RING	O-RING
2	REC336185	336185	ARANDELA	WASHER	RONDELLA
3		336211	MUELLE	SPRING	MOLLA
4	REC878904	436195	TERMOSTATO	THERMOSTAT	TERMOSTATO
5		336179	MUELLE	SPRING	MOLLA
6	REC301967	301967	ARO	O-RING	O-RING

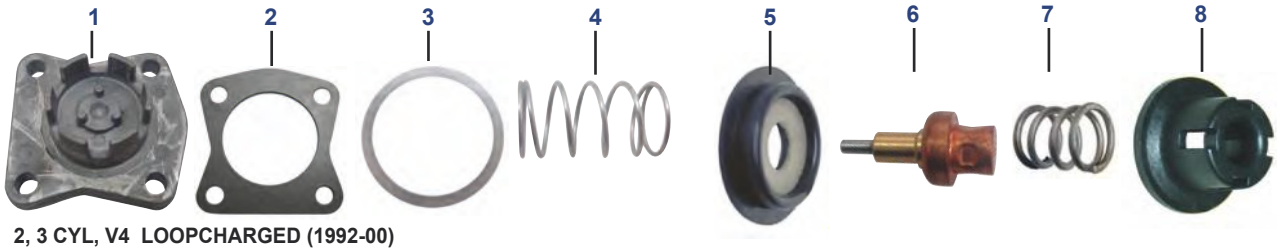

2, 3 CYL, V4 LOOPCHARGED (1992-00)

Nº	Ref.	R.O./OEM	Descripción	Description	Descrizione
1	**REC343141**	343141	TAPA	COVER	COPERCHIO
2	**REC329830**	329830	JUNTA	GASKET	GUARNIZIONE
3	**REC336185**	336185	ARANDELA	WASHER	RONDELLA
4		336211	MUELLE 60-70 HP (1993) y V4 Con tapa de termostato 339207	SPRING60-70 HP (1993) & V4 Use with thermostat cover 339207	MOLLA 60-70 HP (1993) E V4 Usare con coperchio termostato 339207
4		342421	MUELLE 40-70 HP (1995-96) y V4	SPRING 40-70 HP (1995-96) & V4	MOLLA 40-70 HP (1995-96) e V4
4		343115	MUELLE 40-70 HP (1997-98)	SPRING 40-70 HP (1997-98)	MOLLA 40-70 HP (1997-98)
4		343020	MUELLE V4	SPRING V4	MOLLA V4
5	**REC435957**	435957	DIAFRAGMA	DIAPHRAGM	MEMBRANA
6	**REC878904**	436195	TERMOSTATO	THERMOSTAT	TERMOSTATO
7		336179	MUELLE	SPRING	MOLLA
8	**REC336178**	336178	CAMISA TERMOSTATO	THERMOSTAT SLEEVE	SEDE TERMOSTATO

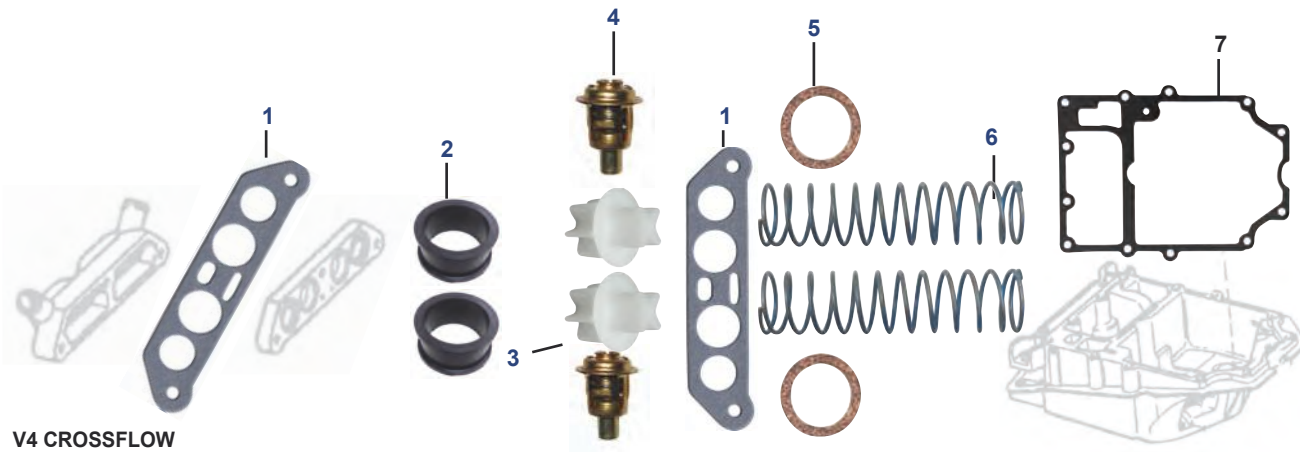

V4 CROSSFLOW

Nº	Ref.	R.O./OEM	Descripción	Description	Descrizione
1	**REC332369**	332369	JUNTA	GASKET	GUARNIZIONE
2	**REC321692**	321692	GRUESO	GROMMET	SPESSORE
3	**REC318395**	318395	VÁLVULA	VALVE	VALVOLA
4	**REC6F5-12411-03**	5005440	TERMOSTATO	THERMOSTAT	TERMOSTATO
5	**REC321932**	321932	JUNTA	GASKET	GUARNIZIONE
6	**REC317245**	317245	MUELLE	SPRING	MOLLA
7	**REC318373**	318373	JUNTA (1973-77)	GASKET (1973-77)	GUARNIZIONE (1973-77)
7	**REC342513**	342513	JUNTA (1978-97)	GASKET (1978-97)	GUARNIZIONE (1978-97)

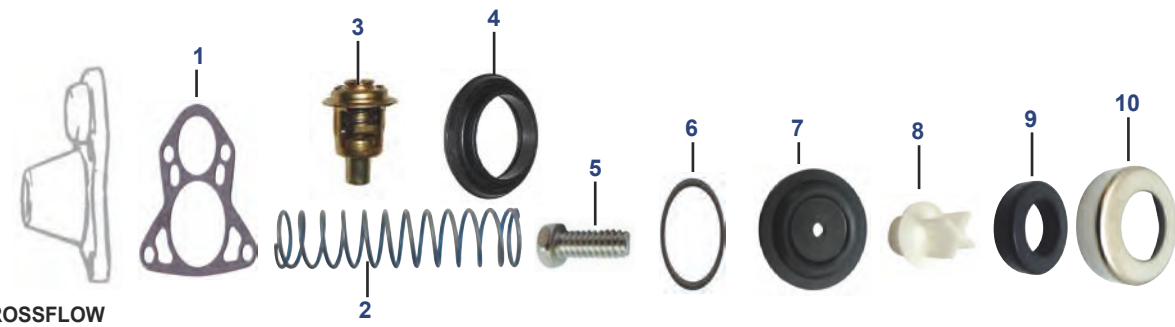

V6 CROSSFLOW

Nº	Ref.	R.O./OEM	Descripción	Description	Descrizione
1	**REC321184**	321184	JUNTA	GASKET	GUARNIZIONE
2	**REC317245**	317245	MUELLE	SPRING	MOLLA
3	**REC6F5-12411-03**	5005440	TERMOSTATO	THERMOSTAT	TERMOSTATO
4	**REC27-62386001**	310058	JUNTA	GASKET	GUARNIZIONE
5	**REC306643**	306643	TORNILLO	SCREW	VITE
6	**REC321120**	321120	TAPA CIERRE	PLATE SEAL	COPERCHIO
7	**REC321221**	321221	DIAFRAGMA	DIAPHRAGM	MEMBARNA
8	**REC321027**	321027	VÁLVULA	VALVE	VALVOLA
9	**REC320880**	320880	ASIENTO VÁLVULA	VALVE SEAT	SEDE VALVOLA
10	**REC321222**	321222	TAPA VÁLVULA	VALVE CUP	COPERCHIO VALVOLA

KITS TERMOSTATO
THERMOSTAT KITS
KITS TERMOSTATO

Ref. REC13450 — R.O.

MOTORES / ENGINES / MOTORI
3 Cyl



REF	R.O./OEM	Descripción	Description	Descrizione
REC396987		TERMOSTATO	THERMOSTAT	TERMOSTATO
REC332108	332108	JUNTA	GASKET	GUARNIZIONE
REC3852120		JUNTA	GASKET	GUARNIZIONE

Ref. REC13350 — R.O.

MOTORES / ENGINES / MOTORI
6-55 HP, 90° V4, 90° V6



REF	R.O./OEM	Descripción	Description	Descrizione
REC6F5-12411-03		TERMOSTATO	THERMOSTAT	TERMOSTATO
REC27-62386001		JUNTA	GASKET	GUARNIZIONE

Ref. REC13270 — R.O.

MOTORES / ENGINES / MOTORI
143° V4 Crossflow



Ref.	R.O. OEM	Descripción	Description	Descrizione
REC6F5-12411-03	434841	TERMOSTATO	THERMOSTAT	TERMOSTATO
REC318395	318395	TERMOSTATO	THERMOSTAT	TERMOSTATO
REC317245	317245	VÁLVULA	VALVE	VALVOLA
REC321692	321692	MUELLE	SPRING	MOLLA
REC332369	332369	GRUESO	GROMMET	SPESORE
REC321932	321932	JUNTA	GASKET	GUARNIZIONE
REC332369	332369	JUNTA	GASKET	GUARNIZIONE

Ref. REC435597 — R.O.



Ref.	R.O. OEM	Descripción	Description	Descrizione
REC338632	338632	TAPA	COVER	COPERCHIO
REC331188	331188	ARO	O-RING	O-RING
	337067	MUELLE	SPRING	MOLLA
REC435491	435491	TERMOSTATO	THERMOSTAT	TERMOSTATO

Ref. REC13290 — R.O.

MOTORES / ENGINES / MOTORI
143°, 60° V4-V6



Ref.	R.O./OEM	Descripción	Description	Descrizione
REC338632	338632	TAPA	COVER	COPERCHIO
REC331188	331188	ARO	O-RING	O-RING
	337067	MUELLE	SPRING	MOLLA
REC435491	435491	TERMOSTATO	THERMOSTAT	TERMOSTATO
REC343105	343105	CAMISA	SLEEVE	CAMICIA

Ref. REC13310 — R.O.



Ref.	R.O./OEM	Descripción	Description	Descrizione
REC332944	332944	TAPA	COVER	COPERCHIO
REC331188	331188	ARO	O-RING	O-RING
	337067	MUELLE	SPRING	MOLLA
REC437090	437090	TERMOSTATO	THERMOSTAT	TERMOSTATO
REC339044	339044	JUNTA	GASKET	GUARNIZIONE

Ref. REC13280 — R.O.

MOTORES / ENGINES / MOTORI
143° V6 Crossflow



Ref.	R.O. OEM	Descripción	Description	Descrizione
REC6F5-12411-03	434841	TERMOSTATO	THERMOSTAT	TERMOSTATO
REC27-62386001	310058	RETÉN	SEAL	PARAOLIO
REC321184	321184	JUNTA	GASKET	GUARNIZIONE
REC317245	317245	MUELLE	SPRING	MOLLA
REC320880	320880	ASIENTO VÁLVULA	VALVE SEAT	SEDE VALVOLA
REC321222	321222	TAPA VÁLVULA	VALVE CUP	COPERCHIO VALVOLA
REC321221	321221	DIAFRAGMA VÁLVULA	VALVE DIAPHRAGM	MEMBRANA VALVOLA
REC321220	321220	MUELLE RETENEDOR	SPRING RETAINER	MOLLA DI CONTENIMENTO
REC321027	321027	VÁLVULA	VALVE	VALVOLA

Ref. REC13260 — R.O.

MOTORES / ENGINES / MOTORI
133° V6 Offshore



Ref.	R.O./OEM	Descripción	Description	Descrizione
REC332944	332944	TAPA	COVER	COPERCHIO
REC331188	331188	ARO	O-RING	O-RING
	337067	MUELLE	SPRING	MOLLA
REC437090	437090	TERMOSTATO	THERMOSTAT	TERMOSTATO
REC339044	339044	JUNTA	GASKET	GUARNIZIONE
REC343105	3343105	CAMISA	SLEEVE	CAMICIA

TERMOSTATO
THERMOSTAT
TERMOSTATO

Ref.	R.O.
REC396987	396987

MOTORES / ENGINES / MOTORI
143º, 3 Cyl (-1985)



Ref.	R.O.
REC6F5-12411-03	434841, 5005440

MOTORES / ENGINES / MOTORI
143º, 6-55 HP, V4, V6 Crossflow



Ref.	R.O.
REC435491	435491

MOTORES / ENGINES / MOTORI
143º, 60º V4, 90-115 HP (1995+)
60º V6, 150-175 HP (1991+)



Ref.	R.O.
REC434137	434137

MOTORES / ENGINES / MOTORI
143º, 3 Cyl, (1986-91)
V4 Loopcharged, V8



Ref.	R.O.
REC878904	436195

MOTORES / ENGINES / MOTORI
143º, 9.9, 15, 40, 48, 50 HP 3 Cyl, V4



Ref.	R.O.
REC394411	394411

MOTORES / ENGINES / MOTORI
143º, Vernatherm, 65, 85, 100, 115, 135 HP
(1971-90)



Ref.	R.O.
REC437090	437090

MOTORES / ENGINES / MOTORI
133º, 90º V6 OFFSHORE
Acero Inox. Flujo bajo.
Stainles Steel. Lower flow.
Acciao inox. Flusso basso.



Ref.	R.O.
REC5001036	5001036

MOTORES / ENGINES / MOTORI
133º, 90º V6 200-250 Ficht
Flujo alto / Higher flow / Flusso alto.



JUNTAS TERMOSTATO
THERMOSTAT GASKET
GUARNIZIONI TERMOSTATO

Ref.	R.O.
REC323582	323582

MOTORES / ENGINES / MOTORI
2 cyl. Crossflow, 9.9 - 25 HP
Goma / rubber / gomma



Ref.	R.O.
REC27-62386001	310058

MOTORES / ENGINES / MOTORI
2 Cyl, Crossflow
90º V6 Crossflow
Goma / rubber / gomma



Ref.	R.O.
REC0329319	329319

MOTORES / ENGINES / MOTORI
2 Cyl, Crossflow
8 - 30 HP
Goma / rubber / gomma



Ref.	R.O.
REC332130	332130

MOTORES / ENGINES / MOTORI
3 Cyl
Goma / rubber / gomma



Ref.	R.O.
REC339044	339044

MOTORES / ENGINES / MOTORI
60º V4, V6
Goma / Rubber / Gomma



Ref.	R.O.
REC3852120	313416

MOTORES / ENGINES / MOTORI
3 Cyl
Corcho / Cork / Guarnizioni in sughero



Ref.	R.O.
REC321932	321932

MOTORES / ENGINES / MOTORI
90º V4 Crossflow
Corcho / Cork / Guarnizioni in sughero



Ref.	R.O.
REC335981	335981

Asiento / Pop off seat / Sede



TAPA TERMOSTATO
THERMOSTAT COVERS
COPERCHIO TERMOSTATO

Ref.	R.O.
REC343141	343141

MOTORES / ENGINES / MOTORI
50 - 70 HP (1986+)



Ref.	R.O.
REC332944	332944

MOTORES / ENGINES / MOTORI
2 Cyl, Loopcharged (1997)
V6 Offshore



Ref.	R.O.
REC338632	338632

MOTORES / ENGINES / MOTORI
60° V4, V6



Ref.	R.O.
REC344771	344771, 0344771

MOTORES / ENGINES / MOTORI
EFI & E-TECH
200 - 300 HP (1999+)



JUNTAS TAPA
COVER GASKET
GUARNIZIONI COPPERCHIO

Ref.	R.O.
REC329076	329076

MOTORES / ENGINES / MOTORI
6 - 8 HP



Ref.	R.O.
REC336947	336947

MOTORES / ENGINES / MOTORI
5, 6, 8, 10, 15 HP (1991-01)



Ref.	R.O.
REC308328	308328

MOTORES / ENGINES / MOTORI
2 Cyl Crossflow



Ref.	R.O.
REC311145	311145

MOTORES / ENGINES / MOTORI
2 Cyl Crossflow



Ref.	R.O.
REC318917	318917

MOTORES / ENGINES / MOTORI
2 Cyl Crossflow



Ref.	R.O.
REC329830	329830

MOTORES / ENGINES / MOTORI
2, 3 Cyl Loopcharged
90° V4 Loopcharged



Ref.	R.O.
REC332108	332108

MOTORES / ENGINES / MOTORI
3 Cyl 49 C.I. (1985-88)

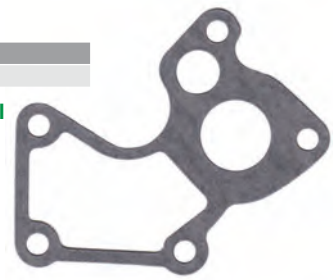

Ref.	R.O.
REC305586	305586

MOTORES / ENGINES / MOTORI
90° V4 Crossflow

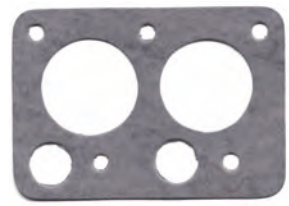

Ref.	R.O.
REC332369	332369

MOTORES / ENGINES / MOTORI
90° V4 Crossflow



Ref.	R.O.
REC321184	321184

MOTORES / ENGINES / MOTORI
90° V6 Crossflow



Ref.	R.O.
REC337068	337068

MOTORES / ENGINES / MOTORI
90° V6 Loopcharged

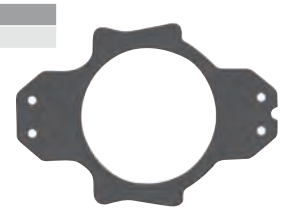

TUBOS AGUA CULATA
HOSE WATER CYLINDER HEAD
TUBI ACQUA TESTATE

Ref.	R.O.	
REC0340975	340975	Culata estribor / Starboary / tribordo
REC0340976	340976	Culata babor / Port / Babordo

MOTORES / ENGINES / MOTORI

90 (1994-95)
100 (1996-97)
115 (1994-97)
E88 (1996)
E90 (1996-98)
E100 (1996-97)
E112 (1996)
E115 (1996-98)
J88 (1996)
J90 (1996-98)
J100 (1997-98)
J112 (1996)
J115 (1996-98)


REC0340975


REC0340976

MUELLES VÁLVULA TERMOSTATO
THERMOSTAT VALVE SPRINGS
MOLLA VALVOLA TERMOSTATO

Ref.	R.O.
REC337067	337067
REC317245	317245

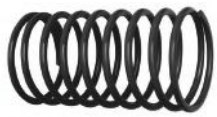

COMPONENTES CUERPO TERMOSTATO
THERMOSTAT HOUSING COMPONENTS
COMPONENTI CORPO TERMOSTATO

GRUESO
GROMMET
SPESSORE

Ref.	R.O.
REC321692	321692

MOTORES / ENGINES / MOTORI
V4 Crossflow



VÁLVULA
POPPET
VALVOLA

Ref.	R.O.	
REC318395	318395	V4
REC321027	321027	V6

MOTORES / ENGINES / MOTORI
Crossflow



DIAFRAGMA VÁLVULA
VALVE DIAPHRAGM
MEMBRANA VALVOLA

Ref.	R.O.
REC435957	321692

MOTORES / ENGINES / MOTORI
2 Cyl, 3 Cyl
V4 Loopcharged



Ref.	R.O.
REC394408	394408

MOTORES / ENGINES / MOTORI
V4 / V6 Loopcharged



Ref.	R.O.
REC321221	321221

MOTORES / ENGINES / MOTORI
V6 Crossflow

RETENEDOR MUELLE
SPRING RETAINER
TENUTA MOLLA

Ref.	R.O.
REC321220	321220

MOTORES / ENGINES / MOTORI
V6 Crossflow



ASIENTO VÁLVULA
VALVE SEAT
SEDE VALVOLA

Ref.	R.O.
REC320880	320880

MOTORES / ENGINES / MOTORI
V6 Crossflow



TAPA VÁLVULA
VALVE CUP
COPERCHIO VALVOLA

Ref.	R.O.
REC330273	330273

MOTORES / ENGINES / MOTORI
V4 / V6 Loopcharged



Ref.	R.O.
REC321222	321222

MOTORES / ENGINES / MOTORI
V6 Crossflow



ARANDELA
WASHER
RONDELLA

Ref.	R.O.
REC336185	336185

MOTORES / ENGINES / MOTORI
2 Cyl, 3 Cyl
V4 Loopcharged



CAMISA TERMOSTATO
THERMOSTAT SLEEVE
MANICOTTO TERMOSTATO

Ref.	R.O.
REC343105	343105



Ref.	R.O.
REC336178	336178

MOTORES / ENGINES / MOTORI
2 Cyl, 3 Cyl, V4 Looopcharged



Ref.	R.O.
REC337533	337533

MOTORES / ENGINES / MOTORI
90° V6 Looopcharged



CODO MANGUERA
HOSE ELBOW
TUBO A GOMITO

Ref.	R.O.	
REC126776	126776	5/16

MOTORES / ENGINES / MOTORI
60 - 70 HP (1988+)

Ref.	R.O.	
REC321886	321886	1/4

MOTORES / ENGINES / MOTORI
9.9 - 15 HP(1978-95)
20 - 35 HP (1978-80)
3 Cyl, V4 (-1978), V6 (1978-92)
40 - 60 HP, 2 Cyl (1978-90), (1978-91)

Ref.	R.O.	
REC321886	321886	3/8

MOTORES / ENGINES / MOTORI
V6 (1987-90) Loopcharged
V8 (1986-91)
Con dirección hidráulica.
With Power Steering.
Con timoneria idraulica.



GUIA TERMOSTATO
THERMOSTAT GUIDE
GUIDA TERMOSTATO

HP	AÑO YEAR ANNO	KIT TERMOSTATO THERMOSTAT SET KIT TERMOSTATO	TERMOSTATO THERMOSTAT TERMOSTATO	VÁLVULA VALVE VALVOLA	KIT VÁLVULA VALVE SET KIT VALVOLA	DIAFRAGMA DIAPHRAGM MEMBRANA	RETÉN VÁLVULA VALVE RETAINER TENUTA VALVOLA	TAPA VÁLVULA VALVE CUP COPERCHIO VALVOLA	MUELLE VÁLVULA VALVE SPRING MOLLA VALVOLA	GOMA GROMMET GOMMA
5	1965-68-86	REC13350	REC6F5-12411-03							
5.5	1959-64	REC13350	REC6F5-12411-03							
6	1965-79-86	REC13350	REC6F5-12411-03							
7.5	1980-86	REC13350	REC6F5-12411-03							
8	1986	REC13350	REC6F5-12411-03							
9.5	1964-73	REC13350	REC6F5-12411-03							
9.9	1974-86	REC13350	REC6F5-12411-03							
10	1959-63	REC13350	REC6F5-12411-03							
15	1974-86	REC13350	REC6F5-12411-03							
18	1959-73	REC13350	REC6F5-12411-03							
20	1981-94	REC13350	REC6F5-12411-03							
25	1969-94	REC13350	REC6F5-12411-03							
28	1989-94	REC13350	REC6F5-12411-03							
30	1986-94	REC13350	REC6F5-12411-03							
35	1959-76-94	REC13350	REC6F5-12411-03							
40	1960-69	REC13350	REC6F5-12411-03							
45	1989-92	REC13350	REC6F5-12411-03							
50	1971-75-79-81-86	REC13350	REC6F5-12411-03							
55	1976-92	REC13350	REC6F5-12411-03							
60	1969-70	REC13350	REC396987							
60	1980-86	REC13350	REC6F5-12411-03							
60,60 TTL	1993		REC878904							
65	1971-73	REC13450	REC396987							
65	1993		REC878904							
65C	1984-86	REC13450	REC396987							
65Jet	1994-95	REC13270	REC6F5-12411-03	REC318395					REC317245	REC321692
70	1974-86	REC13450	REC396987							
70,70 TTL	1993		REC878904							
75	1978-88	REC13450	REC396987							
80Jet	1994-95	REC13270	REC6F5-12411-03	REC318395					REC317245	REC321692
85	1978-80	REC13270	REC6F5-12411-03	REC318395					REC317245	REC321692
85	1993-95	GLM12370	REC6F5-12411-03	REC318395					REC317245	REC321692
88	1987-95	GLM12370	REC6F5-12411-03	REC318395					REC317245	REC321692
90	1983-95	GLM12370	REC6F5-12411-03	REC318395					REC317245	REC321692
90 Jet	1994	GLM12370	REC6F5-12411-03	REC318395					REC317245	REC321692
100	1979-80	GLM12370	REC6F5-12411-03	REC318395					REC317245	REC321692
100	1990-95	GLM12370	REC6F5-12411-03	REC318395					REC317245	REC321692
100 Comm	1984-95	GLM12370	REC6F5-12411-03	REC318395						
110	1985-89	GLM12370	REC6F5-12411-03	REC318395					REC317245	REC321692
112	1994-95	REC13270	REC6F5-12411-03	REC318395					REC317245	REC321692
115	1978-95	REC13270	REC6F5-12411-03	REC318395					REC317245	REC321692
120	1988-91					REC394408		REC330273		
140	1978-85	REC13270	REC6F5-12411-03	REC318395					REC317245	REC321692
140	1988-91					REC394408		REC330273		
150	1978-91	REC13350	REC6F5-12411-03	REC321027	REC320880	REC321221	REC321220	REC321222	REC317245	REC321692
155	1984-91	REC13350	REC6F5-12411-03	REC321027	REC320880	REC321221	REC321220	REC321222	REC317245	REC321692
175	1977-91	REC13350	REC6F5-12411-03	REC321027	REC320880	REC321221	REC321220	REC321222	REC317245	REC321692
185	1984-85	REC13350	REC6F5-12411-03	REC321027	REC320880	REC321221	REC321220	REC321222	REC317245	REC321692
200	1977-83	REC13350	REC6F5-12411-03	REC321027	REC320880	REC321221	REC321220	REC321222	REC317245	REC321692
200	1988-93					REC394408	REC321220	REC330273		
225	1988-93					REC394408	REC321220	REC330273		
235	1978-85	REC13350	REC6F5-12411-03	REC321027	REC320880	REC321221	REC321220	REC321222	REC317245	REC321692

COLAS
GEARCASE
PIEDI

2 & 3-CYL. LOOPCHARGED

COLA PEQUEÑA ESTILO "ANTIGUO"
SMALL GEARCASE "OLD" STYLE
PIEDE VECCHIA GENERAZIONE
(1975-88)

CARACTERÍSTICAS FÍSICAS:
Altura: 15-1/2".
Final de la aleta de cavitación afilado. Seis agujeros sobre la aleta de caviatición. Tomas internas de agua (cuatro agujeros). Sin tubo corredera.

PHYSICAL CHARACTERISTICS:
15-1/2" tall.
Pointed at the trailing end of the cavitation plate. Six holes above the cavitation plate. Internal water intake screens (four holes). No speedo pitot.

CARATTERISTICHE FISICHE:
Altezza:15-1/2".
Terminale pinna di cavitazione sottile.
Sei fori nella pinna, e prese d'acqua a 4 fori.
Senza tubo scorrevole.

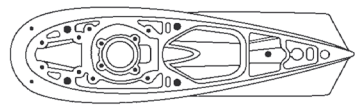

Vista superior
Top View
Vista superiore

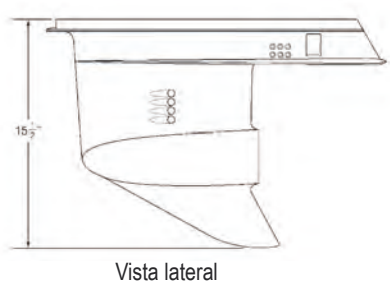

Vista lateral
Side View
Vista laterale

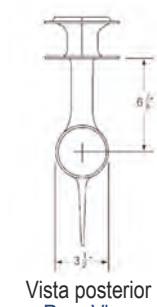

Vista posterior
Rear View
Vista posteriore

COLA PEQUEÑA ESTILO "MODERNO"
SMALL GEARCASE "NEW" STYLE
PIEDE MODERNA GENERAZIONE
(1989-05)

CARACTERÍSTICAS FÍSICAS:
Altura: 15-3/2".
Final de la aleta de cavitación afilado
Seis agujeros sobre la aleta de caviatición
Tomas externas de agua
Con tubo corredera

PHYSICAL CHARACTERISTICS:
15-3/4" tall.
Pointed at the trailing end of the cavitation plate.
Six holes above the cavitation plate.
External water intake screens.
Includes speedo pitot.

CARATTERISTICHE FISICHE:
Altezza:15-1/2".
Terminale pinna di cavitazione sottile.
Sei fori nella pinna, e prese d'acqua a 4 fori.
Senza tubo scorrevole.

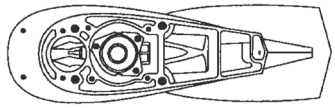

Vista superior
Top View
Vista superiore

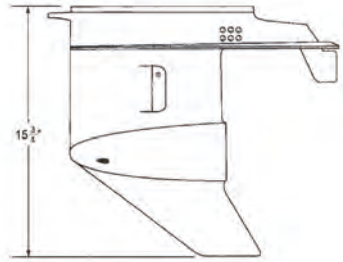

Vista lateral
Side View
Vista laterale

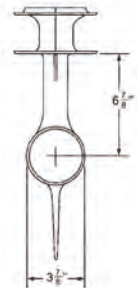

Vista posterior
Rear View
Vista posteriore

COLA LARGA
LARGE GEARCASE
PIEDE LUNGO
(1975-06)

CARACTERÍSTICAS FÍSICAS:
Altura: 17-7/6".
Final de la aleta de cavitación afilado
Seis agujeros sobre la aleta de caviatición
Tomas internas de agua (tres agujeros)
Sin tubo corredera

PHYSICAL CHARACTERISTICS:
17-7/16" tall.
Pointed at the trailing end of the cavitation plate.
Six holes above the cavitation plate.
Internal water intake screens (three holes).
No speedo pitot.

CARATTERISTICHE FISICHE:
Altezza:17-7/6".
Terminale pinna di cavitazione sottile.
Sei fori nella pinna, e prese d'acqua a 4 fori.
Senza tubo scorrevole.

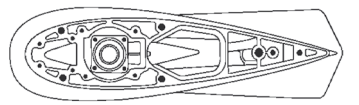

Vista superior
Top View
Vista superiore

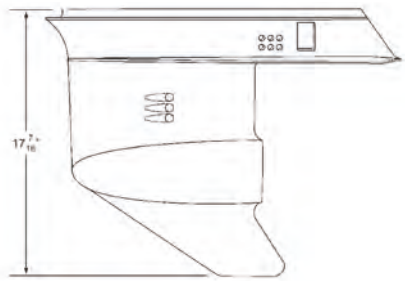

Vista lateral
Side View
Vista laterale

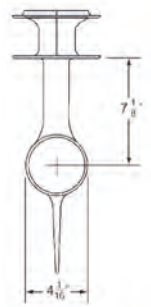

Vista posterior
Rear View
Vista posteriore

V4 90°

COLA PEQUEÑA
SMALL GEARCASE
PIEDE CORTO
(1978-98)

CARACTERÍSTICAS FÍSICAS:
Altura: 18-3/16"
Final de la aleta de cavitación afilado
Seis agujeros sobre la aleta de caviatición
Tomas internas de agua (cuatro agujeros)
Sin tubo corredera

PHYSICAL CHARACTERISTICS:
18-3/16" tall.
Pointed at the trailing end of the cavitation plate.
Six holes above the cavitation plate.
Internal water intake screens (four holes).
No pitot.

CARATTERISTICHE FISICHE:
Altezza: 18-3/16".
Terminale pinna di cavitazione sottile.
Sei fori nella pinna, e prese d'acqua a 4 fori.
Senza tubo scorrevole.

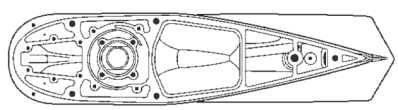

Vista superior
Top View
Vista superiore

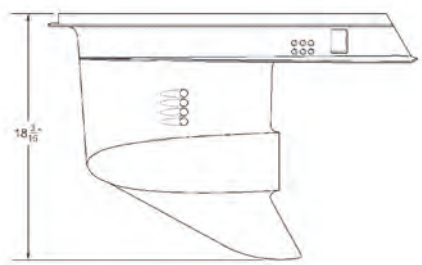

Vista lateral
Side View
Vista laterale

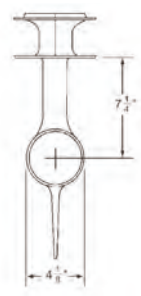

Vista posterior
Rear View
Vista posteriore

V4 60°

COLA PEQUEÑA
SMALL GEARCASE
PIEDE CORTO
(1995-06)

CARACTERÍSTICAS FÍSICAS:
Altura: 19-1/16".
Final de la aleta de cavitación plano
Dos ranuras sobre la aleta de caviatición
Tomas externas de agua

PHYSICAL CHARACTERISTICS:
19-1/16" tall.
Flat at the trailing end of the cavitation plate.
Two slots above the cavitation plate.
External water intake screens.

CARATTERISTICHE FISICHE:
Altezza: 19-1/6".
Terminale pinna di cavitazione piano.
Due fessure sopra la pinna di cavitazione.
Prese d'acqua esterne.

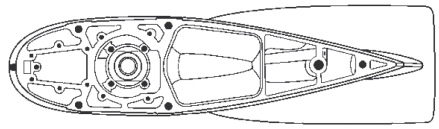

Vista superior
Top View
Vista superiore

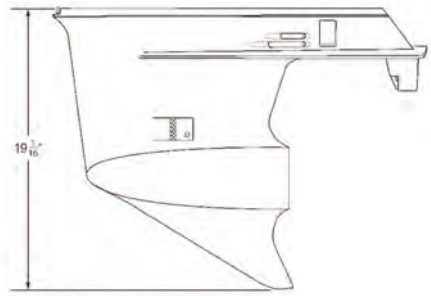

Vista lateral
Side View
Vista laterale

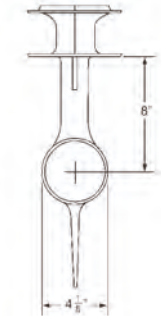

Vista posterior
Rear View
Vista posteriore

V4 / V6

COLA LARGA TIPO Ɵ "
LARGE GEARCASE Ɵ " TYPE
GAMBO LUNGO TIPO Ɵ "
(1979-06)

CARACTERÍSTICAS FÍSICAS:
Altura: 19-3/16"
Final de la aleta de cavitación afilado
Dos ranuras sobre la aleta de caviatición
Tomas externas de agua

PHYSICAL CHARACTERISTICS:
19-3/16" tall.
Pointed at the trailing end of the cavitation plate.
Two slots above the cavitation plate.
External water intake screens.

CARATTERISTICHE FISICHE:
Altezza: 19-3/6".
Terminale pinna di cavitazione sottile.
Due fessure sopra la pinna di cavitazione.
Prese d'acqua esterne.

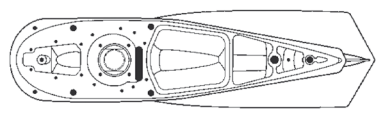

Vista superior
Top View
Vista superiore

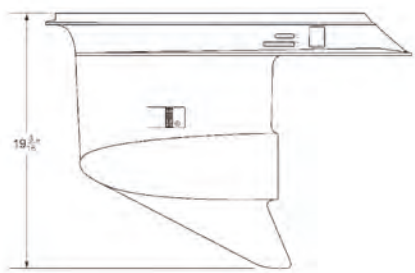

Vista lateral
Side View
Vista laterale

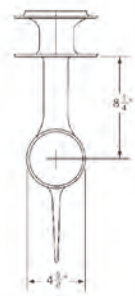

Vista posterior
Rear View
Vista posteriore

COLA LARGA TIPO Ɱ "
LARGE GEARCASE Ɱ " TYPE
GAMBO LUNGO TIPO Ɱ "
(2002-06)

CARACTERÍSTICAS FÍSICAS:
Altura: 19-3/16".
Final de la aleta de cavitación plano
Tres ranuras sobre la aleta de caviatición
Tomas externas de agua
Con tubo corredera

PHYSICAL CHARACTERISTICS:
19-3/16" tall.
Flat at the trailing end of the cavitation plate.
Three slots above the cavitation plate.
External water intake screens.
Includes speedo pitot.

CARATTERISTICHE FISICHE:
Altezza: 19-3/6".
Terminale pinna di cavitazione sottile.
Due fessure sopra la pinna di cavitazione.
Prese d'acqua esterne.
Con tubo scorrevole.

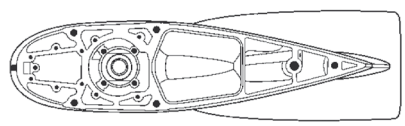

Vista superior
Top View
Vista superiore

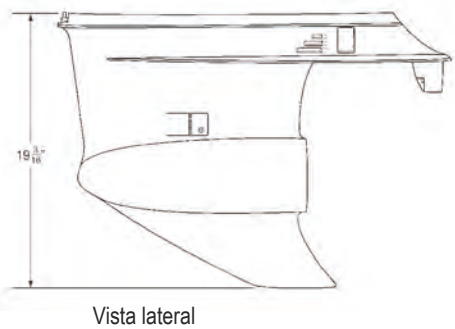

Vista lateral
Side View
Vista laterale

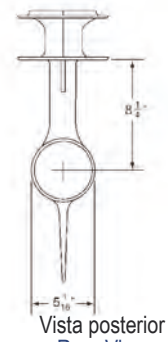

Vista posterior
Rear View
Vista posteriore

COLAS COMPLETAS
COMPLETE GEARCASE ASSEMBLY
PIEDI COMPLETI

40 / 48 / 50 HP

Ref.	R.O.	EJE SHAFT ASSE	AÑO YEAR ANNO
REC0435279	435279	15"	1993+



V4 / V6 "O"

CARCASA EMPTY GEARCASE CARCASSA	R.O.
REC5007022	439972, 438048

MOTORES / ENGINES / MOTORI
V4 (1978-06) Reducción / Gear Ratio / Riduzione: 2.25:1 (.44), 12:27
Crossflow (1983-96)
60° Loopcharged (1995-98)
90° Loopcharged (1985-98)

V6 (1978-06) Reducción / Gear Ratio / Riduzione: 1.83:1 (.55), 12:22 Heavy Duty
Crossflow (1979-92)
60° Loopcharged (1991-05)
90° Loopcharged (1986-05)

Sin tubo corredera
Without speedo.
Senza tubo scorrevole.



CARCASA EMPTY GEARCASE CARCASSA	R.O.
REC439973	439973

MOTORES / ENGINES / MOTORI
V6 (1978-06) Reducción / Gear Ratio / Riduzione: 1.83:1 (.55), 12:22 Heavy Duty
Crossflow (1979-92)
60° Loopcharged (1991-01)
90° Loopcharged (1986-01)

Con tubo corredera.
With speedo.
Con tubo scorrevole.



GUÍA COLAS
GEARCASE ASSEMBLY APPLICATIONS
GUIDE PIEDI

HP	AÑO YEAR ANNO	COMPLETA COMPLETE COMPLETA	CARCASA HOUSING CARCASSA
40 15"	93+	**REC0435279**	
48 15"	93+	**REC0435279**	
50 15"	93+	**REC0435279**	
100 WPL 20"	1999		**REC5007022**
100 WPX 25"	1999		**REC5007022**
100 Comm. 20" Large	1988-97		**REC5007022**
100 Comm. 25" Large	1988-97		**REC5007022**
100 WQX, 105 WEX 25"	1998		**REC5007022**
105 Comm. WPL 20"	2000-01		**REC5007022**
105 Comm. WPX 25"	2000-01		**REC5007022**
105 Comm. WEL 20"	2000-01		**REC5007022**
105 WEL 20"	1998		**REC5007022**
105 WRL 20"	1997-98		**REC5007022**
105 WRX 25"	1997-98		**REC5007022**
105 RWL 20"	1998		**REC5007022**
105 RWY 22.5"	1998		**REC5007022**
105 RWX 25"	1998		**REC5007022**
115 FPX/FX 25"	2000-01		**REC5007022**
125 RWL 20"	1995-97		**REC5007022**
125 RWY 22.5"	1995-98		**REC5007022**
125 WTPL 20"	1992-98		**REC5007022**
125 WTPX 25"	1988-98		**REC5007022**
130 20"	1995-98		**REC5007022**
130 25"	1995-98		**REC5007022**
130 25" C/R	1995-97		**REC5007022**
135 FPL/FL 20"	2000-01		**REC439973**
135 FSL/FS 20"	2000-01		**REC5007022**
135 FPX/FX 25"	2000-01		**REC5007022**
140 25"	1988-94		**REC5007022**
140 25" C/R	1988-94		**REC439973**
V4 60° Loopcharged 25"	1995-06		**REC5007022**
V6 60° Loopcharged 20" W/ External Screens	1995-00		**REC5007022**
V6 60° Loopcharged 25" W/ External Screens	1991-99		**REC5007022**
V6 60° Loopcharged 25" C/R	1992-99		**REC5007022**
150 Comm. 20"	1993-99		**REC5007022**
150 Comm. 25"	1993-99		**REC5007022**
155 Comm. 20"	1988-92		**REC5007022**
155 Comm. 25"	1988-92		**REC5007022**
V6 Crossflow 20" & 90° Loopcharged	88-91		**REC439973**
V6 Crossflow 25" & 90° Loopcharged	88-91		**REC439973**
V6 Crossflow 20" & 90° Loopcharged C/R	88-91		**REC439973**
V6 90° Loopcharged 20"w/ Internal Screens	92-99		**REC439973**
V6 90° Loopcharged 20" w/ External Screens	92-99		**REC5007022**
V6 90° Loopcharged 25"	92-99		**REC5007022**
V6 90° Loopcharged 25" C/R	92-99		**REC5007022**
V6 90° Loopcharged 30"	93-99		**REC5007022**
V6 90° Loopcharged 30" C/R	93-99		**REC5007022**
200 Comm. 20"	93-99		**REC5007022**
200 Comm. 25"	93-99		**REC5007022**

DESPIECE COLA
GEARCASE COMPONENTS
ESPLOSO PIEDE

2 TIEMPOS STROKES

4, 4.5, 5, 6, 7.5, 8 HP (1980+)

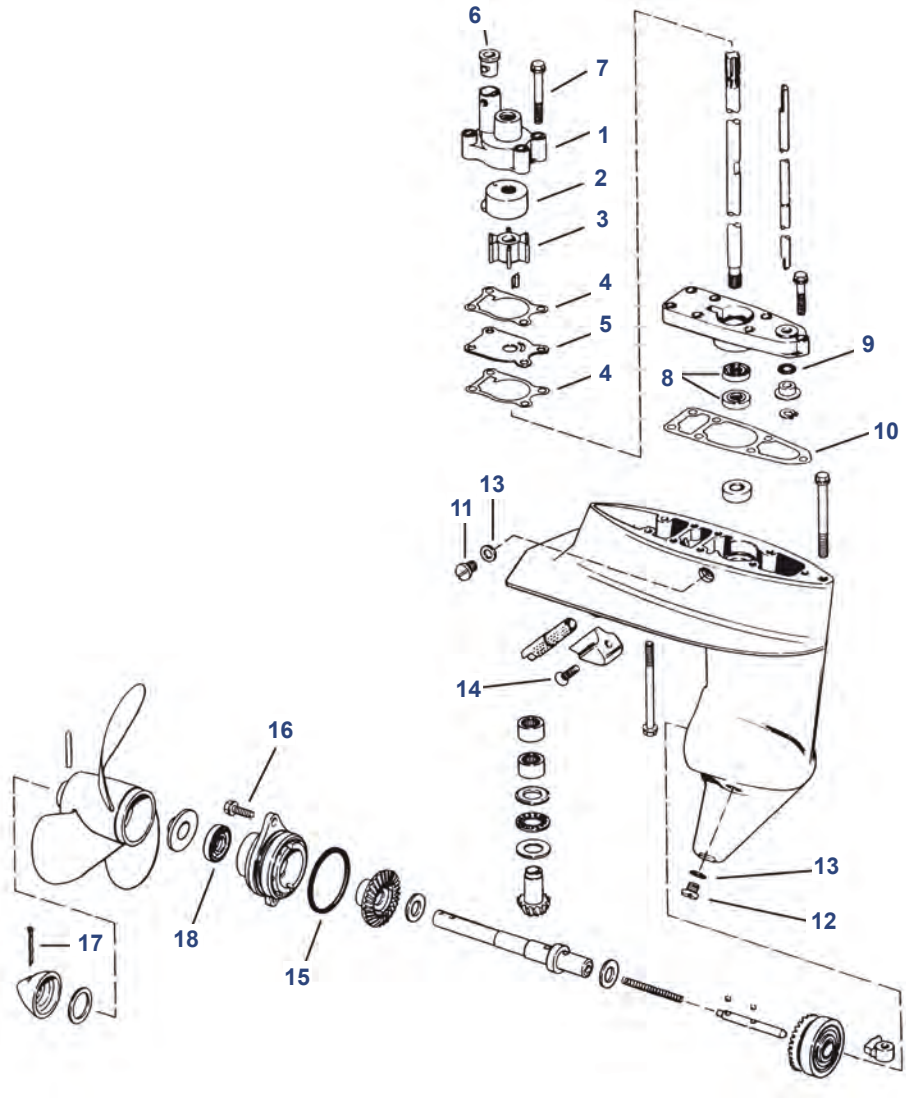

Nº	REF	R.O./OEM	Descripción	Description	Descrizione
1	**REC389577**	389577	CUERPO BOMBA	PUMP HOUSING	CORPO POMPA
2	**REC324641**	324641	TAPA BOMBA	PUMP CUP	COPERCHIO POMPA
3	**REC389576**	436137	IMPULSOR	IMPELLER	GIRANTE
4	**REC325040**	325040	JUNTA	GASKET	GUARNIZIONE
5	**REC324640**	324640	TAPA	WEAR PLATE	COPERCHIO
6	**REC302497**	302497	GRUESO	GROMMET	SPESSORE
7	**REC331980**	331980	TORNILLO	SCREW	VITE
8	**REC324639**	324639	RETÉN ACEITE	OIL SEAL	PARAOLIO
9	**REC305242**	305242	ARO	O-RING	O-RING
10		324637	JUNTA	GASKET	GUARNIZIONE
11	**REC10-79953Q04**	307551	JUEGO TORNILLOS	SCREW SET	KIT VITERIA
12	**REC22-67892A05**	318544	JUEGO TORNILLOS DRENAJE	DRAINING SCREW SET	KIT VITERIA DRENAGGIO
13	**REC12-191833**	307552	JUNTA	GASKET	GUARNIZIONE
14	**REC328725**	328725	TORNILLO	SCREW	VITE
15	**REC322494**	322494	ARO	O-RING	O-RING
16	**REC328744**	328744	TORNILLO	SCREW	VITE
17	**REC3852056**	306394	PASADOR	COTTER PIN	CHIAVISTELLO
18	**REC336493**	336493	RETÉN ACEITE	OIL SEAL	PARAOLIO

9.9, 15 HP (1974+)

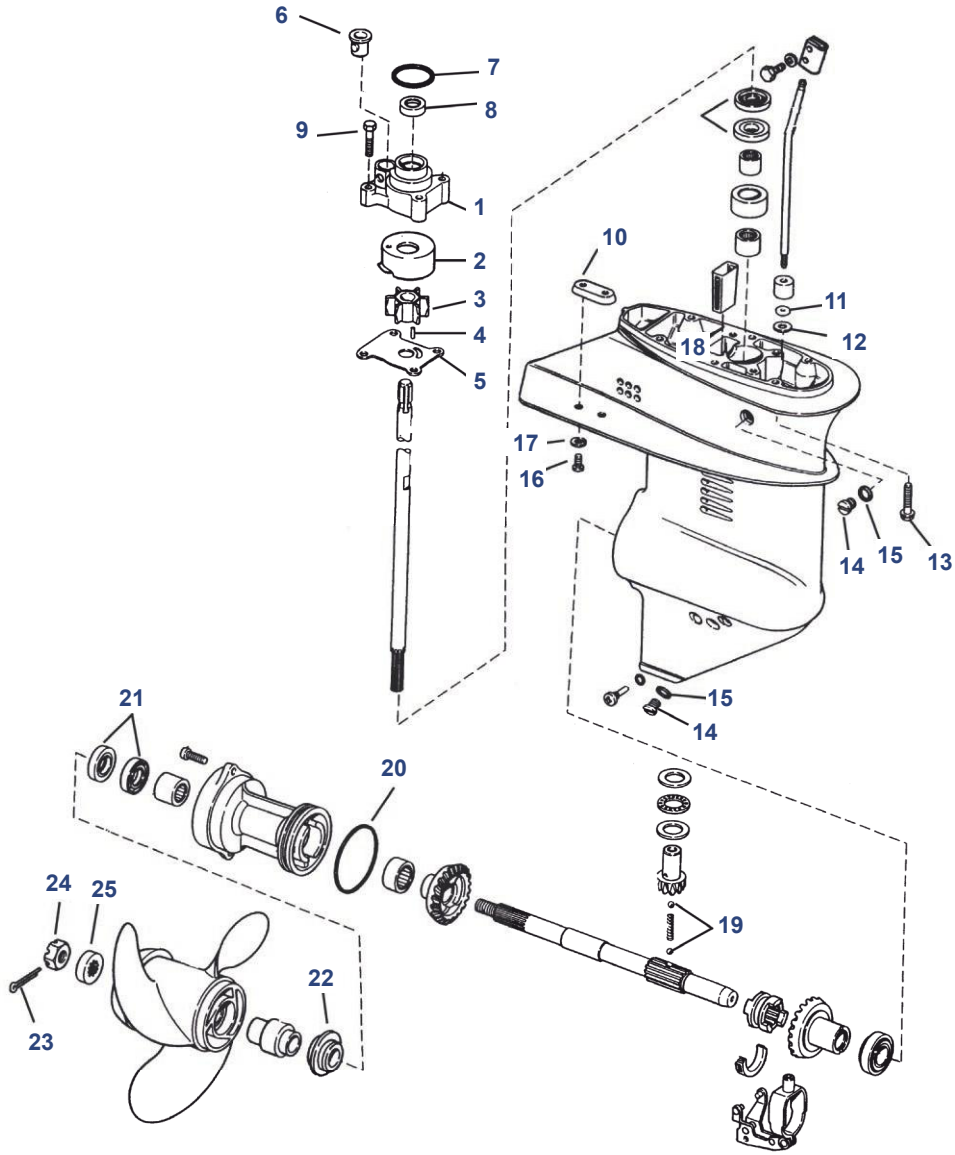

Nº	REF	R.O./OEM	Descripción	Description	Descrizione
1	**REC435390**	435390	CUERPO BOMBA	PUMP HOUSING	CORPO POMPA
2	**REC324097**	324097	TAPA BOMBA	PUMP CUP	COPERCHIO POMPA
3	**REC386084**	386084	IMPULSOR	IMPELLER	GIRANTE
4	**REC300611**	300611	LLAVE	KEY	CHIAVE
5	**REC318995**	318995	TAPA	WEAR PLATE	COPERCHIO
6	**REC302497**	302497	GRUESO	GROMMET	SPESSORE
7	**REC319085**	319085	ARO	O-RING	O-RING
8	**REC318972**	318972	RETÉN ACEITE	OIL SEAL	PARAOLIO
9	**REC302325**	302325	TORNILLO	SCREW	VITE
10	**REC321480**	321480	RETÉN ACEITE	OIL SEAL	PARAOLIO
11	**REC301877**	301877	ARO	O-RING	O-RING
12	**REC321738**	321738	ARANDELA	WASHER	RONDELLA
13	**REC324334**	324334	TORNILLO	SCREW	VITE
14	**REC10-79953Q04**	307551	JUEGO TORNILLO	SCREW SET	KIT VITERIA
15	**REC12-191833**	307552	JUNTA	GASKET	GUARNIZIONE
16	**REC306643**	306643	TORNILLO	SCREW	VITE
17	**REC304454**	304454	CIERRE	LOCKWASHER	CHIUSURA
18	**CM123009**	173029	ÁNODO	ANODE	ANODO
19	**REC316506**	316506	BOLA	DETENT BALL	PALLA
20	**REC308627**	308627	ARO	O-RING	O-RING
21	**REC321481**	321481	RETÉN ACEITE	OIL SEAL	PARAOLIO
22	**REC334590**	334590	CIERRE	THRUST WASHER	CHIUSURA
23	**REC328522**	328522	PASADOR	COTTER PIN	CHIAVISTELLO
24	**REC318971**	318971	TUERCA	NUT	DADO
25	**REC323942**	323942	ESPACIADOR	SPACER	DISTANZIATORE

ESCAPE POR HÉLICE / THRU-PROP EXHAUST / SCARICO ALL'ELICA
20 - 35 HP 2 CYL CROSSFLOW (1980-05)
25, 30, 35 HP 3 CYL LOOPCHARGED (1996-01)

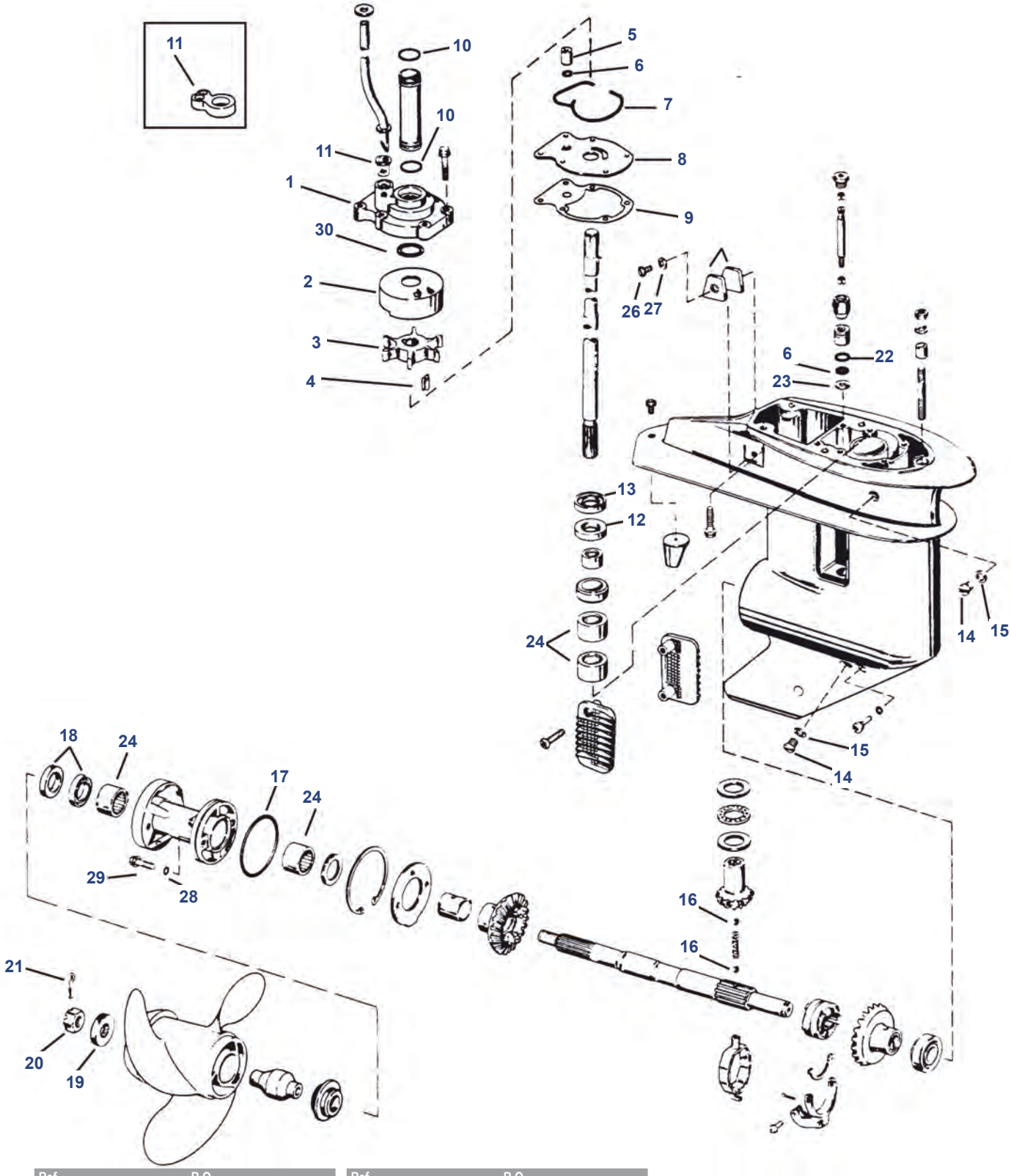

Ref.	R.O.
REC396351	396351



Kit retenes cola
Seal kit
Kit paraolio

Ref.	R.O.
REC393630	393630



Kir reparación bomba de agua
Water pump service kit
Kit riparazionen pompa acqua

Nº	REF	R.O./OEM	Descripción	Description	Descrizione
1	**REC393632**	393632	CUERPO BOMBA 2 CIL.	PUMP HOUSING 2-CYL.	CORPO POMPA 2 Cil
1		339720	CUERPO BOMBA 3 CIL. (1996-01)	PUMP HOUSING 3-CYL. (1996-01)	COPERCHIO POMPA 3 Cil (1996-01)
2	**REC328751**	328751	TAPA BOMBA	PUMP CUP	COPERCHIO POMPA
3	**REC395289**	395289	IMPULSOR	IMPELLER	GIRANTE
4	**REC344470**	344470	LLAVE	KEY	CHIAVE
5	**REC328754**	328754	GRUESO PARA REC393632	BUSHING (FOR REC393632)	SPESSORE PER REC393632
6	**REC301877**	301877	ARO PARA REC393632	O-RING (FOR REC393632)	O-RING PER REC393632
7	**REC328753**	328753	RETÉN	SEAL	PARAOLIO
8	**REC328755**	328755	TAPA BOMBA	WEAR PLATE	COPERCHIO POMPA
9	**REC325537**	325537	JUNTA	GASKET	GUARNIZIONE
10	**REC25-62705**	311338	ARO	O-RING	O-RING
11	**REC302497**	302497	GRUESO PARA REC393632	GROMMET (FOR REC393632)	SPESSORE PER REC393632
11	**REC340811**	340811	GRUESO	GROMMET	SPESSORE
12	**REC321928**	321928	RETÉN ACEITE	OIL SEAL	PARAOLIO
13	**REC332261**	332261	RETÉN ACEITE	OIL SEAL	PARAOLIO
14	**REC10-79953Q04**	307551	JUEGO TORNILLOS	SCREW SET	KIT VITERIA
15	**REC3855081**	311598	JUNTA	GASKET	GUARNIZIONE
16	**REC316506**	316506	BOLA	BALL	PALLA
17	**REC338518**	338518	ARO	O-RING	O-RING
18	**REC26-69188**	321453	RETÉN ACEITE	OIL SEAL	PARAOLIO
19	**REC323943**	323943	ESPACIADOR HÉLICE	PROP SPACER	DISTANZIATORE ELICA
20	**REC319891**	319891	TUERCA HÉLICE	PROP NUT	DADO ELICA
21	**REC320785**	320785	PASADOR	COTTER PIN	CHIAVISTELLO
22	**REC303347**	303347	ARO	O-RING	O-RING
23	**REC321738**	321738	JUNTA	GASKET	GUARNIZIONE
24	**REC437288**	437288	COJINETE (1994+)	BEARING (1994+)	CUSCINETTO (1994+)
24		376856	COJINETE (-1993)	BEARING (-1993)	CUSCINETTO (-1993)
25		324960	TORNILLO	SCREW	VITE
26		333677	TORNILLO	SCREW	VITE
27	**REC304454**	304454	CIERRE	LOCKWASHER	CHIUSURA
28	**REC26-01674**	332583	ARO	O-RING	O-RING
29	**REC320041**	320041	TORNILLO	SCREW	VITE
30	**REC0554545**	554545	ARO	O-RING	O-RING

ESCAPE A TRAVÉS DE ALETA DE CAVITACIÓN
THRU-CAVITATION PLATE EXHAUST
SCARICO ATTRAVERSO LA PINNA DI CAVITAZIONE
25 - 28 HP 2 CYL CROSSFLOW (1978-97)

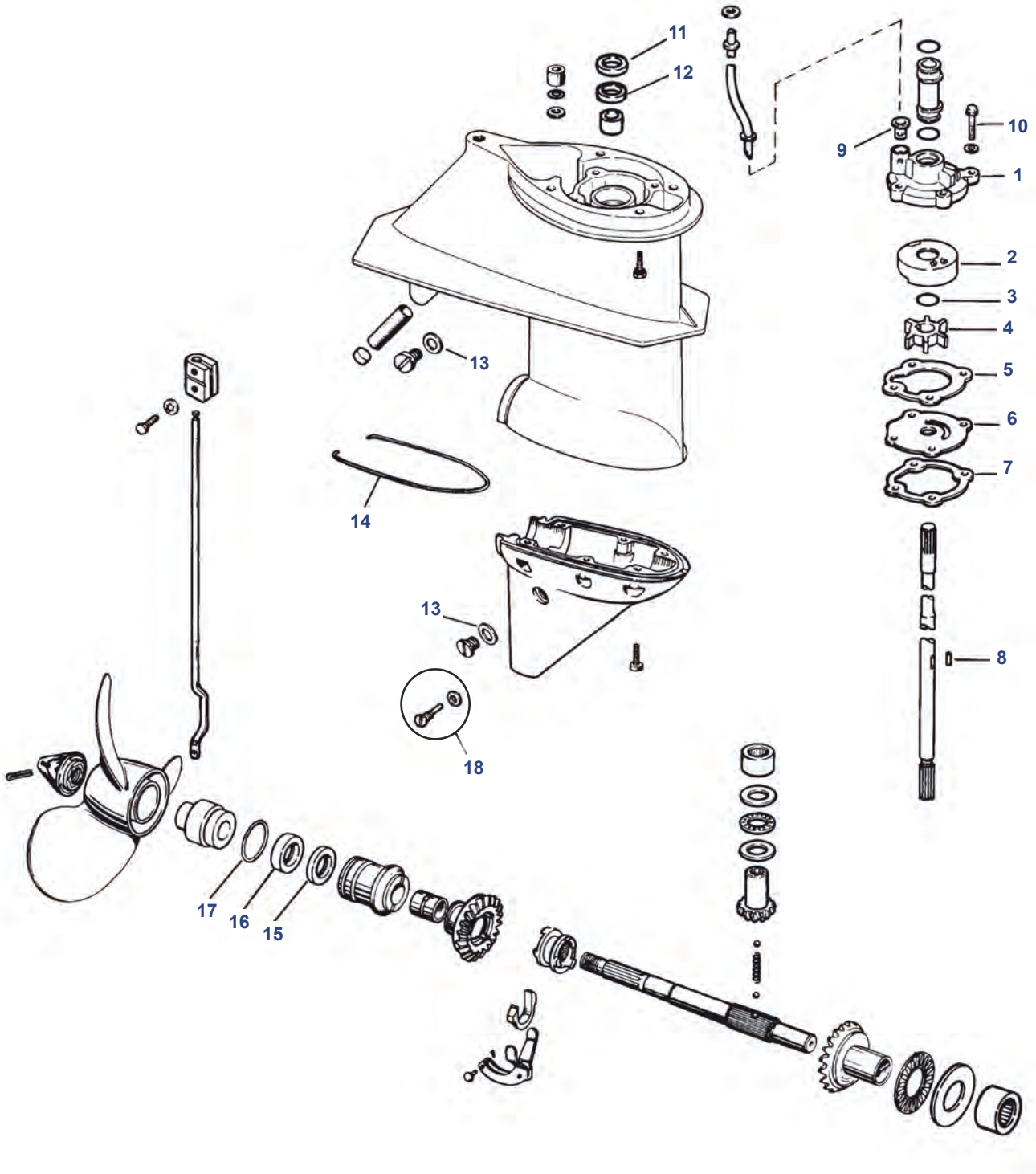

Nº	REF	R.O./OEM	Descripción	Description	Descrizione
1	**REC330560**	330560	CUERPO BOMBA	PUMP HOUSING	CORPO POMPA
2	**REC328751**	328751	TAPA BOMBA	PUMP CUP	COPERCHIO POMPA
3	**REC301967**	301967	ARO	O-RING	O-RING
4	**REC395289**	395289	IMPULSOR	IMPELLER	GIRANTE
5	**REC329390**	329390	JUNTA	GASKET	GUARNIZIONE
6	**REC765642**	329391	TAPA	PLATE	COPERCHIO
7	**REC324449**	324449	JUNTA	GASKET	GUARNIZIONE
8	**REC344470**	330619	LLAVE	KEY	CHIAVE
9	**REC302497**	302497	GRUESO	GROMMET	SPESSORE
10	**REC302325**	324960	TORNILLO	SCREW	VITE
11	**REC330327**	330327	CIERRE SUPERIOR EJE COLA	DRIVE SHAFT SEAL UPPER	CHIUSURA SUPERIORE ASSE PIEDE
12	**REC321459**	321459	CIERRE INFERIOR EJE COLA	DRIVE SHAFT SEAL LOWER	CHIUSURA INFERIORE ASSE PIEDE
13	**REC3855081**	311598	JUNTA TAPÓN DRENAJE	DRAIN PLUG GASKET	GUARNIZIONE COPERCHIO DRENAGGIO
13	**REC333572**	333572	ARO TAPÓN DRENAJE	O-RING DRAIN PLUG	O-RING COPERCHIO DRENAGGIO
14	**REC309004**	309004	RETÉN	SEAL	PARAOLIO
15	**REC321459**	321459	RETÉN INTERIOR EJE HÉLICE	INNER PROP SHAFT SEAL	PARAOLIO INTERNO ASSE ELICA
16	**REC321787**	321787	RETÉN EXTERIOR EJE HÉLICE	OUTER PROP SHAFT SEAL	PARAOLIO ESTERNO ASSE ELICA
17	**REC321921**	321921	ARO	O-RING	O-RING
18	**REC10-79953Q04**	307551	TORNILLO	SCREW SET	VITE

COLA PEQUEÑA / SMALL GEARCASE / PIEDE CORTO
40 - 50 HP 2 CYL LOOPCHARGED (1989-05)

Ref.	R.O.
REC22660	397627 + 345992 + 332491



Kit piñones
Pinion kit
Kit pignoni

Nº	REF	R.O./OEM	Descripción	Description	Descrizione
1	**REC438544**	438544	CUERPO BOMBA (1989-98)	PUMP HOUSING (1989-98)	CORPO POMPA (1989-98)
1	**REC438545**	438545	CUERPO BOMBA (1995-01, 2004-05)	PUMP HOUSING (1995-01) (2004-05)	CORPO POMPA (1995-01), (2004-05)
2	**REC302325**	302325	TORNILLO	SCREW	VITE
3	**REC333758**	333758	GRUESO	GROMMET	SPESSORE
4	**REC341732**	341732	GRUESO	GROMMET	SPESSORE
5	**REC310584**	310584	ARO	O-RING	O-RING
6	**REC340619**	340619	TAPA BOMBA	PUMP CUP	COPERCHIO POMPA
7	**REC432941**	432941	IMPULSOR (1989-02)	IMPELLER (1989-02)	GIRANTE (1989-02)
8	**REC331188**	331188	ARO	O-RING	O-RING
9	**REC334897**	334897	LLAVE	KEY	CHIAVE
10	**REC324981**	324981	RETÉN	SEAL	TENUTA
11	**REC341038**	341038	TAPA	WEAR PLATE	COPERCHIO
12	**REC336530**	336530	JUNTA	GASKET	GUARNIZIONE
13	**REC342786**	342786	RETÉN ACEITE	OIL SEAL	PARAOLIO
14	**REC317624**	317624	TORNILLO	SCREW	VITE
15	**REC398874**	398874	COJINETE	BEARING	CUSCINETTO
16	**REC435274**	435274	CUERPO COJINTE	BEARING HOUSING ASSEMBLY	CORPO CUSCINETTO
17	**REC25-30224**	310327	ARO	O-RING	O-RING
18	**REC333771**	333771	ARANDELA	THRUST WASHER	RONDELLA
19	**REC398901**	398901	ARANDELA COJINETE	THRUST BEARING	RONDELLA CUSCINETTO
20	**REC382343**	382343	COJINETE	BEARING	CUSCINETTO
21		397627	KIT PIÑONES	GEAR SET	KIT PIGNONI
22		332489	PÑÓN MARCHA ATRÁS	REVERSE GEAR	PIGNONE MARCIA INDIETRO
23	**REC332491**	332491	SELECTOR	CLUTCH DOG	SELETTORE
24	**REC320311**	320311	MUELLE	SPRING	MOLLA
25	**REC320310**	320310	PASADOR	CROSS PIN	CHIAVISTELLO
26		333780	CASQUILLO	BUSHING	GHIERA
27	**REC318372**	318372	ARO	O-RING	O-RING
28	**REC434588**	434588	TAPA ACOPLAMIENTO	COVER & BUSHING ASSEMBLY	COPERCHIO ACCOPPIAMENTO
29	**REC3852928**	913921	ARO	O-RING	O-RING
30	**REC306376**	306376	PASADOR	COTTER PIN	CHIAVISTELLO
31	**REC305282**	305282	TORNILLO	SCREW	VITE
32	**REC330265**	330265	ARANDELA	WASHER	RONDELLA
33	**REC22-67892A05**	318544	TORNILLO DRENAJE	DRAINING SCREW	VITE DRENAGGIO
34	**REC3855081**	311598	JUNTA	GASKET	GUARNIZIONE
35	**REC316506**	316506	BOLA	BALL	PALLA
36	**REC432264**	432264	COJINETE	BEARING	CUSCINETTO
37	**REC382407**	382407	COJINETE	BEARING	CUSCINETTO
38	**REC333725**	333725	ARANDELA	THRUST WASHER	RONDELLA
39	**REC397538**	397538	ARANDELA COJINETE	THRUST BEARING	RONDELLA CUSCINETTO
40	**REC397537**	397537	ARANDELA COJINETE	THRUST BEARING	RONDELLA CUSCINETTO
41	**REC332514**	332514	ARANDELA	THRUST WASHER	RONDELLA
42	**REC386764**	386764	COJINETE	BEARING	CUSCINETTO
43	**REC553126**	553126	ARO	O-RING	O-RING
44	**REC386765**	386765	COJINETE	BEARING	CUSCINETTO
45	**REC321467**	321467	RETÉN ACEITE	OIL SEAL	PARAOLIO
46	**REC320305**	320305	ARANDELA	THRUST WASHER	RONDELLA
47	**REC315810**	315810	ESPACIADOR HÉLICE	PROP SPACER	DISTANZIATORE ELICA
48	**REC314503**	314503	TUERCA HÉLICE	PROP NUT	DADO ELICA
49	**REC314502**	314502	PASADOR	COTTER PIN	CHIAVISTELLO
50	**REC439138**	439138	EJE HÉLICE	PROP SHAFT	ASSE ELICA
51	**REC432276**	432276	COJINETE DIÁBOLO	BEARING CARRIER	CUSCINETTO
52	**REC328744**	328744	TORNILLO	SCREW	VITE
53	**CM398873**	398873	ÁNODO	ANODE	ANODO
53	**CM398873A**	398873	ÁNODO ALUMINIO	ALUMINUM ANODE	ANODO ALLUMINIO
54	**REC328694**	328694	TORNILLO	SCREW	VITE
55	**REC309243**	309243	TORNILLO	SCREW	VITE
56	**REC336982**	336982	ARO	O-RING	O-RING
57	**REC324852**	324852	TORNILLO	SCREW	VITE
58	**REC332584**	332584	CIERRE	SEAL	CHIUSURA
59	**REC313339**	313339	TUERCA PIÑÓN	PINION NUT	DADO PIGNONE

COLA PEQUEÑA / SMALL GEARCASE / PIEDE CORTO
40 - 60 HP 2 CYL LOOPCHARGED (1975-88)
60 - 75 HP 2 CYL LOOPCHARGED (1975-88)

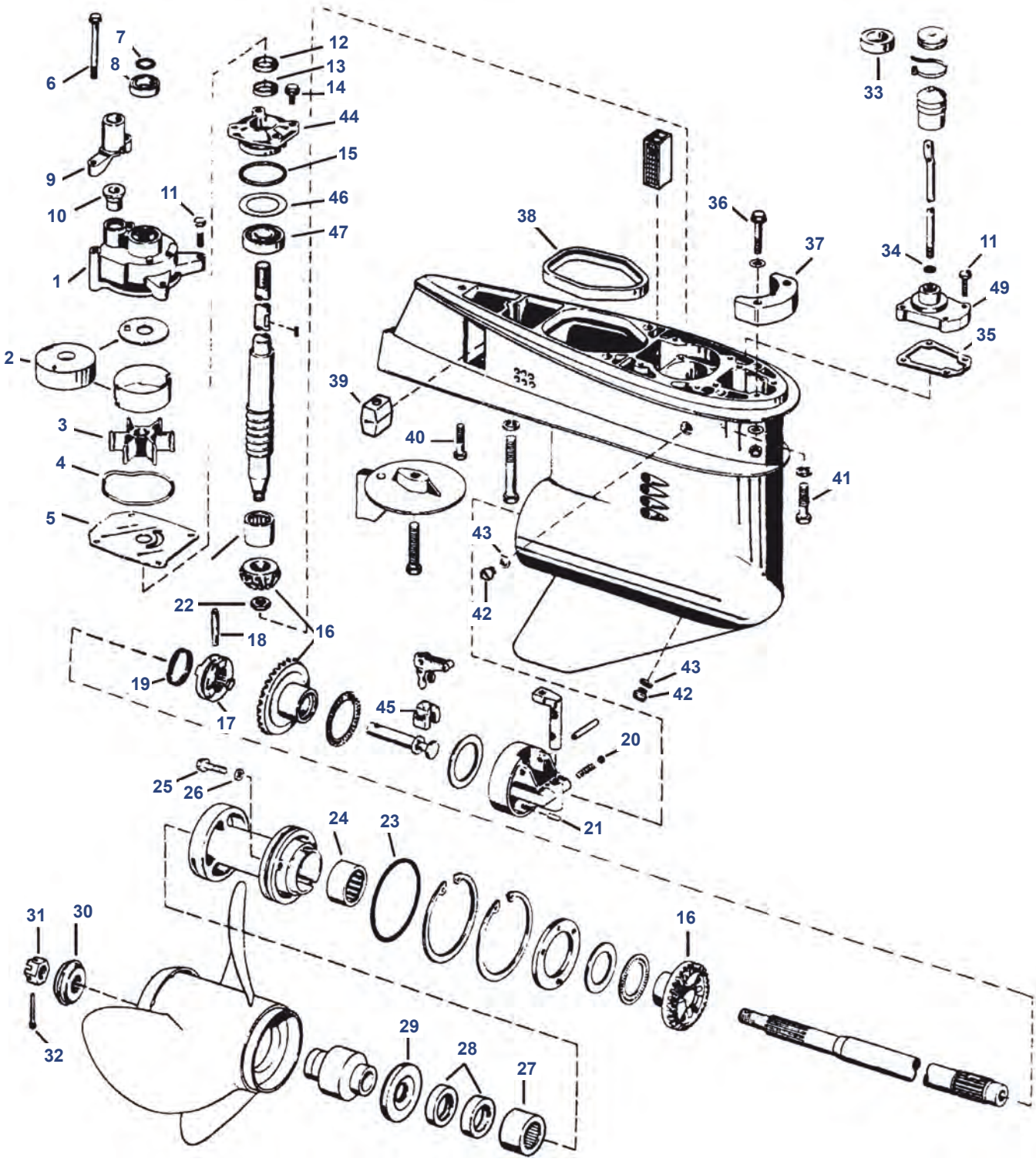

Nº	REF	R.O./OEM	Descripción	Description	Descrizione
1	**REC384087**	384087	CUERPO BOMBA	PUMP HOUSING	CORPO POMPA
2	**REC320775**	320775-6	TAPA BOMBA	PUMP CUP	COPERCHIO POMPA
3	**REC777213**	377230	IMPULSOR (1975-78)	IMPELLER (1975-78)	GIRANTE (1975-78)
	REC308928	308928	LLAVE (1975-78)	KEY (1975-78)	CHIAVE (1975-78)
3	**REC777214**	396809	IMPULSOR (1979-88)	IMPELLER (1979-88)	GIRANTE (1979-88)
	REC331901	331901	LLAVE BLANCA (1979-88)	KEY, WHITE (1979-88)	CHIAVE, BIANCO (1979-88)
	REC344470	344470	LLAVE NEGRA (1979-88)	KEY, BLACK (1979-88)	CHIAVE, NERO (1979-88)
4	**REC315788**	315788	RETÉN	SEAL	TENUTA
5	**REC320981**	320981	TAPA	WEAR PLATE	COPERCHIO
6	**REC331980**	331980	TORNILLO	SCREW	VITE
7	**REC339543**	303059	ARO	O-RING	O-RING
8	**REC341732**	341732	GRUESO	GROMMET	SPESSORE
9	**REC315838**	315838	TUBO GUÍA	TUBE GUIDE	TUBO GUIDA
10	**REC315837**	315837	GRUESO	GROMMET	SPESSORE
11	**REC302325**	302325	TORNILLO	SCREW	VITE
12	**REC342786**	332205	RETÉN ACEITE	OIL SEAL	PARAOLIO
13	**REC342786**	321466	RETÉN ACEITE	OIL SEAL	PARAOLIO
12,13	**REC333771**	342786	RETÉN ACEITE (UNA PIEZA)	OIL SEAL (ONE PIECE)	PARAOLIO (UN PEZZO)
14	**REC909386**	909386	TORNILLO	SCREW	VITE
15	**REC302588**	302588	ARO	O-RING	O-RING
16	**REC433570**	433570	KIT PIÑONES	GEAR SET	KIT PIGNONI
17	**REC319895**	319895	SELECTOR	CLUTCH DOG	SELETTORE
18	**REC320310**	320310	PASADOR	CROSS PIN	CHIAVISTELLO
19	**REC320311**	320311	MUELLE	SPRING	MOLLA
20	**REC160084**	160084	BOLA	DETENT BALL	PALLA
21		331880	PASADOR	PIN	CHIAVISTELLO
22	**REC313339**	313339	TUERCA PIÑÓN	PINION NUT	DADO PIGNONE
23	**REC925093**	320303	ARO	O-RING	O-RING
24	**REC386764**	386764	COJINETE	BEARING	CUSCINETTO
25	**REC320041**	320041	TORNILLO	SCREW	VITE
26	**REC332584**	332584	ARO	O-RING	O-RING
27	**REC386765**	386765	COJINETE	BEARING	CUSCINETTO
28	**REC321467**	321467	RETÉN ACEITE	OIL SEAL	PARAOLIO
29	**REC320305**	320305	ARANDELA	THRUST WASHER	RONDELLA
30	**REC315810**	315810	ESPACIADOR HÉLICE	PROP SPACER	DISTANZIATORE ELICA
31	**REC314503**	314503	TUERCA HÉLICE	PROP NUT	DADO ELICA
32	**REC314502**	314502	PASADOR	COTTER PIN	CHIAVISTELLO
33	**REC305762**	305762	GRUESO	GROMMET	SPESSORE
34	**REC318372**	318372	ARO	O-RING	O-RING
35	**REC314082**	314082	JUNTA	GASKET	GUARNIZIONE
36	**REC331980**	324430	TORNILLO	SCREW	VITE
37	**CM392462**	392462	ÁNODO	ANODE	ANODO
38	**REC324937**	324937	RETÉN	SEAL	TENUTA
39	**CM393023**	436745	ÁNODO	ANODE	ANODO
40	**REC328096**	328096	TORNILLO	SCREW	VITE
41	**REC305282**	305282	TORNILLO	SCREW	VITE
42	**REC10-79953Q04**	307551	TORNILLO	SCREW	VITE
43	**REC3855081**	311598	JUNTA	GASKET	GUARNIZIONE
44		387067	CUERPO COJINETE Y RETÉN	BEARING HOUSING & SEAL	CORPO CUSCINETTO E PARAOLIO
45	**REC334163**	334163	CUNA	CRADLE	ARTICOLAZIONE
46	**REC320166**	320166	SUPLEMENTO .003	SHIM .003	SPESSORE .003
46	**REC320167**	320167	SUPLEMENTO .004	SHIM .004	SPESSORE .004
46	**REC320168**	320168	SUPLEMENTO .005	SHIM .005	SPESSORE .005
47	**REC31-32575T1**	385175	COJINETE	BEARING	CUSCINETTO
48	**REC386766**	386766	PIÑÓN COJINETE	PINION BEARING	PIGNONE CUSCINETTO
49		387336	TAPA Y RETÉN	COVER & SEAL ASSEMBLY	COPERCHIO E PARAOLIO

COLA LARGA / LARGE GEARCASE / PIEDE LUNGO
40 - 60 HP 2 CYL LOOPCHARGED (1975-06)
60 - 75 HP 2 CYL LOOPCHARGED (1975-01)

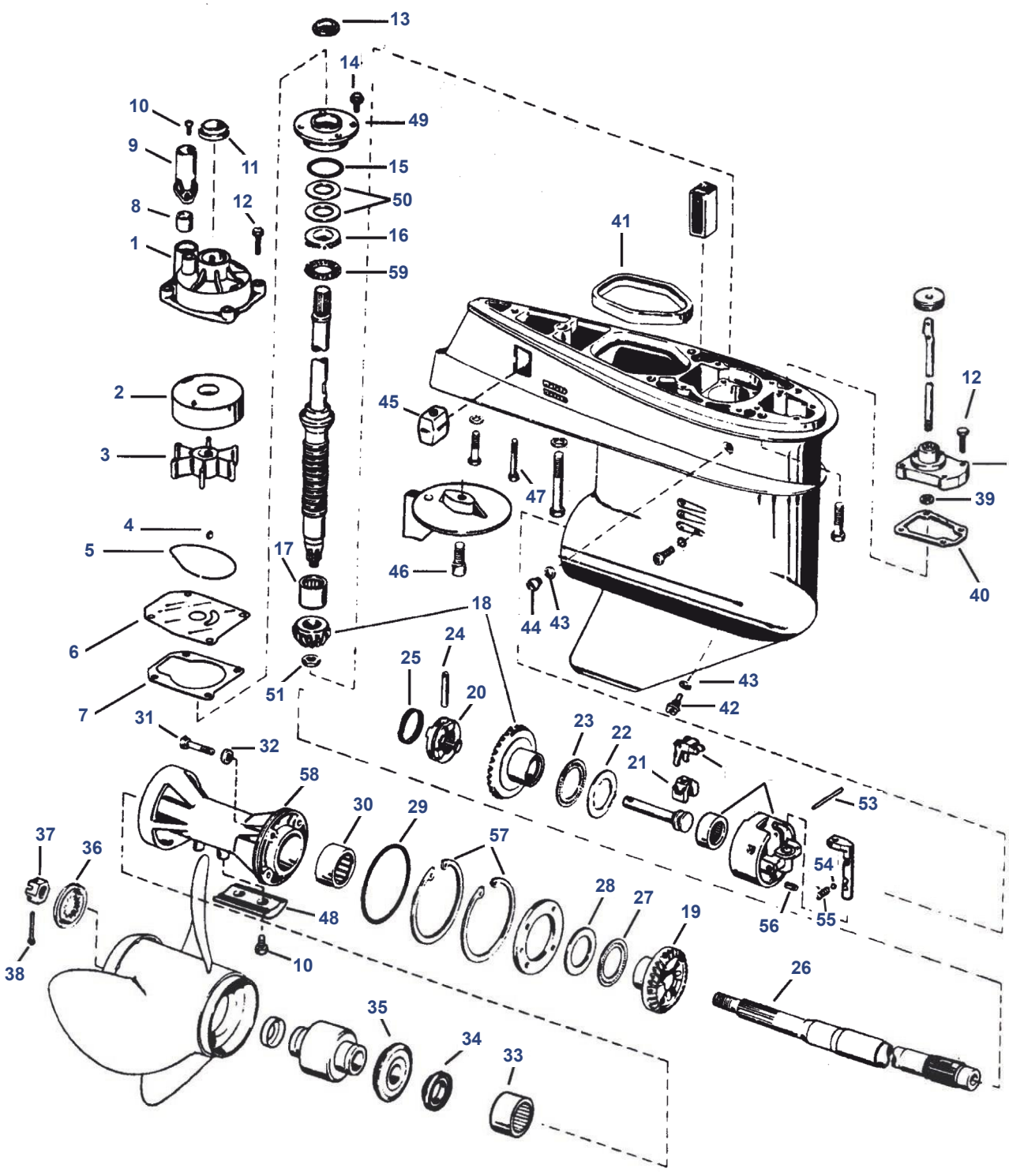

Ref.	R.O.
REC22670	397338 + 318304 + 318303



Kit piñones
Pinion kit
Kit pignoni

Nº	REF	R.O./OEM	Descripción	Description	Descrizione
1	**REC438543**	438543	CUERPO BOMBA	PUMP HOUSING	CORPO POMPA
2	**REC340619**	340619	TAPA BOMBA	PUMP CUP	COPERCHIO POMPA
3	**REC765431**	382547	IMPULSOR (1975-78)	IMPELLER (1975-78)	GIRANTE (1975-78)
3	**REC396725**	396725	IMPULSOR (1979-06)	IMPELLER (1979-06)	GIRANTE (1979-06)
4	**REC308928**	308928	LLAVE (1975-78)	KEY (1975-78)	CHIAVE (1975-78)
4	**REC331901**	331901	LLAVE BLANCA (1979-06)	KEY, WHITE (1979-06)	CHIAVE, BIANCO (1979-06)
4	**REC334897**	334897	LLAVE NEGRA (1979-06)	KEY, BLACK (1979-06)	CHIAVE, NERO (1979-06)
5	**REC319586**	319586	JUNTA (1975-78)	GASKET (1975-78)	GUARNIZIONE (1975-78)
5	**REC324981**	324981	RETÉN (1979-06)	SEAL (1979-06)	TENUTA (1979-06)
6	**REC341038**	341038	TAPA	WEAR PLATE	COPERCHIO
7	**REC336530**	336530	JUNTA	GASKET	GUARNIZIONE
8	**REC314008**	314008	GRUESO	GROMMET	SPESSORE
9	**REC319276**	319276	TUBO GUÍA	TUBE GUIDE	TUBO GUIDA
10	**REC908158**	908158	TORNILLO	SCREW	VITE
11	**REC341732**	341732	GRUESO	GROMMET	SPESSORE
12	**REC302325**	302325	TORNILLO	SCREW	VITE
13	**REC342786**	342786	RETÉN ACEITE	OIL SEAL	PARAOLIO
14	**REC909386**	909386	TORNILLO	SCREW	VITE
15	**REC313754**	313754	ARO	O-RING	O-RING
16	**REC317230**	317230	ARANDELA	THRUST WASHER	RONDELLA
17	**REC382343**	382343	COJINETE	BEARING	CUSCINETTO
18		397338	KIT PIÑONES	GEAR SET	KIT CUSCINETTO
19		318304	MARCHA ATRÁS	REVERSE GEAR	MARCIA INDIETRO
20	**REC318303**	318303	SELECTOR	CLUTCH DOG	SELETTORE
21	**REC334163**	334163	CUNA	CRADLE	ALLOGGIAMENTO
22	**REC324766**	324766	ARANDELA	THRUST WASHER	RONDELLA
23	**REC385043**	385043	ARANDELA COJINETE	THRUST BEARING	RONDELLA CUSCINETTO
24	**REC313448**	313448	PASADOR	CROSS PIN	CHIAVISTELLO
25	**REC324369**	324369	MUELLE	SPRING	MOLLA
26	**REC439185**	439185	EJE HÉLICE	PROP SHAFT	ASSE ELICA
27	**REC382408**	382408	ARANDELA COJINETE	THRUST BEARING	RONDELLA CUSCINETTO
28	**REC313447**	313447	ARANDELA	THRUST WASHER	RONDELLA
29	**REC967344**	313446	ARO	O-RING	O-RING
30	**REC382407**	382407	COJINETE	BEARING	CUSCINETTO
31	**REC320041**	320041	TORNILLO	SCREW	VITE
32	**REC3852045**	332584	ARO	O-RING	O-RING
33	**REC379504**	379504	COJINETE	BEARING	CUSCINETTO
34	**REC330137**	330137	RETÉN ACEITE	OIL SEAL	PARAOLIO
35	**REC127084**	127084	ARANDELA	THRUST WASHER	RONDELLA
36	**REC315810**	315810	ESPACIADOR HÉLICE	PROP SPACER	SPESSORE ELICA
37	**REC314503**	314503	TUERCA HÉLICE	PROP NUT	DADO ELICA
38	**REC314502**	314502	PASADOR	COTTER PIN	CHIAVISTELLO
39	**REC318372**	318372	ARO	O-RING	O-RING
40	**REC314082**	314082	JUNTA	GASKET	GUARNIZIONE
41	**REC324937**	324937	RETÉN	SEAL	TENUTA
42	**REC22-67892A05**	318544	TORNILLO DRENAJE	DRAINING SCREW	VITE DRENAGGIO
43	**REC12-191833**	311598	JUNTA	GASKET	GUARNIZIONE
44	**REC10-79953Q04**	307551	TORNILLO	SCREW	VITE
45	**CM393023**	436745	ANODO	ANODE	ANODO
46	**REC313715**	313715	TORNILLO	SCREW	VITE
47	**REC328096**	328096	TORNILLO	SCREW	VITE
48	**CM431708**	431708	ANODO	ANODE	ANODO
49	**REC385087**	385087	CUERPO COJINETE Y RETÉN	BEARING HOUSING & SEAL	CORPO CUSCINETTO E PARAOLIO
49	**REC435519**	435519	CUERPO COJINETE Y RETÉN	BEARING HOUSING & SEAL	CORPO CUSCINETTO E PARAOLIO
50	**REC323889**	323889	SUPLEMENTO .003	SHIM .003	SUPPLEMENTO .003
50	**REC323890**	323890	SUPLEMENTO .004	SHIM .004	SUPPLEMENTO .004
50	**REC317232**	317232	SUPLEMENTO .005	SHIM .005	SUPPLEMENTO .005
51	**REC313339**	313339	TUERCA PIÑÓN	PINION NUT	DADO PIGNONE
52		391365	CUERPO Y COJINETE	HOUSING & BEARING ASSEMBLY	CORPO E CUSCINETTO
53	**REC320145**	320145	PASADOR	PIN	CHIAVISTELLO
54	**REC327345**	327345	BOLA	DETENT BALL	PALLA
55	**REC911961**	911961	MUELLE	SPRING	MOLLA
56	**REC331880**	331880	PASADOR	PIN	CHIAVISTELLO
57	**REC313445**	313445	ARO RETENEDOR	RETAINING RING	O-RING
58	**REC434391**	434391	COJINETE DIÁBOLO	BEARING CARRIER	CUSCINETTO
59	**REC385068**	385068	ARANDELA COJINETE	THRUST BEARING	RONDELLA CUSCINETTO

V4 60° (1995-06)
REDUCCIÓN / GEAR RATIO / RIDUZIONE
2.00:1 (.50)

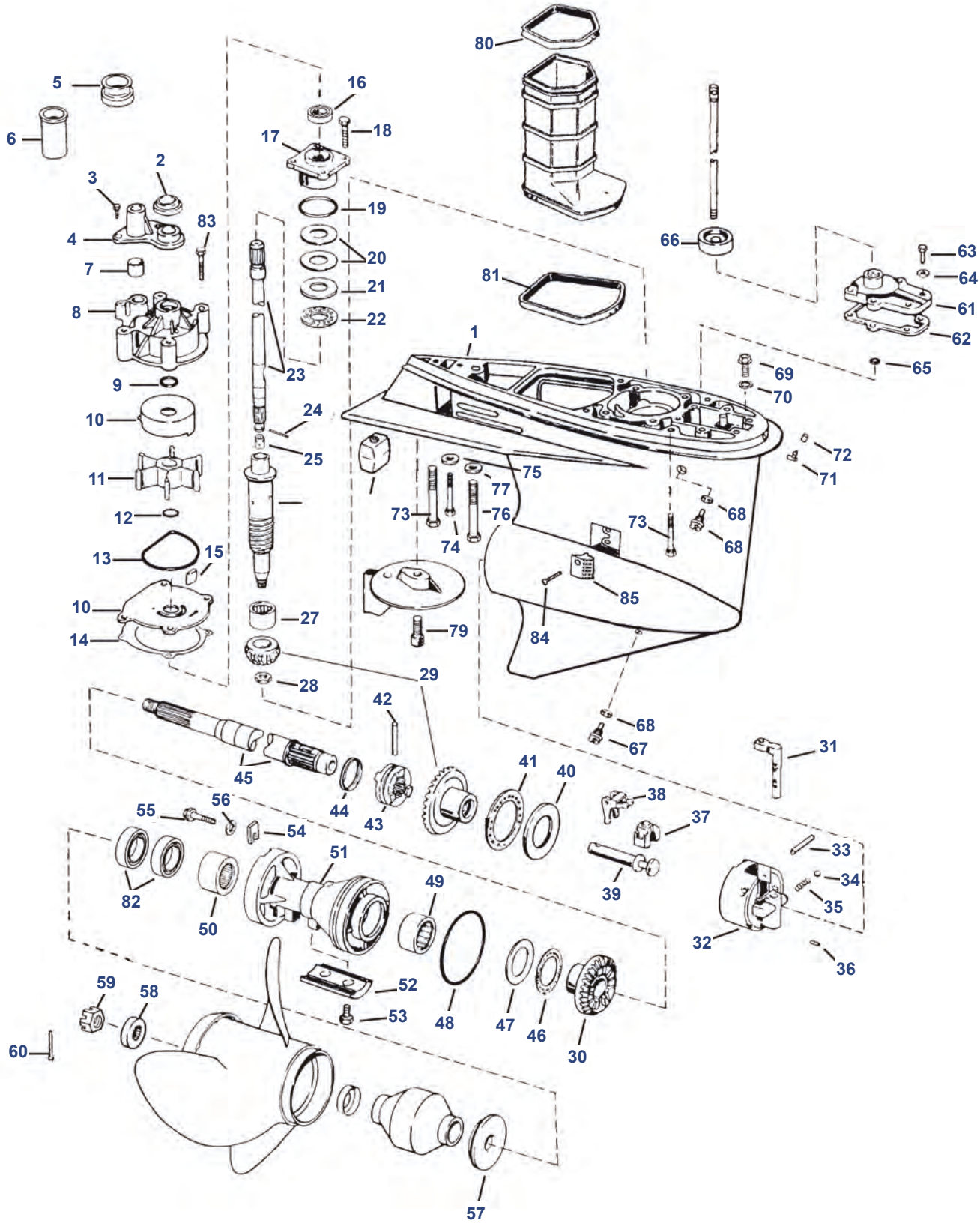

Nº	REF	R.O./OEM	Descripción	Description	Descrizione
1		5004767	CARCASA COLA	GEARCASE ASSEMBLY	PIEDE
2	**REC320943**	320943	GRUESO	GROMMET	SPESSORE
3	**REC306643**	306643	TORNILLO	SCREW	VITE
4	**REC338893**	338893	TUBO GUÍA	TUBE GUIDE	TUBO GUIDA
5	**REC354580**	338601	GRUESO	GROMMET	SPESSORE
6	**REC338636**	338636	TUBO ESPACIADOR CORTO	TUBE SPACER (SHORT)	TUBO DISTANZIATORE CORTO
7	**REC314008**	314008	GRUESO	GROMMET	SPESSORE
8	**REC435990**	435990	CUERPO BOMBA (TRANSOM 20")	PUMP HOUSING (20 TRANSOM)	CORPO POMPA (TRANSOM 20")

Nº	REF	R.O./OEM	Descripción	Description	Descrizione
8	**REC5007968**	435959	CUERPO BOMBA (TRANSOM 25")	PUMP HOUSING (25 TRANSOM)	CORPO POMPA (TRANSOM 25")
9	**REC331188**	331188	ARO	O-RING	O-RING
10	**REC435027**	435027	TAPA Y PLATO	CUP & PLATE ASSEMBLY	COPERCHIO E PIATTO
11	**REC5001593**	435821	IMPULSOR	IMPELLER	GIRANTE
12	**REC302035**	302035	ARO	O-RING	O-RING
13	**REC331353**	331353	RETÉN	SEAL	TENUTA
14	**REC338484**	338484	JUNTA	GASKET	GUARNIZIONE
15	**REC331107**	331107	LLAVE	KEY	CHIAVE
16	**REC341280**	341280	RETÉN ACEITE	OIL SEAL	PARAOLIO
17	**REC439476**	439476	CUERPO COJINETE Y RETÉN	BEARING HOUSING & SEAL	CORPO CUSCINETTO E PARAOLIO
18	**REC317624**	317624	TORNILLO	SCREW	VITE
19	**REC314728**	314728	ARO	O-RING	O-RING
20	**REC323362**	323362	SUPLEMENTO .003	SHIM .003	SPESSORE .003
20	**REC323361**	323361	SUPLEMENTO .004	SHIM .004	SPESSORE .004
20	**REC314745**	314745	SUPLEMENTO .005	SHIM .005	SPESSORE .005
21	**REC327656**	327656	ARANDELA	THRUST WASHER	RONDELLA
22	**REC387656**	387656	ARANDELA COJINETE	THRUST BEARING	RONDELLA CUSCINETTO
23	**REC5000615**	5000615	EJE COLA	DRIVE SHAFT	ASSE PIEDE
24	**REC311538**	311538	PASADOR	PIN	CHIAVISTELLO
25	**REC338504**	338504	RETENEDOR	RETAINER	FERMO
27	**REC384195**	384195	PIÑÓN COJINETE	PINION BEARING	PIGNONE CUSCINETTO
28	**REC11-35921**	314730	TUERCA	NUT	DADO
29		436746	KIT COJINETES MARCHA ADELANTE	P / FORWARD GEAR SET	KIT CUSCINETTO MARCIA AVANTI
30		345992	MARCHA ATRÁS	REVERSE GEAR	MARCIA INDIETRO
31	**REC915954**	915954	RETENEDOR	DETENT	FERMO
32		391365	CUERPO Y COJINETE	HOUSING & BEARING ASSEMBLY	CORPO E CUSCINETTO
33	**REC320145**	320145	PASADOR	PIN	CHIAVISTELLO
34	**REC327345**	327345	BOLA	DETENT BALL	PALLA
35	**REC911961**	911961	MUELLE	SPRING	MOLLA
36	**REC323664**	331880	PASADOR	PIN	CHIAVISTELLO
37	**REC334163**	334163	CUNA	CRADLE	ARTICOLAZIONE
38		324037	ELEVADOR	LEVER	SPESSORE
39	**REC322941**	322941	EJE	SHAFT	ASSE
40	**REC324766**	324766	ARANDELA	THRUST WASHER	RONDELLA
41	**REC385043**	385043	ARANDELA COJINETE	THRUST BEARING	RONDELLA CUSCINETTO
42	**REC313448**	313448	PASADOR	PIN	CHIAVISTELLO
43	**REC323664**	323664	SELECTOR	CLUTCH DOG	SELETTORE
44	**REC324369**	324369	MUELLE	SPRING	MOLLA
45		436834	EJE HÉLICE	PROP SHAFT	ASSE ELICA
46	**REC382408**	382408	ARANDELA COJINETE	THRUST BEARING	RONDELLA CUSCINETTO
47	**REC314731**	314731	ARANDELA	THRUST WASHER	RONDELLA
48	**REC967344**	313446	ARO	O-RING	O-RING
49	**REC382407**	382407	COJINETE	BEARING	CUSCINETTO
50	**REC379504**	379504	COJINETE	BEARING	CUSCINETTO
51		5000440	COJINETE DIÁBOLO	BEARING CARRIER	CUSCINETTO
52	**CM431708**	431708	ÁNODO	ANODE	ANODO
53	**REC908158**	908158	TORNILLO	SCREW	VITE
54	**REC333957**	333957	PESTAÑA SUJECCIÓN	TAB	PIASTRELLA SOGGEZIONE
55	**REC350271**	350271	TORNILLO	SCREW	VITE
56	**REC328743**	328743	ARANDELA	WASHER	RONDELLA
57	**REC127084**	127084	ARANDELA 3 PALAS	THRUST WASHER (3-BLADE)	RONDELLA 3 PALE
58	**REC315810**	315810	ESPACIADOR	SPACER	DISTANZIATORE
59	**REC314503**	314503	TUERCA HÉLICE	PROP NUT	DADO ELICA
60	**REC314502**	314502	PASADOR	COTTER PIN	CHIAVISTELLO
61	**REC5006241**	5006241	TAPA Y RETÉN	COVER & SEAL ASSEMBLY	COPERCHIO E PARAOLIO
62	**REC324670**	324670	JUNTA	GASKET	GUARNIZIONE
63	**REC302325**	302325	TORNILLO	SCREW	VITE
64	**REC328702**	328702	ARANDELA	WASHER	RONDELLA
65	**REC318372**	318372	ARO	O-RING	O-RING
66	**REC321008**	321008	GRUESO	GROMMET	SPESSORE
67	**REC22-67892A05**	318544	TORNILLO DRENAJE	DRAINING SCREW	VITE DRENAGGIO
68	**REC3855081**	311598	JUNTA	GASKET	GUARNZIONE
69	**REC341220**	341220	TORNILLO	SCREW	VITE
70	**REC437330**	437330	ARANDELA CIERRE	SEAL WASHER	RONDELLA CHIUSURA
71		336535	RETENEDOR	NIPPLE	FERMO
72		305749	TAPA	CAP	COPERCHIO
73	**REC331999**	331999	TORNILLO	SCREW	VITE
74	**REC341219**	341219	TORNILLO	SCREW	VITE
75	**REC307161**	307161	CIERRE	LOCKWASHER	CHIUSURA
76		331998	TORNILLO	SCREW	VITE
77	**REC330265**	330265	ARANDELA	WASHER	RONDELLA
78	**CM393023**	436745	ÁNODO	ANODE	ANODO
79	**REC313763**	313715	TORNILLO	SCREW	VITE
80	**REC320936**	320936	RETÉN	SEAL	TENUTA
81	**REC320961**	320961	RETÉN	SEAL	TENUTA
82	**REC330137**	330137	RETÉN ACEITE	OIL SEAL	PARAOLIO
83	**REC302325**	302325	TORNILLO	SCREW	VITE
84	**REC337061**	337061	TORNILLO	SCREW	VITE
85	**REC337778**	337778	REJILLA	SCREEN	VITE

V4 / V6 "O" (1979-06)
REDUCCIÓN / GEAR RATIO / RIDUZIONE
V4 2.25:1 (.44), V6 1.86:1 (.54)

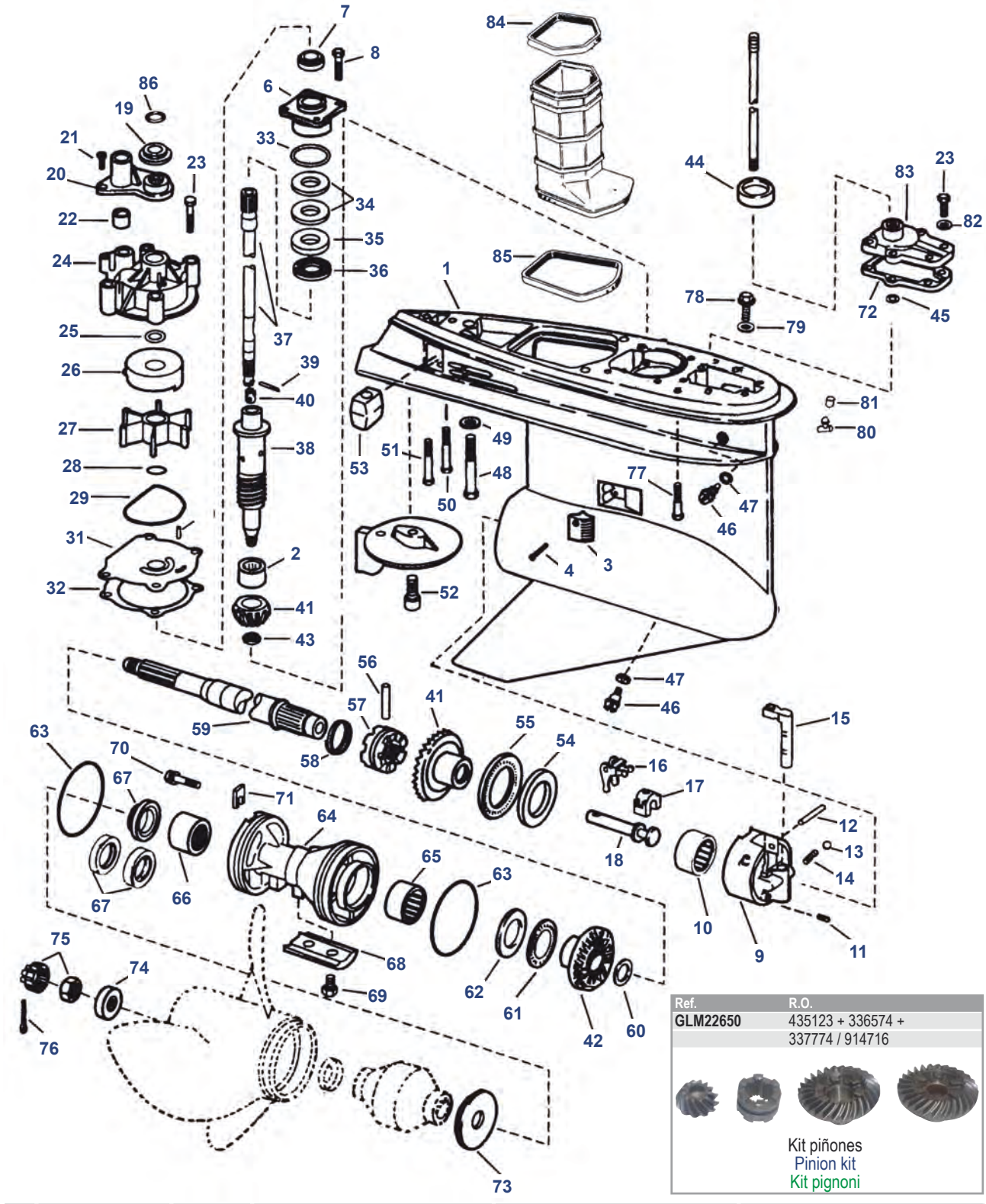

Ref.	R.O.
GLM22650	435123 + 336574 + 337774 / 914716

Kit piñones
Pinion kit
Kit pignoni

Nº	REF	R.O./OEM	Descripción	Description	Descrizione
1	**REC439973**	439973	CARCASA COLA Y TUBO	GEARCASE ASSEMBLY / TUBE	CARCASSA PIEDE E TUBO
1	**REC5007022**	439972	CARCASA COLA	GEARCASE ASSEMBLY	CARCASSA PIEDE
2	**REC387817**	387817	PIÑÓN COJINETE	PINION BEARING	PIGNONE CUSCINETTO
3	**REC337778**	337778	MEMBRANA	SCREEN	MEMBRANA
4	**REC337061**	337061	TORNILLO	SCREW	VITE
5	**REC320961**	320961	RETÉN	SEAL	PARAOLIO
6	**REC439476**	439476	CUERPO COJINETE Y RETÉN	BEARING HOUSING & SEAL	CORPO E CUSCINETTO
7	**REC341280**	341280	RETÉN ACEITE	OIL SEAL	PARAOLIO
8	**REC317624**	317624	TORNILLO	SCREW	VITE
9	**REC389455**	389455	CUERPO Y COJINETE	HOUSING & BEARING ASSEMBLY	CORPO E CUSCINETO
10	**REC389039**	389039	COJINETE	BEARING	RONDELLA
11	**REC331880**	331880	PASADOR	PIN	CHIAVISTELLO
12	**REC328825**	328825	PASADOR	PIN	CHIAVISTELLO

Nº	REF	R.O./OEM	Descripción	Description	Descrizione
13	**REC160084**	160084	BOLA	DETENT BALL	PALLA
14	**REC911962**	911962	MUELLE	SPRING	MOLLA
15	**REC915954**	915954	RETENEDOR	DETENT	FERMO
16	**REC322938**	322938	ELEVADOR	LEVER	LEVA
17	**REC334163**	334163	CUNA	CRADLE	ARTICOLAZIONE
18	**REC322941**	322941	EJE	SHAFT	ASSE
19	**REC320943**	320943	GRUESO	GROMMET	SPESSORE
20	**REC338893**	338893	TUBO GUÍA	TUBE GUIDE	TUBO GUIDA
21	**REC306643**	306643	TORNILLO	SCREW	VITE
22	**REC314008**	314008	GRUESO	GROMMET	SPESSORE
23	**REC302325**	302325	TORNILLO	SCREW	VITE
24	**REC435990**	435990	CUERPO BOMBA TRANSOM 20"	PUMP HOUSING (20 TRANSOM)	CORPO POMPA (TRANSOM 20")
24	**REC5007968**	435959	CUERPO BOMBA TRANSOM 25"	PUMP HOUSING (25 TRANSOM)	CORPO POMPA (TRANSOM 25")
25	**REC331188**	331188	ARO	O-RING	O-RING
26	**REC338486**	338486	TAPA BOMBA	PUMP CUP	COPERCHIO POMPA
27	**REC5001593**	5001593	IMPULSOR	IMPELLER	GIRANTE
28	**REC302035**	302035	ARO	O-RING	O-RING
29	**REC331353**	331353	RETÉN	SEAL	PARAOLIO
30	**REC777129**	331107	LLAVE	KEY	CHIAVE
31	**REC338485**	338485	TAPA	WEAR PLATE	COPERCHIO
32	**REC338484**	338484	JUNTA	GASKET	GUARNIZIONE
33	**REC314728**	314728	ARO	O-RING	O-RING
34	**REC323362**	323362	SUPLEMENTO .003	SHIM .003	SPESSORE .003
34	**REC323361**	323361	SUPLEMENTO .004	SHIM .004	SPESSORE .004
34	**REC314745**	314745	SUPLEMENTO .005	SHIM .005	SPESSORE .005
35	**REC327656**	327656	ARANDELA	THRUST WASHER	RONDELLA
36	**REC387656**	387656	ARANDELA COJINETE	THRUST BEARING	RONDELLA CUSCINETTO
37	**REC5000615**	5000615	EJE LARGO COLA	DRIVE SHAFT (LONG)	ASSE LUNGO PIEDE
38	**REC345905**	345905	EJE INFERIOR COLA	LOWER DRIVE SHAFT	ASSE INFERIORE PIEDE
39	**REC311538**	311538	PASADOR	PIN	CHIAVISTELLO
40	**REC338504**	338504	RETENEDOR	RETAINER	FERMO
41	**REC435123**	435123	KIT PIÑONES MARCHA ADELANTE V4	P / FORWARD GEAR SET V4	KIT PIGNONE MARCIA AVANTI V4
41		5004938	KIT PIÑONES MARCHA ADELANTE V6	P / FORWARD GEAR SET V6	KIT PIGNONE MARCIA AVANTI V6
42		336574	MARCHA ATRÁS V4	REVERSE GEAR V4	MARCIA INDIETRO V4
42	**REC5004218**	910994	MARCHA ATRÁS V6	REVERSE GEAR V6	MARCIA INDIETRO V6
43	**REC11-35921**	314730	TUERCA	NUT	DADO
44	**REC321008**	321008	GRUESO	GROMMET	SPESSORE
45	**REC318372**	318372	ARO	O-RING	O-RING
46	**REC22-67892A05**	318544	TORNILLO DRENAJE	DRAINING SCREW	VITE DRENAGGIO
47	**REC3855081**	311598	JUNTA	GASKET	GUARNIZIONE
48		331998	TORNILLO	SCREW	VITE
49	**REC330265**	330265	ARANDELA	WASHER	RONDELLA
50	**REC328096**	328096	TORNILLO	SCREW	VITE
51		330263	TORNILLO	SCREW	VITE
52	**REC313715**	313715	TORNILLO	SCREW	VITE
53	**CM393023**	436745	ÁNODO	ANODE	ANODO
54	**REC327669**	327669	ARANDELA	THRUST WASHER	RONDELLA
55	**REC389042**	389042	ARANDELA COJINETE	THRUST BEARING	RONDELLA CUSCINETTO
56	**REC313448**	313448	PASADOR	CROSS PIN	CHIAVISTELLO
57	**REC337774**	337774	SELECTOR	CLUTCH DOG	SELETTORE
58	**REC324369**	324369	MUELLE	SPRING	MOLLA
59	**REC395209**	395209	EJE HÉLICE (1-3/16") V6	PROP SHAFT (1-3/16") V6	ASSE ELICA (1-3/16") V6
59	**REC5004765**	5004765	EJE HÉLICE (1-1/4") V4/V6	PROP SHAFT (1-1/4") V4/V6	ASSE ELICA (1-1/4") V4/V6
60	**REC435123**	336565	ARANDELA	THRUST WASHER	RONDELLA
61	**REC382408**	382408	ARANDELA COJINETE	THRUST BEARING	RONDELLA CUSCINETTO
62	**REC314731**	314731	ARANDELA	THRUST WASHER	RONDELLA
63	**REC305123**	305123	ARO	O-RING	O-RING
64	**REC5000074**	5000074	COJINETE DIÁBOLO (1-3/16")	BEARING CARRIER (1-3/16")	CUSCINETTO (1-3/16")
64	**REC5004257**	5004257	COJINETE DIÁBOLO (1-1/4")	BEARING CARRIER (1-1/4")	CUSCINETTO (1-1/4")
65	**REC382407**	382407	COJINETE	BEARING	CUSCINETTO
66	**REC387247**	387247	COJINETE (Ø INT. 1-3/16")	BEARING (INSIDE Ø 1-3/16")	CUSCINETTO (Ø INT. 1-3/16")
66	**REC434467**	434467	COJINETE (Ø INT. 1-1/4")	BEARING (INSIDE Ø 1-1/4")	CUSCINETTO (Ø INT. 1-1/4")
67	**REC341281**	341281	RETÉN ACEITE (1-1/4") 1 PIEZA	OIL SEAL (1-1/4") 1 PC.	PARAOLIO (1-1/4") 1 PECE
67	**REC334950**	334950	RETÉN ACEITE (1-1/4") 2 PIEZAS	OIL SEAL (1-1/4") 2 PCS.	PARAOLIO (1-1/4") 2 PECI
67	**REC26-76868**	320862	RETÉN ACEITE (1-3/16") 2 PIEZAS	OIL SEAL (1-3/16") 2 PCS.	PARAOLIO (1-3/16") 2 PECI
68	**CM431708**	431708	ÁNODO	ANODE	ANODO
69	**REC908158**	908158	TORNILLO	SCREW	VITE
70	**REC350271**	350271	TORNILLO	SCREW	VITE
71	**REC333957**	333957	LENGÜETA	TAB	LINGUETTA
72	**REC324670**	324670	JUNTA	GASKET	GUARNIZIONE
73	**REC126870**	126870	ARANDELA	THRUST WASHER	RONDELLA
74	**REC320570**	320570	ESPACIADOR	SPACER	DISTANZIATORE
75	**REC398042**	398042	KIT TUERCA HÉLICE	NUT & KEEPER	KIT DADO ELICA
76	**REC3852056**	306394	PASADOR	COTTER PIN	CHIAVISTELLO
77	**REC331999**	331999	TORNILLO	SCREW	VITE
78	**REC341220**	341220	TORNILLO	SCREW	VITE
79	**REC437330**	437330	ARANDELA	SEAL WASHER	RONDELLA
80		336535	RETENEDOR	NIPPLE	FERMO
81		305749	TAPA	CAP	COPERCHIO
82	**REC328702**	328702	ARANDELA	WASHER	RONDELLA
83	**REC5006241**	5006241	TAPA CON RETÉN	COVER & SEAL ASSEMBLY	COPERCHIO E TENUTA
84	**REC320936**	320936	RETÉN	SEAL	PARAOLIO
85	**REC320961**	320961	RETÉN	SEAL	PARAOLIO

V4 / V6 "M" (1902-06)
REDUCCIÓN / GEAR RATIO / RIDUZIONE
V4 2.25:1 (.44), V6 1.86:1 (.54)

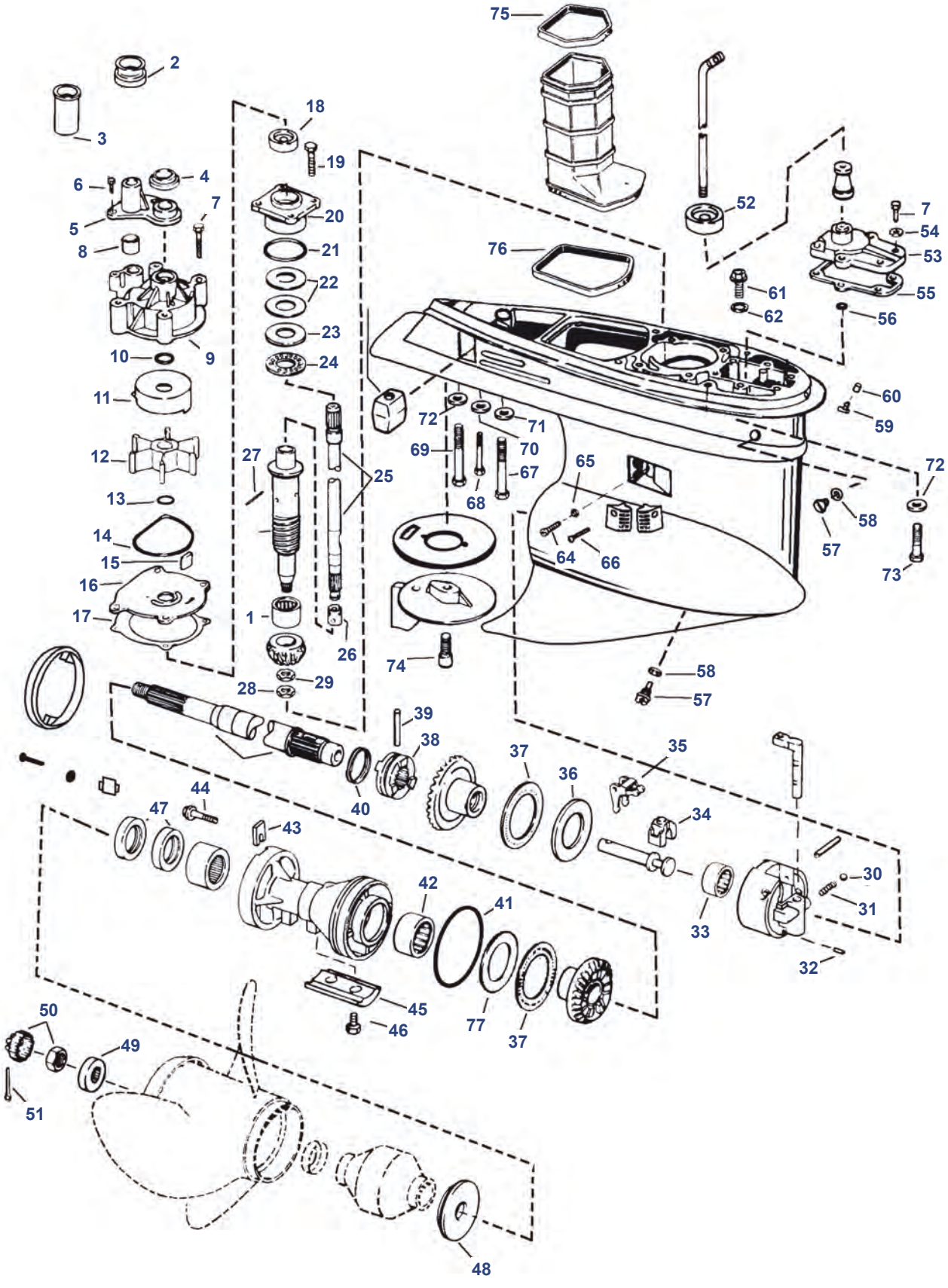

Nº	REF	R.O./OEM	Descripción	Description	Descrizione
1	**REC387817**	387817	COJINETE PIÑÓN	PINION BEARING	CUSCINETTO PIGNONE
2	**REC354580**	338601	GRUESO	GROMMET	SPESSORE
3	**REC338636**	338636	TUBO ESPACIADOR	TUBE SPACER	TUBO DISTANZIATORE
4	**REC320943**	320943	GRUESO	GROMMET	SPESSORE
5	**REC338893**	338893	TUBO GUÍA	TUBE GUIDE	TUBO GUIDA
6	**REC306643**	306643	TORNILLO	SCREW	VITE
7	**REC302325**	302325	TORNILLO	SCREW	VITE
8	**REC314008**	314008	GRUESO	GROMMET	SPESSORE
9	**REC435990**	435959	CUERPO BOMBA	PUMP HOUSING	CORPO POMPA
10	**REC331188**	331188	ARO	O-RING	O-RING
11	**REC338486**	338486	TAPA BOMBA	PUMP CUP	COPERCHIO POMPA
12	**REC5001593**	5001593	IMPULSOR	IMPELLER	GIRANTE
13	**REC302035**	302035	ARO	O-RING	O-RING
14	**REC331353**	331353	RETÉN	SEAL	TENUTA
15	**REC331107**	331107	LLAVE	KEY	CHIAVE
16	**REC338485**	338485	TAPA BOMBA	WEAR PLATE	COPERCHIO POMPA
17	**REC338484**	338484	JUNTA	GASKET	GUARNIZIONE
18	**REC341280**	341280	RETÉN ACEITE	OIL SEAL	PARAOLIO
19	**REC317624**	317624	TORNILLO	SCREW	VITE
20	**REC439476**	439476	CUERPO COJINETE Y RETÉN	BEARING HOUSING & SEAL	CORPO CUSCINETTO E PARAOLIO
21	**REC314728**	314728	ARO	O-RING	O-RING
22	**REC323362**	323362	SUPLEMENTO .003	SHIM .003	SPESSORE .003
22	**REC323361**	323361	SUPLEMENTO .004	SHIM .004	SPESSORE .004
22	**REC314745**	314745	SUPLEMENTO .005	SHIM .005	SPESSORE .005
23	**REC327656**	327656	ARANDELA	THRUST WASHER	RONDELLA
24	**REC387656**	387656	ARANDELA COJINETE	THRUST BEARING	RONDELA CUSCINETTO
25	**REC5000614**	5000614	EJE LARGO COLA 20"	DRIVE SHAFT 20" L	ASSE LUNGO PIEDE 20"
25	**REC5007672**	5000623	EJE LARGO COLA 25"	DRIVE SHAFT 25" L	ASSE LUNGO PIEDE 25"
25	**REC5000624**	5000624	EJE LARGO COLA 25"	DRIVE SHAFT 25" L	ASSE LUNGO PIEDE 25"
26	**REC338504**	338504	RETENEDOR	RETAINER	FERMO
27	**REC311538**	311538	PASADOR	PIN	CHIAVISTELLO
28	**REC11-35921**	314730	TUERCA	NUT	DADO
29	**REC350038**	350038	ARANDELA	WASHER	RONDELLA
30	**REC160084**	160084	BOLA	DETENT BALL	PALLA
31	**REC911962**	911962	MUELLE	SPRING	MOLLA
32	**REC331880**	331880	PASADOR	PIN	CHIAVISTELLO
33	**REC389039**	389039	COJINETE	BEARING	CUSCINETTO
34	**REC334163**	334163	CUNA	CRADLE	ARTICOLAZIONE
35	**REC322938**	322938	ELEVADOR	LEVER	LEVA
36	**REC327669**	327669	ARANDELA	THRUST WASHER	RONDELLA
37	**REC389042**	389042	ARANDELA COJINETE	THRUST BEARING	RONDELLA CUSCINETTO
38	**REC337774**	337774	SELECTOR	CLUTCH DOG	SELETTORE
39	**REC313448**	313448	PASADOR	CROSS PIN	CHIAVISTELLO
40	**REC324369**	324369	MUELLE	SPRING	MOLLA
41	**REC326849**	326849	ARO	O-RING	O-RING
42	**REC382407**	382407	COJINETE	BEARING	CUSCINETTO
43	**REC333957**	333957	LENGÜETA	TAB	LINGUETTA
44	**REC350271**	350271	TORNILLO	SCREW	VITE
45	**CM431708**	431708	ÁNODO	ANODE	ANODO
46	**REC908158**	908158	TORNILLO	SCREW	VITE
47	**REC341281**	341281	RETÉN ACEITE 1 PIEZA	OIL SEAL - 1 PC.	PARAOLIO 1 PEZZO
47	**REC334950**	334950	RETÉN ACEITE 2 PIEZAS	OIL SEAL - 2 PCS.	PARAOLIO 2 PEZZI
48	**REC126870**	126870	ARANDELA	THRUST WASHER	RONDELLA
49	**REC320570**	320570	ESPACIADOR	SPACER	DISTANZIALE
50	**REC398042**	398042	KIT TUERCA HÉLICE	NUT & KEEPER	DADO ELICA
51	**REC3852056**	306394	PASADOR	COTTER PIN	CHIAVISTELLO
52	**REC321008**	321008	GRUESO	GROMMET	SPESSORE
53	**REC5006241**	5006241	TAPA Y RETÉN	COVER & SEAL ASSEMBLY	COPERCHIO E PARAOLIO
54	**REC328702**	328702	ARANDELA	WASHER	RONDELLA
55	**REC324670**	352165	JUNTA	GASKET	GUARNIZIONE
56	**REC318372**	318372	ARO	O-RING	O-RING
57	**REC22-67892A05**	318544	TORNILLO DRENAJE	DRAINING SCREW	VITE DRENAGGIO
58	**REC3855081**	311598	JUNTA	GASKET	GUARNIZIONE
59		336535	RETENEDOR	NIPPLE	FERMO
60		305749	TAPA	CAP	COPERCHIO
61	**REC341220**	341220	TORNILLO	SCREW	VITE
62	**REC437330**	437330	ARANDELA	SEAL WASHER	RONDELLA
63	**CM393023**	436745	ÁNODO	ANODE	ANODO
64	**REC324852**	324852	TORNILLO	SCREW	VITE
65	**REC332584**	332584	RETÉN	SEAL	TENUTA
66	**REC337061**	337061	TORNILLO	SCREW	VITE
67		331998	TORNILLO	SCREW	VITE
68	**REC341219**	341219	TORNILLO	SCREW	VITE
69		330263	TORNILLO	SCREW	VITE
70	**REC307161**	307161	CIERRE	LOCKWASHER	CHIUSURA
71	**REC330265**	330265	ARANDELA	WASHER	RONDELLA
72		330266	CIERRE	LOCKWASHER	CHIUSURA
73	**REC331999**	331999	TORNILLO	SCREW	VITE
74	**REC313715**	313715	TORNILLO	SCREW	VITE
75	**REC320936**	320936	RETÉN	SEAL	PARAOLIO
76		320961	RETÉN	SEAL	PARAOLIO
77	**REC349193**	349193	ARANDELA	THRUST WASHER	RONDELLA
78	**REC356900**	347371	EJE INFERIOR COLA	LOWER DRIVE SHAFT	ASSE INFERIORE PIEDE
79	**REC5004765**	5004765	EJE HÉLICE	PROP SHAFT	ASSE ELICA

V6 (1976-78)
CAMBIO HIDRÁULICO / HYDRAULIC SHIFT / CAMBIO IDRAULICO

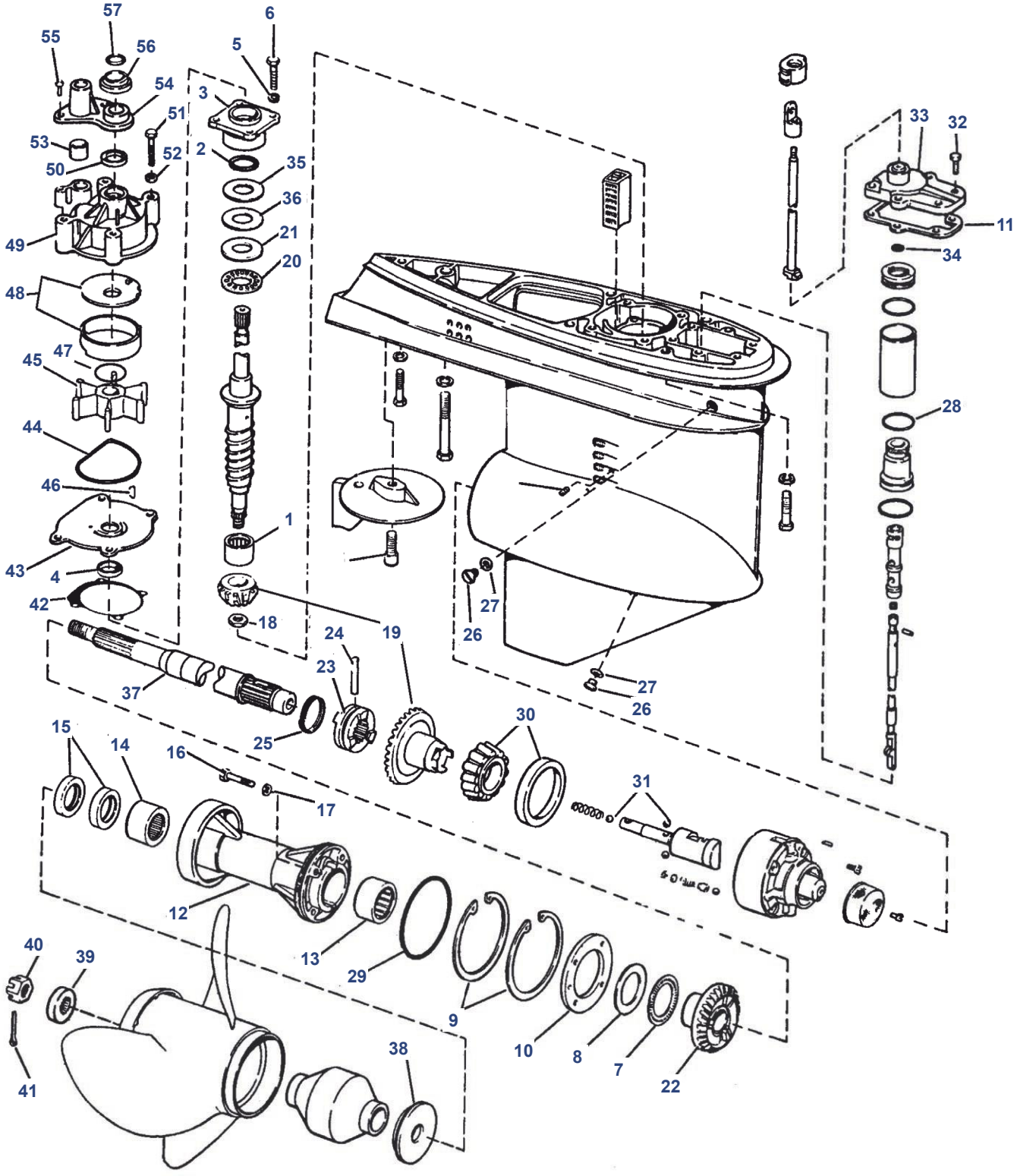

Nº	REF	R.O./OEM	Descripción	Description	<Descrizione
1	**REC387817**	387817	COJINETE PIÑÓN	PINION BEARING	CUSCINETTO PIGNONE
2	**REC314728**	314728	ARO COJINETE EJE COLA	O-RING DRIVE SHAFT BEARING	O-RING CUSCINETTO ASSE PIEDE
3	**REC439476**	439476	CUERPO COJINETE Y RETÉN	BEARING HOUSING & SEAL	CORPO CUSCINETTO E PARAOLIO
4	**REC26-69188**	321453	RETÉN ACEITE EJE COLA	OIL SEAL, DRIVE SHAFT	PARAOLIO, ASSE PIEDE
5		301250	ARANDELA CUERPO COJINETE	WASHER, BEARING HOUSING	RONDELLA, CORPO CUSCINETTO
6		316534	TORNILLO CUERPO COJINETE	SCREW, BEARING HOUSING	VITE CORPO CUSCENTTO
7	**REC382408**	382408	TOPE COJINETE	REVERSE THRUST BEARING	PUNTA CUSCINETTO
8	**REC314731**	314731	TOPE COJINETE	REVERSE THRUST WASHER	PUNTA CUSCINETTO
9		321171	ARO RETENEDOR	RETAINING RING	O-RING FERMO
10		321174	TAPA RETENEDORA	RETAINER PLATE	FERMO COPERCHIO
11		321162	JUNTA TAPA CAMBIO	GASKET, SHIFT COVER	GUARNIZIONE, COPERCHIO CAMBIO
12		387374	COJINETE DIÁBOLO EJE HÉLICE	BEARING CARRIER, PROP SHAFT	CUSCINETTO ASSE ELICA
13		382407	COJINETE MARCHA ATRÁS	REVERSE GEAR BEARING	CUSCINETTO MARCIA INDIETRA
14	**REC387247**	387247	AGUJA COJINETE EJE HÉLICE	NEEDLE BEARING, PROP SHAFT	AGHI CUSCINETTO ASSE ELICA
15	**REC26-76868**	320862	RETÉN EJE HÉLICE	PROP SHAFT SEAL	PARAOLIO ASSE ELICA
16	**REC316563**	316563	TORNILLO	CARRIER RETAINER SCREW	VITE
17		317178	ARO	O-RING CARRIER SCREW	O-RING
18	**REC11-35921**	314730	TUERCA PIÑÓN	PINION NUT	DADO PIGNONE
19	**REC320635**	320635	PIÑÓN Y MARCHA ADELANTE	PINION & FORWARD GEAR	PIGNONE E MARCIA IN AVANTI
20	**REC387656**	387656	TOPE COJINETE	PINION, THRUST BEARING	PUNTA CUSCINETTO
21	**REC327656**	327656	TOPE ARANDELA	PINION, THRUST WASHER	PUNTA RONDELLA
23	**REC337774**	320630	SELECTOR	CLUTCH DOG	SELETTORE
24	**REC313448**	313448	PASADOR SELECTOR	PIN, CLUTCH DOG	CHIAVISTELLO SELETTORE
25	**REC324369**	324369	MUELLE SELECTOR	SPRING, CLUTCH DOG	MOLLA SELETTORE
26	**REC10-79953Q04**	307551	TAPÓN DRENAJE	DRAIN PLUG	TAPPO DRENAGGIO
27		311598	ARANDELA NYLON TAPÓN DRENAJE	DRAIN PLUG NYLON WASHER	RONDELLA NYLON TAPPO DRENAGGIO
28	**REC320140**	320140	ARO CAMBIO	O-RING, SHIFT	O-RING CAMBIO
29	**REC305123**	305123	ARO TÓRICO	O-RING PROP SHAFT CARRIER	O-RING
30		386319	COJINETE MARCHA ADELANTE	FORWARD GEAR BEARING ASSEMBLY	CUSCINETTO MARCIA AVANTI
31	**REC316506**	316506	BOLA RETENEDORA	DETENT BALL	PALLA
32		318139	TORNILLO TAPA	COVER SCREW	VITE COPERCHIO
33		387384	TAPA Y RETÉN	COVER & SEAL ASSEMBLY	COPERCHIO E PARAOLIO
34	**REC318372**	318372	ARO	O-RING, SHIFT ROD	O-RING
35		314742	SUPLEMENTO .002	SHIM .002	SPESSORE .002
36	**REC314745**	314745	SUPLEMENTO .005	SHIM .005	SPESSORE .005
38		333592	TOPE HÉLICE	PROP THRUST BUSHING	PUNTA ELICA
39	**REC320570**	320570	TOPE HÉLICE	PROP NUT SPACER	PUNTA ELICA
40	**REC5008966**	320569	TUERCA HÉLICE	PROP NUT	DADO ELICA
41	**REC309955**	309955	PASADOR TUERCA HÉLICE	PROP NUT COTTER PIN	CHIAVISTELLO DADO ELICA
42	**REC338484**	338484	JUNTA TAPA	GASKET, PLATE	GUARNIZIONE COPERCHIO
43	**REC338485**	321188	TAPA IMPULSOR	PLATE, IMPELLER	COPERCHIO GIRANTE
44	**REC331353**	331353	RETÉN DE TAPA A CUERPO	SEAL, PLATE TO HOUSING	PARAOLIO DEL COPERCHIO E CORPO
45	**REC777212**	385528	IMPULSOR BOMBA AGUA	IMPELLER, W.P.	GIRANTE POMPA ACQUA
46	**REC308928**	308928	LLAVE IMPULSOR	IMPELLER KEY	CHIAVE GIRANTE
47	**REC331188**	321175	ARO IMPULSOR	O-RING IMPELLER	O-RING GIRANTE
48	**REC338486**	338486	ACOPLE INOX	CUP	ACCOPPIAMENTO INOX
49	**REC5007968**	435959	CUERPO	HOUSING	CORPO
50	**REC26-69188**	321453	RETÉN	SEAL	TENUTA
51	**REC302325**	302873	TORNILLO BOMBA AGUA	SCREW, WATER PUMP	VITE, POMPA ACQUA
52	**REC21-20553**	305981	ARANDELA TORNILLO	WASHER, SCREW	RONDELLA, VITE
53	**REC314008**	314008	GRUESO TUBO AGUA	WATER TUBE GROMMET	SPESSORE TUBO ACQUA
54	**REC338893**	338893	TAPA TUBO AGUA	WATER TUBE COVER	COPERCHIO TUBO ACQUA
55	**REC306643**	306643	TORNILLOS TAPA TUBO AGUA	WATER TUBE COVER SCREWS	VITI COPERCHIO TUBO ACQUA
56	**REC320943**	320943	GRUESOS TAPA TUBO AGUA	WATER TUBE COVER GROMMET	SPESSORE COPERCHIO TUBO ACQUA
57	**REC25-30613**	310585	ARO	O-RING	O-RING
58	**REC313715**	313715	TORNILLO	SCREW, TRIM TAB	VITE

KITS PIÑONES COMPLETO
COMPLETE GEAR SETS
KIT PIGNONI COMPLETO

Ref.	R.O.
REC5004218	5004218



Ref.	R.O.
REC986979	22631 + 22632 + 22633



Ref.	R.O.
REC22670	397338 + 318304 + 318303



Ref.	R.O.
REC22660	397627 + 345992 + 332491



KITS PIÑONES AVANTE
PINIONS & FORWARD GEAR SET
KIT PIGNONI MARCIA AVANTI

Ref.	R.O.
REC435123	435123

Reducción 12:27
Ratio 12:27
Riduzione 12:27



Ref.	R.O.
REC57510-93910	5033191

MOTORES / MOTORI / MOTORI
J10 / J15
(2002-04)
(4 Tiempos / 4 Strokes / 4 Tempi)



Ref.	R.O.
REC57510-89J00	5032698

MOTORES / MOTORI / MOTORI
E25 / J25 / BJ25
E30 / J30
(2001-07)
(4 Tiempos / 4 Strokes / 4 Tempi)



PIÑONES MARCHA ATRÁS
REVERSE GEAR
PIGNONI RETROMARCIA

Ref.	R.O.
REC57521-96312	5032100

MOTORES / MOTORI / MOTORI
E25 / J25 / BJ25
E30 / J30
(2000-07)
(4 Tiempos / 4 Strokes / 4 Tempi)



Ref.	R.O.
REC57521-93910	5033192

MOTORES / MOTORI / MOTORI
J10 / J15
(2002-04)
(4 Tiempos / 4 Strokes / 4 Tempi)



PIÑONES DE ATAQUE
GEAR
PIGNONE

Ref.	R.O.
REC57311-93910	5033190

MOTORES / MOTORI / MOTORI
J10 / J15 (2002-04)
(4 Tiempos / 4 Strokes / 4 Tempi)



Ref.	R.O.
REC57311-96311	5032098

MOTORES / MOTORI / MOTORI
E25 / J25 / BJ25
E30 / J30
(2000-07)
(4 Tiempos / 4 Strokes / 4 Tempi)



SELECTORES
CLUTCH DOGS
SELETTORI

Ref.	R.O.
REC323664	323664
REC318303	318303
REC337774	337774, 914716
REC332491	332491



REC323664

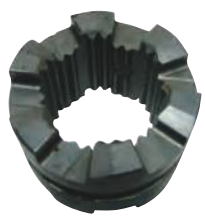

REC337774



REC318303



REC332491

Ref.	R.O.
REC57621-94403	5036059

MOTORES / MOTORI / MOTORI
J40 / BJ40
J50 / BJ50
(2005-06)
(4 Tiempos / 4 Strokes / 4 Tempi)



GRUESO PIÑÓN ATAQUE
SHIM GEAR
SPESSORE PIGNONE

Ref.	R.O.	
REC09160-20041	5032985	T:1.0

MOTORES / MOTORI / MOTORI
J10 / J15
(2002-07)
(4 Tiempos / 4 Strokes / 4 Tempi)



Ref.	R.O.	
REC09160-20042	5032967	T:1.1
REC09160-20043	5032968	T:1.2
REC09160-20044	5032969	T:0.7

MOTORES / MOTORI / MOTORI
J10 / J15
(2002-07)
(4 Tiempos / 4 Strokes / 4 Tempi)



ARANDELA PIÑÓN ATAQUE
WASHER GEAR
RONDELLA PIGNONE

Ref.	R.O.
REC09160-26015	5031232

MOTORES / MOTORI / MOTORI
E40 / J40 / BJ40
E50/ J50 / BJ50
(1999-06)
(4 Tiempos / 4 Strokes / 4 Tempi)



26.2 x 42 x 4.0 mm

Ref.	R.O.
REC09160-21009	5032970

MOTORES / MOTORI / MOTORI
J10, J15
(2002-07)
(4 Tiempos / 4 Strokes / 4 Tempi)



21 x 35 x 2.75 mm

Ref.	R.O.
REC09160-20027	5032966

MOTORES / MOTORI / MOTORI
J10, J15
(2002-07)
(4 Tiempos / 4 Strokes / 4 Tempi)



GUÍA SELECTORES
CLUTCH DOGS APPLICATION
GUIDA SELETTORI

MODELO MODEL MODELLO	AÑO YEAR ANNO	KIT COMPLETO CON SELECTOR COMPLETE GEAR SET WITH CLUTCH KIT COMPLETO CON SELETTORE	KIT PIÑONES FORWARD & PINION KIT PIGNONI	PIÑONES MARCHA ATRÁS REVERSE GEAR PIGNONI RETROMARCIA	SELECTOR CLUTCH DOG SELETTORE
2 & 3 cyl Loopcharged					
25D	1989-05	REC22660			REC332491
35 (AR, AE & AT)	1987		REC433570	REC433570	REC319895
40	1975-88		REC433570	REC433570	REC319895
40	1989-05	REC22660			REC332491
48	1987-88		REC433570	REC433570	REC319895
18	1989-96	REC22660			REC332491
50	1979-88		REC433570	REC433570	REC319895
50	1989-05	REC22660			REC332491
50 (S CYD)	1995-97	REC22670			REC318303
55 Elect	1979-81		REC433570	REC433570	REC319895
60 Elec	1980-88		REC433570		REC319895
60 (3-Cyl. 20)	1986-97	REC22670			REC318303
65 Comm.	1984-97	REC22670			REC318303
70 E	1975	REC22670			REC318303
70 20	1976-97	REC22670			REC318303
75 20	1975-88	REC22670			REC318303
V 4					
85	1977				REC323664
85	1978-80, 1991-95	REC986979			REC323664
88	1987-96	REC986979			REC323664
90	1981-97	REC986979			REC323664
90 V4 60° 2.25:1 "O"	1995-99	GLM22650	REC435123		REC337774
100	1979-80	REC986979			REC323664
100	1989-90	REC986979			REC323664
100 2.25:1 "O"	1991	GLM22650	REC435123		REC337774
100 Comm. (S)	1989-90	REC986979			REC323664
100 Comm. 2.25:1 "O"	1987, 92, 93	GLM22650	REC435123		REC337774
100 Comm. D 2.25:1 "O"	1994-99	GLM22650	REC435123		
100 Comm. (E J) 2.25:1 "O"	1989	GLM22650	REC435123		REC337774
100 Comm. "O"	1990	GLM22650	REC435123		REC337774
110	1986-89	REC986979			REC323664
112	1994-96	REC986979			REC323664
115	1977	REC986979			REC323664
115	1990-97	REC986979			REC323664
115 V4 60° 2.25:1 "O"	1995-99	GLM22650	REC435123		REC337774
120	1986-92	REC986979			REC323664
120 2.25:1 "O"	1990	GLM22650	REC435123		REC337774
120 TL, TX	1993	REC986979			REC323664
120 TX 2.25:1 "O"	1993	GLM22650	REC435123		REC337774

MODELO MODEL MODELLO	AÑO YEAR ANNO	KIT COMPLETO CON SELECTOR COMPLETE GEAR SET WITH CLUTCH KIT COMPLETO CON SELETTORE	KIT PIÑONES FORWARD & PINION KIT PIGNONI	PIÑONES MARCHA ATRÁS REVERSE GEAR PIGNONI RETROMARCIA	SELECTOR CLUTCH DOG SELETTORE
125 Comm. (ESX)	1989-90	**REC986979**			**REC323664**
125 Comm. 2.25:1 "O"	1989-92	**GLM22650**	**REC435123**		**REC337774**
125 Comm. E, R 2.25:1 "O"	1993-96	**GLM22650**	**REC435123**		**REC337774**
125 ESX (F) 2.25:1 "O"	1993	**GLM22650**	**REC435123**		**REC337774**
125 ESX (S)	1993	**REC986979**			**REC323664**
130 2.25:1 "O"	1997	**GLM22650**	**REC435123**		**REC337774**
140	1978-84	**REC986979**			**REC323664**
140	1986-87	**REC986979**			**REC323664**
140 TL	1988-94	**REC986979**			**REC323664**
140 TX 2.25:1 "O"	1988-90, 92, 93	**GLM22650**	**REC435123**		**REC337774**
V 6					
150	1978		**REC320635**		**REC337774**
150	1979-87	**REC5004218**			**REC337774**
150	1988-90	**REC5004218**			**REC337774**
150	1991-97	**REC5004218**			**REC337774**
150 Comm.	1993-95	**REC5004218**			**REC337774**
150 Comm.	1989-90	**REC5004218**			**REC337774**
155 Comm. WTA	1989	**GLM22650**	**REC435123**		**REC337774**
155 Comm. WTP	1989	**REC5004218**	**REC323664**		**REC337774**
175	1977-78		**REC320635**		**REC337774**
175	1979-87	**REC5004218**			**REC337774**
175	1988-90	**REC5004218**	**REC323664**		**REC337774**
175	1991-97	**REC5004218**			**REC337774**
185	1984-85	**REC5004218**			**REC337774**
185	1990	**REC5004218**			**REC337774**
185	1991-94	**REC5004218**			**REC337774**
200	1976-78		**REC320635**		**REC337774**
200	1979-83	**REC5004218**			**REC337774**
200	1986-87	**REC5004218**	**REC323664**		**REC337774**
200	1988-90	**REC5004218**			**REC337774**
200	1991-06	**REC5004218**			**REC337774**
200 Comm.	1990-91	**REC5004218**			**REC337774**
225	1986-87	**REC5004218**			**REC337774**
225	1988-90	**REC5004218**			**REC337774**
225	1991-06	**REC5004218**			**REC337774**
235	1978		**REC320635**		**REC337774**
235	1979-85	**REC5004218**			**REC337774**
1.6L Comm.	1988	**GLM22650**	**REC435123**		**REC337774**

EJES TRANSMISÓN INFERIOR
LOWER DRIVE SHAFT
ASSE TRAMISSIONE INFERIORE

REF	RO. OEM	TIPO COLA GEARCASE TYPE TIPO PIEDE	LONGITUD LENGTH LUNGHEZZA	Ø FIJACIÓN COJINETE PINION BEARING JOURNAL Ø SEDE CUSCINETTO	ESTRIAS SPLINES DENTI
REC346006	346006	V4 90°	8 - 3/4"	1 - 1/8"	6
REC345905	345905	"O"	9 - 1/2"	1 - 1/8"	19
REC356900	347371	"M"	9 - 1/2"	1 - 1/8"	20
REC335679	335679	V8	10"	1 - 9/32"	19



GUÍA V4/V6 EJES TRANSMISÓN INFERIOR
V4/V6 LOWER SHAFT APPLICATIONS
GUIDA V4/V6 ASSE TRAMISSIONE INFERIORE

MODELO MODEL MODELLO	AÑO YEAR ANNO	TIPO COLA GEARCASE TYPE TIPO PIEDE	EJE TRANSMISIÓN DRIVE SHAFT ASSE TRASMISSIONE	R.O. OEM
V4 All Crossflow	1978-97	Small V4 90°	**REC346006**	346006
V4 All Crossflow	1984-97	"O"	**REC345905**	345905
V4 90° Loopcharged	1985-98	"O"	**REC345905**	345905
V4 60°	1995-06	"O"	**REC345905**	345905
V6 90°	1978-06	"O"	**REC345905**	345905
V6 60°	1991-06	"O"	**REC345905**	345905
V6	2002-06	"M"	**REC356900**	347371

EJES TRANSMISÓN SUPERIOR
UPPER DRIVE SHAFT
ASSE TRAMISISIONE SUPERIORE

REF	RO. OEM	LONGITUD LENGTH LUNGHEZZA
REC5000618	5000618	25 - 1/4"
REC5000626	5000626	30 - 1/4"
REC5000614	5000614	25 - 11/16"
REC5007672	5000623	30 - 11/16"
REC5000615	5000615	24 - 3/4"
REC5000624	5000624	29 - 3/4"



GUÍA V4/V6 EJES TRANSMISÓN SUPERIOR
V4/V6 UPPER SHAFT APPLICATIONS
GUIDA V4/V6 ASSE TRAMISSIONE SUPERIORE

MODELO MODEL MODELLO	AÑO YEAR ANNO	REF	R.O. OEM	LONGITUD LENGTH LUNGHEZZA	TRANSOM
J10	2002-07	**REC57100-93902**	5033188	20"	
J15	2002-07	**REC57100-93902**	5033188	20"	
V4 All	1978-91	**REC5000618**	5000618	25 - 1/4"	20" Standard
V4 All	1978-91	**REC5000626**	5000626	30 - 1/4"	25" Standard
V4 90°	1992-98	**REC5000614**	5000614	25 - 11/16"	20" Standard
V4 90°	1992-98	**REC5007672**	5000623	30 - 11/16"	25" Standard
V4 60°	1995-06	**REC5000615**	5000615	24 - 3/4"	20" Standard
V4 60°	1995-06	**REC5000624**	5000624	29 - 3/4"	25" Standard
V6 All	1976-91	**REC5000618**	5000618	25 - 1/4"	20" Standard
V6 All	1976-91	**REC5000626**	5000626	30 - 1/4"	25" Standard
V6 90°	1992-06	**REC5000614**	5000614	25 - 11/16"	20" Standard
V6 90°	1992-06	**REC5007672**	5000623	30 - 11/16"	25" Standard
V6 60°	1991-06	**REC5000615**	5000615	24 - 3/4"	20" Standard
V6 60°	1991-06	**REC5000624**	5000624	29 - 3/4"	25" Standard

EJES HÉLICE
PROP SHAFTS
ASSE ELICHE

REF	RO. OEM	TIPO COLA GEARCASE TYPE TIPO PIEDE	AÑO YEAR ANNO	LONGITUD LENGTH LUNGHEZZA	Ø FIJACIÓN COJINETE PINION BEARING JOURNAL Ø SEDE CUSCINETTO	ESTRIAS SPLINES DENTI	TOPE HÉLICE PROP THRUST WASHER RONDELLA ELICA
REC439138	439138	2 Cyl. Loopcharged Small	1989-05	13 - 13/32"	1.0"	13	**REC320305**
	436834	V4 60° Small	1995-06	16 - 9-16"	1 - 1/8"	13	**REC127084**
REC439185	439185	2 - 3 Cyl. Loopcharged	1975-06	14 - 29/64"	1 - 1/8"	13	**REC127084**
REC395209	395209	"O" Large	1979-90	17 - 27/22"	1 - 3/16"	15	
REC436888	436888	V4 90° Small	1989-05	15 - 7/16"	1 - 1/8"	13	**REC127084**
REC5004765	5004765	"O" Large "M" Large	1991-06 2001-06	17 - 7/8"	1 - 1/4"	15	**REC126870**

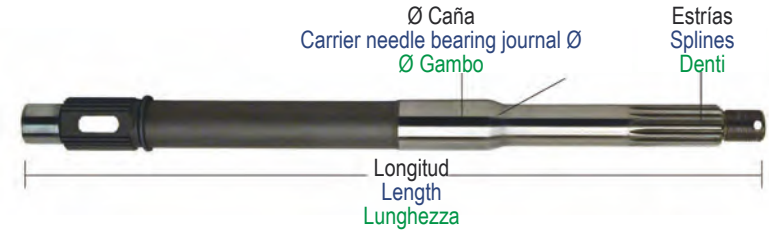

Tope hélice
Prop Thrust washer
Punta elica



GUÍA EJES HÉLICE
PROP SHAFT APPLICATIONS
GUIDA ASSE ELICHE

MODELO MODEL MODELLO	AÑO YEAR ANNO	TIPO COLA GEARCASE TYPE TIPO PIEDE	REF	R.O. OEM
J10	2002-07	4 Tiempos / 4 Strokes / 4 Tempi	**REC57610-93901**	5033193
J15	2002-07	4 Tiempos / 4 Strokes / 4 Tempi	**REC57610-93901**	5033193
2 Cyl. Loopcharged	1989-06	Pequeño / Small / Corto	**REC439138**	439138
2 & 3 Cyl. Loopcharged	1975-06	Largo / Large / lungho	**REC439185**	439185
V4 All Crossflow	1978-98	Pequeño / Small / Corto (V4 90°)	**REC436888**	436888
V4 90° All	1984-90	"O"	**REC395209**	395209
V4 90° All	1991-98	"O"	**REC5004765**	5004765
V4 60°	1995-06	"O"	**REC5004765**	5004765
V6 90°	1978-90	"O"	**REC395209**	395209
V6 90°	1991-06	"O"	**REC5004765**	5004765
V6 60°	1991-06	"O"	**REC5004765**	5004765
V6	2002-06	"M"	**REC5004765**	5004765

TUERCA VARILLA CAMBIO
TURNBUCKE, CUTCH ROD
DADO ASTA CAMBIO

Ref.	R.O.
REC23311-95DL0	5031449

MOTORES / ENGINES / MOTORI
E25 / E30 / E40
J10 / J15 / J25 / J30 / J40 / J50
BJ40 / BJ50
(1999-07)
4 Tiempos / 4 Strokes / 4 Tempi



CASQUILLO BASCULANTE
BUSH, SWIVEL
TAPO GIREVOLE

Ref.	R.O.
REC43211-87JL0	5032058

MOTORES / ENGINES / MOTORI
E25 / E30 / E40 / E50
J10 / J15 / J25 / J30 / J40 / J50
BJ40 / BJ50
(2000-07)
4 Tiempos / 4 Strokes / 4 Tempi



PASADOR
COTTER PIN
COPPIGLIA

Ref.	R.O.
REC314502	314502
REC3852056	3852056
REC18-32665	302804
REC309955	309955
REC320785	320785
REC328522	552906



TUERCA
NUT
DADO

Ref.	R.O.	
REC314503	314503	5/8" NC 11
REC318971	318971	7/16" NC14
REC319891	319891	1/2" NC13



KIT CIERRE HÉLICES SIN TOPE
KIT WITHOUT THRUST WASHER
KIT CHIUSURA

Ref.	R.O.
REC175267	175267



Ref.	R.O.
REC175266	175266



KIT CIERRE HÉLICES
PROP NUT KITS
KIT CHIUSURA ELICA

Ref.	R.O.
REC57630-96300	5032170

MOTORES / ENGINES / MOTORI
E25 / E30 /
J25 / J30
BJ25
(2000-07)
4 Tiempos / 4 Strokes / 4 Tempi



Ref.	R.O.
REC57630-94500	5030976

MOTORES / ENGINES / MOTORI
E60 / J60 / BJ60
E70 / J70 / BJ70
(1998-04)
4 Tiempos / 4 Strokes / 4 Tempi



Ref.	R.O.
REC57630-94300	5031548

MOTORES / ENGINES / MOTORI
E40 / J40 / BJ40
E50 / J50 / BJ50
(1999-06)
4 Tiempos / 4 Strokes / 4 Tempi



Ref.	R.O.
REC57630-92E00	5035460

MOTORES / ENGINES / MOTORI
J200 / J225
BJ200 / BJ225
(2004-06)
4 Tiempos / 4 Strokes / 4 Tempi



Ref.	R.O.
REC386866	386866

MOTORES / ENGINES / MOTORI
2 & 3 Cyl. (1972+) Small



Ref.	R.O.
REC5005034	5005034

MOTORES / ENGINES / MOTORI
2 & 3 Cyl. (1975+) Large
V4 (1973+) Small



Ref.	R.O.
REC414153	434153

MOTORES / ENGINES / MOTORI
V4 / V6 "O" (1976-90) Large



Ref.	R.O.
REC22186	

MOTORES / ENGINES / MOTORI
V4 / V6 / V8 "O" (1991+) Large



KIT CIERRE SIN ARANDELA
PROP KITS WITHOUT WASHER
KIT SENSA RONDELLA

Ref.	R.O.
REC175269	175269

MOTORES / ENGINES / MOTORI
9.9 - 15 HP

CONTIENE / CONTAINS / CONTIENE:

Ref.	R.O.
REC323942	323942
REC318971	318971
REC328522	328522



Ref.	R.O.
REC175268	175268

MOTORES / ENGINES / MOTORI
2 Cyl. Crossflow 20 - 35 HP (1980-05)

CONTIENE / CONTAINS / CONTIENE:

Ref.	R.O.
REC323943	323943
REC319891	319891
REC320785	320785



KIT TUERCA
NUT SET
KIT DADI

Ref.	R.O.
REC398042	398042

3/4" NF 16
Incluye / Includes / Incloso REC3852056



TOPE HÉLICE
THRUST WASHER
RONDELLA CHIUSSURA

Ref.	R.O.	Grosor Thick Spessore	Ø Ext	Motor Motor Motore
REC320305	320305	15/32"	2 - 1/8"	
REC127084	127084	19/32"	2 - 9/16"	
REC126870	3852020	3/4"	2 -7/8"	"O", "M" (1991+)
REC319890	319890	3/8"	1 - 3/4"	2 Cyl. Crossflow 20-35 HP
REC334590	334590	5/8"	1 - 1/2"	9.9 - 15 HP (1989+)



TOPE HÉLICE ESTRIADO
SPLINE WASHER
RONDELLA CHIUSSURA

Ref.	R.O.	Estrias Spline Denti	Ø Eje Ø Shaft Ø Asse
REC315810	315810	13	7/8"
REC320570	320570	15	1"
REC323942	323942	13	5/8"
REC323943	323943	14	13/16"



GUÍA DE KITS DE RECAMBIOS DE CIERRE
PROPELLER KITS & HARDWARE APPLICATIONS
GUIDA RICAMBI CHIUSURA ELICHE

MODELO MODEL MODELLO	AÑO YEAR ANNO	TOPE THRUST WASHER RONDELLA PUNTA	TOPE ESTRIADO APLINE WASHER RONDELLA DENTATA	TUERCA NUT DADO	PASADOR PIN SPINA	KIT SIN ARANDELA KIT WHITHOUT WASHER KIT SENZA RONDELLA	KIT CON ARANDELA KIT WHITH WASHER KIT CON RONDELLA
9.9 - 15 HP	1974-88		REC323942	REC318971	REC328522	REC175269	
9.9 - 15 HP	-1989	REC334590	REC323942	REC318971	REC328522	REC175269	
2 Cyl. Crossflow 20-35 HP, Thru-prop exhaust	1980-05	REC319890	REC323943	REC319891	REC320785	REC175268	
2-Cyl. Loopcharged, 40-60 HP	1972-85	REC320305	REC315810	REC314503	REC314502	REC175267	REC386866
2-Cyl. Loopcharged, 40-60 HP small	1986-88	REC320305	REC315810	REC314503	REC314502	REC175267	REC386866
2-Cyl. Loopcharged, 40-60 HP large	1986-88	REC127084	REC315810	REC314503	REC314502	REC175267	REC5005034
2-Cyl. Loopcharged, 40-50 hp	1989-05	REC320305	REC315810	REC314503	REC314502	REC175267	REC386866
2-Cyl. Loopcharged, 55 hp	1989-05	REC127084	REC315810	REC314503	REC314502	REC175267	REC5005034
3-Cyl., 65 + 70 HP	1972-74	REC320305	REC315810	REC314503	REC314502	REC175267	REC386866
3-Cyl., 65, 70, 75 HP small	1975-88	REC320305	REC315810	REC314503	REC314502	REC175267	REC386866
3-Cyl., 65, 70, 75 HP large	1975-88	REC127084	REC315810	REC314503	REC314502	REC175267	REC5005034
3-Cyl., 60, 65, 70 HP	1989-01	REC127084	REC315810	REC314503	REC314502	REC175267	REC5005034
3-Cyl., 25, 30, 35 HP	1996-01		REC323943	REC319891	REC320785		
V4, Ø 7/8" 13 estrías / spline / denti	1973	REC127084	REC315810	REC314503	REC314502	REC175267	REC5005034
V4, Ø 1" 15 estrías / spline / denti	1984-90		REC320570	REC398042	REC3852056	REC175266	REC414153
V4, Ø1" 15 estrías / spline / denti	1991	REC126870	REC320570	REC398042	REC3852056	REC175266	REC22186
V6 / V8	1976-90		REC320570	REC398042	REC3852056	REC175266	REC414153
V6 / V8	1991	REC126870	REC320570	REC398042	REC3852056	REC175266	REC22186

GUÍA DE RECAMBIOS CIERRE DE HÉLICE
PROPELLER KITS & HARDWARE APPLICATIONS
GUIDA RICAMBI CHIUSURA ELICHE

MODELO MODEL MODELLO	AÑO YEAR ANNO	ARANDELA WASHER RONDELLA	ESPACIADOR SPACER SPESSORE	TUERCA NUT DADO	PASADOR PIN SPINA	KIT KIT KIT
9.9/15	1974-78		REC323942	REC318971	REC328522	REC175269
9.9/15	1989	REC334590	REC323942	REC318971	REC328522	REC175269
20	1985	REC319890	REC323943	REC319891	REC320785	REC175268
25	1985	REC319890	REC323943	REC319891	REC320785	REC175268
30	1985	REC319890	REC323943	REC319891	REC320785	REC175268
35	1976	REC319890	REC323943	REC319891	REC320785	REC175268
40	1984	REC320305	REC315810	REC314503	REC314502	REC175267
45	1985	REC320305	REC315810	REC314503	REC314502	REC175267
48	1987	REC320305	REC315810	REC314503	REC314502	REC175267
50	1972-74	REC127084	REC315810	REC314503	REC314502	REC175267
50	1975-76	REC320305	REC315810	REC314503	REC314502	REC175267
50	1979	REC320305	REC315810	REC314503	REC314502	REC175267
50	1981	REC320305	REC315810	REC314503	REC314502	REC175267
50	1982	REC320305	REC315810	REC314503	REC314502	REC175267
55	1977-79	REC127084	REC315810	REC314503	REC314502	REC175267
55	1981	REC320305	REC315810	REC314503	REC314502	REC175267
55	1983	REC127084	REC315810	REC314503	REC314502	REC175267
55	1985	REC127084	REC315810	REC314503	REC314502	REC175267
60	1971	REC127084	REC315810	REC314503	REC314502	REC175267
60	1980	REC320305	REC315810	REC314503	REC314502	REC175267
65	1972-73	REC127084	REC315810	REC314503	REC314502	REC175267
65 Comm.	1984	REC127084	REC315810	REC314503	REC314502	REC175267
70 (15")	1979-85	REC320305	REC315810	REC314503	REC314502	REC175267
70 (20")	1974-94	REC127084	REC315810	REC314503	REC314502	REC175267
75 (15")	1975-88	REC320305	REC315810	REC314503	REC314502	REC175267
75 (20")	1975-87	REC127084	REC315810	REC314503	REC314502	REC175267
85	1971-80	REC127084	REC315810	REC314503	REC314502	REC175267
88	1987-94	REC127084	REC315810	REC314503	REC314502	REC175267
90	1981-94	REC127084	REC315810	REC314503	REC314502	REC175267
100	1971-72	REC127084	REC315810	REC314503	REC314502	REC175267
100	1979-94	REC127084	REC315810	REC314503	REC314502	REC175267
100 Comm.	1984		REC320570	REC5008966 / REC398042	REC3852056	REC175266
110	1987-94	REC127084	REC315810	REC314503	REC314502	REC175267
115	1973-94	REC127084	REC315810	REC314503	REC314502	REC175267
120	1985		REC320570	REC5008966 / REC398042	REC3852056	REC175266
120	1986-94	REC127084	REC315810	REC314503	REC314502	REC175267
125	1971-72	REC127084	REC315810	REC314503	REC314502	REC175267
135	1973-76	REC127084	REC315810	REC314503	REC314502	REC175267
140	1977-84	REC127084	REC315810	REC314503	REC314502	REC175267
140	1985		REC320570	REC5008966 / REC398042	REC3852056	REC175266
140	1986-94	REC127084	REC315810	REC314503	REC314502	REC175267
150	1978-90		REC320570	REC5008966 / REC398042	REC3852056	REC175266
150	1991	REC126870	REC320570	REC5008966 / REC398042	REC3852056	REC175266
155 Comm.	1984-90		REC320570	REC5008966 / REC398042	REC3852056	REC175266
155 Comm.	1991	REC126870	REC320570	REC5008966 / REC398042	REC3852056	REC175266
175	1977-90		REC320570	REC5008966 / REC398042	REC3852056	REC175266
175	1991	REC126870	REC320570	REC5008966 / REC398042	REC3852056	REC175266
185	1984-90		REC320570	REC5008966 / REC398042	REC3852056	REC175266
185	1991	REC126870	REC320570	REC5008966 / REC398042	REC3852056	REC175266
200	1986-90		REC320570	REC5008966 / REC398042	REC3852056	REC175266
200	1991	REC126870	REC320570	REC5008966 / REC398042	REC3852056	REC175266
225	1986-90		REC320570	REC5008966 / REC398042	REC3852056	REC175266
225	1991	REC126870	REC320570	REC5008966 / REC398042	REC3852056	REC175266
235	1976-90		REC320570	REC5008966 / REC398042	REC3852056	REC175266
275	1985-90		REC320570	REC5008966 / REC398042	REC3852056	REC175266
275	1991	REC126870	REC320570	REC5008966 / REC398042	REC3852056	REC175266
3.6 L	1985-90		REC320570	REC5008966 / REC398042	REC3852056	REC175266
300	1991	REC126870	REC320570	REC5008966 / REC398042	REC3852056	REC175266
1.6 Seadrive	1982-90	REC127084	REC315810	REC314503	REC314502	REC175267
2.5 L Seadrive	1984-90		REC320570	REC5008966 / REC398042	REC3852056	REC175266
2.6 L Seadrive	1982-90		REC320570	REC5008966 / REC398042	REC3852056	REC175266

KITS REPARACIÓN COLA
GEARCASE SEAL KITS
KIT RIPARAZIONE PIEDE

CAMBIO MECÁNICO ESCAPE A TRAVÉS DE HÉLICE
MECHANICAL SHIFT THRU-PROP EXHAUST
CAMBIO MECCANICO, SCARICO TRAMITE L'ELICA

Ref.	R.O.
REC396350	396350

MOTORES / ENGINES / MOTORI
9.9, 15 HP (-1974)
9.9, 15 HP (-1974) (4 Tiempos / 4 Strokes / 4 Tempi)



Ref.	R.O.
REC396351	396351

MOTORES / ENGINES / MOTORI
2 Cyl. Crossflow
20, 25, 30, 35 HP



Ref.	R.O.
REC433550	433550

MOTORES / ENGINES / MOTORI
Cola pequeña / Small housing / Gambo corto
40, 48, 50 HP 2 cyl Loopcharged (1989-05)

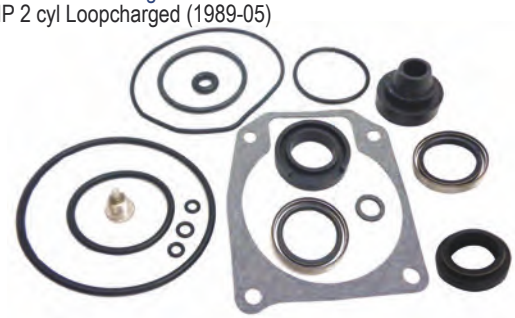

Ref.	R.O.
REC396355	396355

MOTORES / ENGINES / MOTORI
Cola pequeña / Small housing / Gambo corto
2 cyl Loopcharged (1975-88) 40 - 60 HP
3 cyl Loopcharged (1975-88) 60 - 75 HP



Ref.	R.O.
REC5000309	5000309

MOTORES / ENGINES / MOTORI
Cola larga / Large housing / Gambo lungo
2 cyl Loopcharged (1975-06) 40 - 60 HP
3 cyl Loopcharged (1975-01) 60 - 75 HP

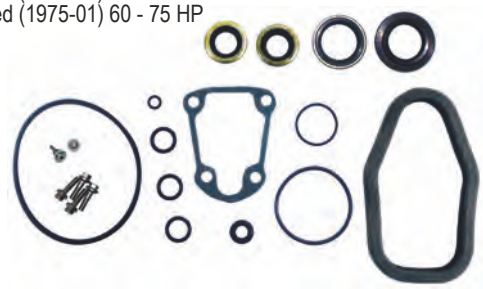

TODOS CON CAMBIO MECÁNICO V4 / V6 / V8 (1978-06)
ALL MECHANICAL SHIFT V4 / V6 / V8 (1978-06)
TUTTI I PIEDI CAMBIO MECCANICO V4 / V6 / V8 (1978-06)

Ref.	R.O.
REC5006373	5006373

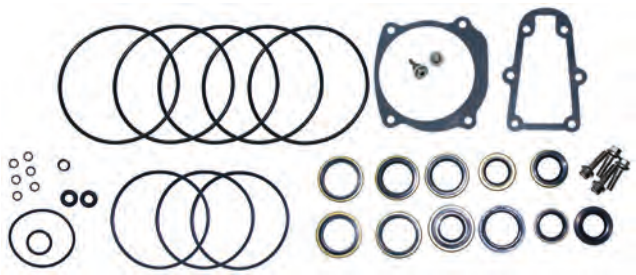

CAMBIO ELÉCTRICO CON ESCAPE EN ALETA DE CAVITACIÓN
ELECTRIC SHIFT WITH CAVITATION PLATE EXHAUST
CAMBIO ELETTRICO CON SCARICO NELL'ALETTA DI CAVITAZIONE

Ref.	R.O.
REC87608	

MOTORES / ENGINES / MOTORI
V4 (1962-68)



CAMBIO ELÉCTRICO/ HIDRÁULICO ESCAPE A TRAVÉS DE HÉLICE
ELECTRIC / HYDRAULIC SHIFT THRU-PROP-EXHAUST
CAMBIO ELETTRICO / IDRAULICO CON SCARICO DALL'ELICA

Ref.	R.O.
REC87622	

MOTORES / ENGINES / MOTORI
2 Cyl Loopcharged (1971-74)

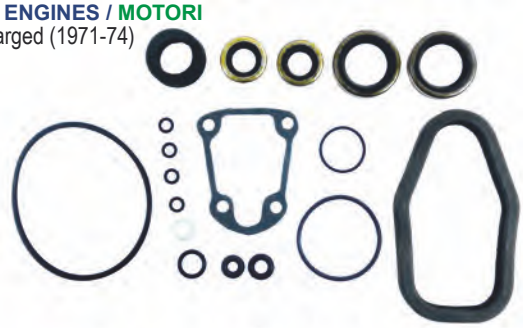

Ref.	R.O.
REC43713	

MOTORES / ENGINES / MOTORI
55, 100, 125 HP V4 Crossflow (1971-72)



COLA DE 2 PIEZAS CON ESCAPE EN ALETA DE CAVITACIÓN
TWO-PIECE GEARCASE WITH CAVITATION PLATE EXHAUST
CAMBIO ELETTRICO CON SCARICO NELL'ALETTA DI CAVITAZIONE

Ref.	R.O.
REC87604	

MOTORES / ENGINES / MOTORI
5.5, 6 HP (1955-67)



Ref.	R.O.
REC87606	

MOTORES / ENGINES / MOTORI
18 HP (1958-65)

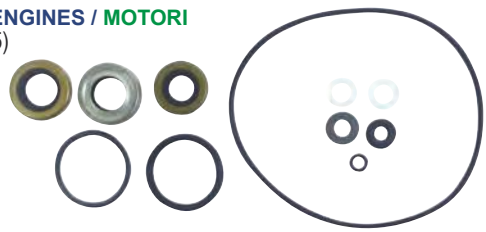

Ref.	R.O.
REC87607	

MOTORES / ENGINES / MOTORI
25, 28, 30, 33, 35, 40 HP (1955-73)
Cambio manual / Manual shift / Cambio manuale



Ref.	R.O.
REC87617	

MOTORES / ENGINES / MOTORI
6 HP (1968-79)



Ref.	R.O.
REC87619	

MOTORES / ENGINES / MOTORI
20, 25 HP (1979-82)



Ref.	R.O.
REC396352	396352

MOTORES / ENGINES / MOTORI
25, 28 HP (1985+)



KIT JUNTAS Y RETENES COLA
LOWER UNIT SEAL KITS
KIT GUARNIZIONI E TENUTE PIEDE

Ref.	R.O.
REC25700-95D01	5032167, 5036040

MOTORES / ENGINES / MOTORI
E25 / J25 / E30 / J30 (2000-07)
4 Tiempos / 4 Strokes / 4 Tempi



Ref.	R.O.
REC25700-88L00	5031456

MOTORES / ENGINES / MOTORI
E40 / J40 / BJ40
E50 / J50 / BJ50
(1999-06)
4 Tiempos / 4 Strokes / 4 Tempi



Ref.	R.O.
REC25700-90J01	5033798

MOTORES / ENGINES / MOTORI
J90 / BJ90
J115 / BJ115
(2003-06)
4 Tiempos / 4 Strokes / 4 Tempi



Ref.	R.O.
REC25700-92J00	5033922

MOTORES / ENGINES / MOTORI
J140 / BJ140
(2003-06)
4 Tiempos / 4 Strokes / 4 Tempi

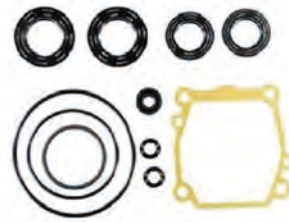

Ref.	R.O.
REC25700-93J00	5035077

MOTORES / ENGINES / MOTORI
J200 / J225 / BJ200 / BJ225
(2004-06)
4 Tiempos / 4 Strokes / 4 Tempi



Ref.	R.O.
REC25700-99E00	5034776

MOTORES / ENGINES / MOTORI
J60 / J70 / BJ60 / BJ70
(2005-06)
4 Tiempos / 4 Strokes / 4 Tempi

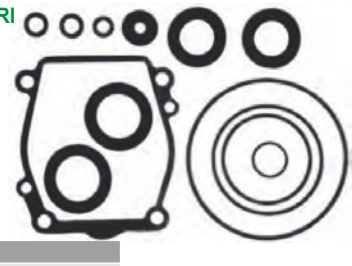

Ref.	R.O.
REC25700-95J00	5037038

MOTORES / ENGINES / MOTORI
J25 / BJ25 (2006-07)

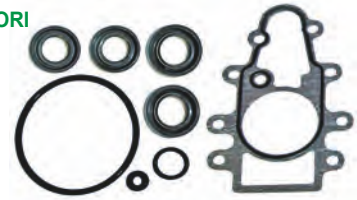

GUÍA KITS REPARACIÓN COLA
GEARCASE SEAL KIT APPLICATION
GUIDA KIT RIPARAZIONE PIEDI

Modelo / Model / Modello	AÑO / YEAR / ANNO	Ref.
5.5	1955-67	REC87604
6	1955-67	REC87604
6	1968-79	REC87617
7.5	1955-67	REC87604
9.9/15	1974 +	REC396350
18	1958-65	REC87606
20	1966-73	REC87606
20	1981-82	REC87619
20	1985 +	REC396351
25	1955-59	REC87607
25	1969-78	REC87606
25	1979-82	REC87619
25	1984	REC396352
25	1985 +	REC396351
25	1990-95	REC433550
25 Comm.	1985 +	REC396352
28	1962-70	REC87607
28	1985 +	REC396352
30	1955-59	REC87607
30	1976-95	REC396351
33	1962-70	REC87607
35	1955-59	REC87607
35	1977-92	REC396351
40 Cambio Manual / Manual Shift / Cambio manuale	1960-73	REC87607
40	1976-88	REC396355
40	1989 +	REC433550
48	1976-88	REC396355
48	1989, 92-93	REC433550
50	1971-74	REC87622
50	1976-88	REC396355
50	1989 +	REC433550
55	1976-88	REC396355
60 Elect.	1960-68	REC87608
60 2-Cyl.	1976-88	REC396355
60 3-Cyl.	1978-01	REC5000309
65 Elect.	1960-68	REC87608
65	1978-01	REC5000309
70	1978-01	REC5000309
75 Elect.	1960-68	REC87608
75	1978-01	REC5000309
75 Cola pequeña / Small Gearcase / Gambo corto	1976-88	REC396355
V4	1978-84	REC5006373
85 Elect.	1968	REC87608
85 V4	1973-83	REC5006373

Modelo / Model / Modello	AÑO / YEAR / ANNO	Ref.
85	1991-95	REC5006373
88	1985 +	REC5006373
90 Elect.	1964-65	REC87608
90 V4	1973-83	REC5006373
90	1985+	REC5006373
100 V4	1973-83	REC5006373
100 Comm.	1984-95	REC5006373
100	1991-01	REC5006373
110 V4	1973-83	REC5006373
110	1985-Up	REC5006373
115 V4	1973-83	REC5006373
115	1985-Up	REC5006373
120	1985-92	REC5006373
120	1993-Up	REC5006373
125	1991-98	REC5006373
125 Comm.	1991-93	REC5006373
135 V4	1973-83	REC5006373
140 V4	1973-83	REC5006373
140	1985-94	REC5006373
150 V6	1978-86	REC5006373
150	1991-95	REC5006373
155 Comm.	1984-93	REC5006373
175 V6	1977-86	REC5006373
175	1991-Up	REC5006373
185	1991-93	REC5006373
200 V6	1976-86	REC5006373
200	1991-Up	REC5006373
V6	1979-92	REC5006373
225	1991-95	REC5006373
235 V6	1977-86	REC5006373
V8	1985-91	REC5006373
250 V8	1991-95	REC5006373
300 V8	1991-95	REC5006373
OMC		
1.6 L	1985-90	REC5006373
1.8 L	1987	REC5006373
2.0 L	1988-90	REC5006373
2.5 L	1984-85	REC5006373
2.6 L	1984-86	REC5006373
2.7 L	1987	REC5006373
3.0 L	1988-90	REC5006373
3.6 L	1987	REC5006373
4.0 L	1989-90	REC5006373

GUÍA COJINETES PARTE INFERIOR COLA
LOWER HOUSING BEARINGS APPLICATIONS
GUIDA CUSCINETTI PARTE INFEIORE PIEDE

MODELO / MODEL / MODELLO	AÑO / YEAR / ANNO	EJE COLA / DRIVE SHAFT / ASSE PIEDE	PIÑÓN COJINETE / PINION BEARING / CUSCINETTI PIGNONE	COJINETE AGUJAS / NEEDLE BEARING / CUSCINETTI AD AGHI	PIÑÓN M. ATRÁS / GEAR REVERSE / PIGNONE MAR. INDIETRO	MARCHA ADELANTE / FORWARD / MARCIA AVANTI	MARCHA ADELANTE / FORWARD / MARCIA AVANTI	MARCHA ATRÁS / REVERSE / RETROMARCIA	MARCHA ADELANTE / FORWARD / MARCIA AVANTI
2 Cyl. Loopcharged (1975-85) 40 - 60 HP									
40 50 55 60	1984-85 1975-85 1976-85 1980-85	REC31-32575T1	REC386766	REC386765	REC386764				
2 Cyl. Loopcharged (1986-05) 40 - 60 HP									
40 Pequeño antiguo / Small Old / Gambo corto vecchio	1986-88	REC31-32575T1	REC386766	REC386765	REC386764				
40 Pequeño nuevo / Small New / Gambo corto nuovo	1989-00	REC398901 / REC333771	REC382343	REC386765	REC386764	REC382407	REC432264	REC397537 / REC332514	REC397538 / REC333725
45 Pequeño nuevo / Small New / Gambo corto nuovo	1989-97	REC398901 / REC333771	REC382343	REC386765	REC386764	REC382407		REC397537 / REC332514	REC397538 / REC333725

MODELO MODEL MODELLO	AÑO YEAR ANNO	EJE COLA DRIVE SHAFT ASSE PIEDE	PIÑÓN COJINETE PINION BEARING CUSCINETTI PIGNONE	COJINETE AGUJAS NEEDLE BEARING CUSCINETTI AD AGHI	PIÑÓN M. ATRÁS GEAR REVERSE PIGNONE MAR. INDIETRO	MARCHA ADELANTE FORWARD MARCIA AVANTI	MARCHA ADELANTE FORWARD MARCIA AVANTI	MARCHA ATRÁS REVERSE RETROMARCIA	MARCHA ADELANTE FORWARD MARCIA AVANTI
45 Largo Large Lungo	1987-97	REC385068 / REC317230	REC382343	REC379504	REC382407	REC382407		REC382408 / REC313447	REC385043 / REC324766
48 Pequeño nuevo Small New Gambo corto nuovo	1989-96	REC398901 / REC333771	REC382343	REC386765	REC386764	REC382407	REC432264	REC397537 / REC332514	REC397538 / REC333725
48 Largo Large Lungo	1987-96	REC385068 / REC317230	REC382343	REC379504	REC382407	REC382407		REC382408 / REC313447	REC385043 / REC324766
50 Pequeño antiguo Small Old Gambo corto vecchio	1986-88	REC31-32575T1	REC386766	REC386765	REC386764				
50 Pequeño nuevo Small New Gambo corto nuovo	1989-05	REC398901 / REC333771	REC382343	REC386765	REC386764	REC382407	REC432264	REC397537 / REC332514	REC397538 / REC333725
50 Largo Large Lungo	1986-05	REC385068 / REC317230	REC382343	REC379504	REC382407	REC382407		REC382408 / REC313447	REC385043 / REC324766
55 Pequeño antiguo Small Old Gambo corto vecchio	1986-88	REC31-32575T1	REC386766	REC386765	REC386764				
55 Pequeño nuevo Small New Gambo corto nuovo	1989-05	REC398901 / REC333771	REC382343	REC386765	REC386764	REC382407		REC397537 / REC332514	REC397538 / REC333725
55 Largo Large Lungo	1986-05	REC385068 / REC317230	REC382343	REC379504	REC382407	REC382407		REC382408 / REC313447	REC385043 / REC324766
60 Pequeño antiguo Small Old Gambo corto vecchio	1986-88	REC31-32575T1	REC386766	REC386765	REC386764				
60 Largo Large Lungo	1986-88	REC385068 / REC317230	REC382343	REC379504	REC382407	REC382407		REC382408 / REC313447	REC385043 / REC324766
3 Cyl. Loopcharged (1973-01) 65 - 75 HP									
65 Largo Large Lungo	1973	REC385068 / REC317230	REC382343	REC379504	REC382407	REC382407		REC382408 / REC313447	REC385043 / REC324766
65 Largo Large Lungo	1984-01	REC385068 / REC317230	REC382343	REC379504	REC382407	REC382407		REC382408 / REC313447	REC385043 / REC324766
70 Pequeño Small Corto	1974-01	REC31-32575T1	REC386766	REC386765	REC386764				
75 Pequeño Small Corto	1979-85	REC31-32575T1	REC386766	REC386765	REC386764				
75 Largo Large Lungo	1975-88	REC385068 / REC317230	REC382343	REC379504	REC382407	REC382407		REC382408 / REC313447	REC385043 / REC324766
V4 (1978-83)									
85 90 100 115	1978-80 1981-83 1980 1978-83	REC387656 / REC327656	REC384195	REC379504	REC382407	REC382407		REC382408 / REC314731	REC385043 / REC324766
V4 (1984+)									
80 Pequeño / Small Corto	1991-99	REC387656 / REC327656	REC384195	REC379504	REC382407	REC382407		REC382408 / REC314731	REC385043 / REC324766
80 "O"	1991-99	REC387656 / REC327656	REC387817	REC434467	REC382407	REC389039		REC382408 / REC314731	REC389042 / REC327669
90 Pequeño /Small Corto	1984-03	REC387656 / REC327656	REC384195	REC379504	REC382407	REC382407		REC382408 / REC314731	REC385043 / REC324766
90 "O"	1984-90	REC387656 / REC327656	REC387817	REC387247	REC382407	REC389039		REC382408 / REC314731	REC389042 / REC327669
90 "O"	1991-03	REC387656 / REC327656	REC387817	REC434467	REC382407	REC389039		REC382408 / REC314731	REC389042 / REC327669
100 Pequeño / Small Corto	1984-05	REC387656 / REC327656	REC384195	REC379504	REC382407	REC382407		REC382408 / REC314731	REC385043 / REC324766
100 "O"	1984-90	REC387656 / REC327656	REC387817	REC387247	REC382407	REC389039		REC382408 / REC314731	REC389042 / REC327669
100 "O"	1991-05	REC387656 / REC327656	REC387817	REC434467	REC382407	REC389039		REC382408 / REC314731	REC389042 / REC327669
115 Pequeño / Small Corto	1984+	REC387656 / REC327656	REC384195	REC379504	REC382407	REC382407		REC382408 / REC314731	REC385043 / REC324766
115 "O" Type	1984-90	REC387656 / REC327656	REC387817	REC387247	REC382407	REC389039		REC382408 / REC314731	REC389042 / REC327669

MODELO MODEL MODELLO	AÑO YEAR ANNO	EJE COLA DRIVE SHAFT ASSE PIEDE	PIÑÓN COJINETE PINION BEARING CUSCINETTI PIGNONE	COJINETE AGUJAS NEEDLE BEARING CUSCINETTI AD AGHI	PIÑÓN M. ATRÁS GEAR REVERSE PIGNONE MAR. INDIETRO	MARCHA ADELANTE FORWARD MARCIA AVANTI	MARCHA ADELANTE FORWARD MARCIA AVANTI	MARCHA ATRÁS REVERSE RETROMARCIA	MARCHA ADELANTE FORWARD MARCIA AVANTI
115 “O” Type	1991+	REC387656 / REC327656	REC387817	REC434467	REC382407	REC389039		REC382408 / REC314731	REC389042 / REC327669
120 “O” Type	1985-90	REC387656 / REC327656	REC387817	REC387247	REC382407	REC389039		REC382408 / REC314731	REC389042 / REC327669
120 “O” Type	1991-94	REC387656 / REC327656	REC387817	REC434467	REC382407	REC389039		REC382408 / REC314731	REC389042 / REC327669
125 “O” Type	1989-90	REC387656 / REC327656	REC387817	REC387247	REC382407	REC389039		REC382408 / REC314731	REC389042 / REC327669
125 “O” Type	1991-98	REC387656 / REC327656	REC387817	REC434467	REC382407	REC389039		REC382408 / REC314731	REC389042 / REC327669
130 Pequeño / Small Corto	1995-00	REC387656 / REC327656	REC384195	REC379504	REC382407	REC382407		REC382408 / REC314731	REC385043 / REC324766
130 “O” Type	1995-00	REC387656 / REC327656	REC387817	REC434467	REC382407	REC389039		REC382408 / REC314731	REC389042 / REC327669
135 Pequeño / Small Corto	2001+	REC387656 / REC327656	REC384195	REC379504	REC382407	REC382407		REC382408 / REC314731	REC389042 / REC327669
135 “O” Type	2001+	REC387656 / REC327656	REC387817	REC434467	REC382407	REC389039		REC382408 / REC314731	REC389042 / REC327669
135 “M”	2002+	REC387656 / REC327656	REC387817		REC382407	REC389039		REC389042 / REC349193	REC389042 / REC327669
140 Pequeño / Small Corto	1984	REC387656 / REC327656	REC384195	REC379504	REC382407	REC382407		REC382408 / REC314731	REC385043 / REC324766
140 “O”	1985-90	REC387656 / REC327656	REC387817	REC387247	REC382407	REC389039		REC382408 / REC314731	REC389042 / REC327669
140 “O”	1991-94	REC387656 / REC327656	REC387817	REC434467	REC382407	REC389039		REC382408 / REC314731	REC389042 / REC327669
V6 (1979-90)									
150	1979-90	REC387656 / REC327656	REC387817	REC387247	REC382407	REC389039		REC382408 / REC314731	REC389042 / REC327669
155	1984-90								
175	1979-90								
185	1984-90								
200	1979-90								
225	1986-90								
235	1979-85								
V6 (1991+)									
150 “O”	1991+	REC387656 / REC327656	REC387817	REC434467	REC382407	REC389039		REC382408 / REC314731	REC389042 / REC327669
150 “M”	2002 +							REC389042 / REC349193	
175 “M”	2002 +							REC389042 / REC349193	
175 “O”	1991+							REC382408 / REC314731	
185 “O”	1993-94							REC382408 / REC314731	
200 “O”	1991+							REC382408 / REC314731	
200 “M”	2002 +							REC389042 / REC349193	
225 “O”	1991+							REC382408 / REC314731	
225 “M”	2002 +							REC389042 / REC349193	

GUÍA RETENES
SEAL APPLICATION
GUIDA PARAOLIO

REF.	R.O. OEM	EJE SHAFT ASSE	CALIBRE BORE FORO
REC302564	302564	0.7500	1.3750
REC303345	303345	0.5625	1.0000
REC767970	305987	1.0000	1.3750
REC309989	309989	1.3750	2.0000
REC310599	310599	1.0000	1.5000
REC310649	310649	2.5000	3.0000
REC313282	313282	0.5625	1.0625
REC313284	313284	0.6250	1.1250
REC341281	314281	1.25	1.6875
REC330327	330327	0.6250	1.1250
REC342786	332205	0.7500	1.2500
REC332261	332261	0.6250	1.3750
REC908855	908855	625	1000
REC353076	332942	1.5625	2.0625
REC339620	339620	1.6250	2.1250
REC911019	911019	1.0000	1.3750
REC911685	911685	2.0000	2.5000
REC3853655	916058	0.5000	0.9062
REC321786	321786	0.6250	1.1250
REC321787	321787	0.6250	1.1250
REC321788	321788	0.5000	1.0000
REC331103	331103	1.125	1625
REC341280	341280	0.875	1375
REC3852548	911785	1.375	2.1875
REC321831	321831	0.7500	1.2500

REF.	R.O. OEM	EJE SHAFT ASSE	CALIBRE BORE FORO
REC321895	321895	1.5625	1.9219
REC321928	321928	0.6250	1.3750
REC324639	324639	0.4375	0.9375
REC327031	327031	0.4375	0.8750
REC329922	329922	0.8125	1.3750
REC329923	329923	0.8750	1.3750
REC330137	330137	1.1250	1.6250
REC313353	313353	1.9375	2.4375
REC764337	313992	1.1875	1.8750
REC314167	314167	0.4375	0.9375
REC318972	318972	0.5000	0.8750
REC26-76868	320862	1.1875	1.6875
REC26-69188	321453	0.8750	1.2500
REC321459	321459	0.6250	1.1250
REC321466	321466	0.7500	1.1250
REC321467	321467	1.0000	1.3750
REC321480	321480	0.5000	1.2500
REC321481	321481	0.6875	1.2500
REC981195	981195	1.5000	2.1250
REC981196	981196	1.7500	2.5000
REC981268	981268	1.6250	2.5000
REC321481	334950	1.2500	1.6875
REC342786	342786	0.7500	1.1875
REC3852548	3852548	1.3750	2.1875

GUÍA RETENES ACEITE
OIL SEAL APPLICATION
GUIDA KIT PARAOLIO

MODELO MODEL MODELLO	AÑO YEAR ANNO	EJE HÉLICE PROP SHAFT ASSE ÉLICA	UND. UNITS QNT	EJE COLA DRIVE SHAFT ASSE PIEDE	UND. UNITS QNT
1.5, 2, 2.5, 3	1958-68		1	REC327031	1
1..5, 2	1968-90	REC327031	1	REC327031	1
2.5, 4	1973-80	REC327031	1	REC327031	2
2.5	1987	REC324639	2	REC327031	2
2.5, 4	1981-95		1	REC327031	2
3 Weedless	1958-68	REC327031	1		1
3, 4, 6 Weedless	1968-82	REC314167	1	REC314167	1
4	1981-90	REC324639	2		1
4	1984, 1986-95		1	REC324639	2
4.5, 7.5	1980-87		1	REC324639	1
5, 5.5, 6, 7.5	1957-64	REC303345	1	REC303345	1
5, 6, 8	1980-87		1	REC324639	2
6	1965-67		1	REC313282	1
6	1968-79	REC313282	1	REC314167	1
9.5	1964-73	REC303345	1	REC303345	1
9.9	1974-83	REC321481	1	REC321480	1
9.9	1984-95	REC321481	1	REC321480	1
10	1957-58	REC313284	1	REC321788	1
10	1959-63	REC303345	1	REC303345	1
10	1981	REC313282 (inner)	1		1
10	1989	REC321787 / REC321459	1	REC330327 / REC321459	1
14	1988-90	REC321787 / REC321459	1	REC330327 / REC321459	1
15	1974-83	REC321481	2	REC321480	1
15	1984-95	REC321481	2	REC321480	1
18	1957	REC313284	1	REC321788	1
18	1958-73	REC313284	1	REC321788	1
20	1981-82	REC321787 / REC321786	1	REC321786	1
20	1983	REC321787 / REC321786	1	REC321459 / REC321786	1
20	1984	REC318972 / REC321459	1	REC330327 / REC321786	1
20	1985-86	REC26-69188	1	REC321928	1
20	1987-95	REC26-69188	1	REC321928 / REC332261	1
25	1969-76	REC313284	1	REC321788	1
25	1977-78	REC313284	1	REC321788	1
25	1979-82	REC321787 / REC321786	1	REC321786	1
25	1983	REC321787 / REC321786	1	REC321459 / REC321786	1
25	1984	REC321787 / REC321459	1	REC330327 / REC321786	1
25	1985-86	REC26-69188	1	REC321928	2
25	1987-95	REC26-69188	1	REC330327 / REC321786	1
25 C	1982	REC321786	1	REC321786	1
25 C	1983	REC321787 / REC321459	1	REC321459 / REC321786	1
25 C	1984-90	REC321787 / REC321459	1	REC330327 / REC321459	1
28	1962-64	REC302564	1	REC313284	1
28	1987-90	REC321787 / REC321459	1	REC330327 / REC321459	1
30	1984-86	REC26-69188	1	REC321928	1
30	1987-95	REC26-69188	1	REC321928 (inner)	1
33	1965-76	REC302564	1	REC313284	1
35	1957-59	REC302564	1	REC313284	1
35	1976	REC26-69188	1	REC321459	2
35	1977-86	REC26-69188	2	REC321928	2
35	1987-90	REC26-69188	2	REC321928 (inner)	1
40	1960-61	REC302564	1	REC313284	1
40	1962-73	REC302564	1	REC313284	1
40	1974-76	REC302564	1	REC321481	1
40 C	1981-86	REC302564	1	REC321481	2
40	1984-85	REC321467	2	REC321466	2
40 (AR, AE, AT)	1988	REC330137	1	REC330327 / REC321459	1
40	1986-89	REC321467	2	REC342786 / REC321459	1
45 C	1985	REC330137	2	REC330327 / REC321459	1
45 C	1986	REC330137	2	REC342786 / REC321459	1
45 C	1987	REC330137	2	REC330327 / REC321459	1
45 C	1988-94	REC330137	2	REC330327 / REC321459	1
45 C	1995	REC330137	2	REC342786 / REC321466	1
48	1988-95	REC321467	2	REC342786 / REC321466	1
50 (Manual)	1971-74	REC330137	2	REC321459	2
50	1975	REC321467	2	REC321466	1
50	1979	REC330137	2	REC321459	2
50	1980	REC321467	2	REC321466	1
50/60 (Pull Start)	1981-83	REC330137	2	REC321459	1
50/60 (Electric)	1981-83	REC321467	2	REC321466	1
50/60	1984-85	REC321467	2	REC321466	1
50/60 Pequeño / Small / Corto	1986-87	REC321467	2	REC342786 / REC321466	1
50/60 Largo / Large / Lungo	1986-87	REC330137	2	REC342786 / REC321466	1
50/60	1988-89	REC330137	2	REC342786 / REC321466	1
50	1990-95	REC321467	2	REC342786 / REC321466	1
55	1968-69	REC310599	2	REC321466	2
55	1976-77	REC321467	2	REC321466	2
55	1978	REC321466	1	REC321466	2
55	1979-83	REC330137	2	REC321459	1
55 (Electric)	1980-83	REC310599	2	REC321466	2
55 C	1984	REC330137	2	REC330327 / REC321459	1
55 C	1985	REC330137	2	REC330327	1
55 C	1986	REC330137	2	REC342786 / REC321466	1
55 C	1987-94	REC330137	2	REC330327 / REC321466	1
55 C	1995	REC330137	2	REC342786 / REC321895	1
60	1970	REC310599	1	REC321466	2
60 (3-Cyl.)	1971	REC330137	2	REC321466	2
60 (Pull Start)	1980-83	REC330137	2	REC321459	2
60 (Electric)	1980-83	REC330137	2	REC321466	2
60	1970	REC310599	1	REC321466	2
60 SST	1989	REC321467	2	REC342786 / REC321466	1
60 SST	1990	REC321467	2	REC342786 / REC321466	1
60 (3-Cyl.)	1987-95	REC330137	2	REC342786 / REC321466	1
65 (3-Cyl.)	1972-73	REC330137	2	REC321466	2
65 C	1984-85	REC330137	2	REC321466	2
65 C	1986-89	REC330137	2	REC342786 / REC321466	1
70 Largo / Large / Lungo	1974-85	REC330137	2	REC321466	2
70 Largo / Large / Lungo	1986-95	REC330137	2	REC342786 / REC321466	1
70 Pequeño / Small / Corto	1977-85	REC321467	2	REC321466	2
75 Largo / Large / Lungo	1975-84	REC330137	2	REC321466	2
75 Largo / Large / Lungo	1986-87	REC330137	2	REC342786 / REC321466	1
75 Pequeño / Small /Corto	1975-84	REC321467	2	REC321466	2
85	1969-70	REC310599	2	REC321466	2
85	1971-72	REC330137	2	REC321466	2
85	1973-80	REC330137	2	REC26-69188	2
88	1987-94	REC330137	2	REC329922 / REC329923	1
90	1981-83	REC330137	2	REC26-69188	2
90	1984-94	REC330137	2	REC329922 / REC329923	1
90 Seadrive	1985-90	REC330137	2	REC329922 / REC329923	1
100	1971-72	REC330137	2	REC321466	2
100	1979-80	REC330137	2	REC26-69188	2
100 C	1984-90	REC26-76868	2	REC329922 / REC329923	1
110	1986-88	REC330137	2	REC329922 / REC329923	1
115	1969-70	REC310599	2	REC321466	2
115	1973-83	REC330137	2	REC26-69188	2
115	1984-85	REC330137	2	REC329922 / REC329923	1

MODELO MODEL MODELLO	AÑO YEAR ANNO	EJE HÉLICE PROP SHAFT ASSE ÉLICA	UND. UNITS QNT	EJE COLA DRIVE SHAFT ASSE PIEDE	UND. UNITS QNT
115	1990-94	**REC330137**	2	**REC329922 / REC329923**	1
120	1985	**REC26-76868**	2	**REC329922 / REC329923**	1
120	1986-88	**REC330137**	2	**REC329922 / REC329923**	1
120	1989	**REC26-76868**	2	**REC329922 / REC329923**	1
120	1990-94	**REC330137**	2	**REC329922 / REC329923**	1
125	1971-72	**REC330137**	2	**REC321466**	2
125 C	1989	**REC26-76868**	2	**REC329922 / REC329923**	1
125 C (ESX)	1989	**REC330137**	2	**REC329922**	1
135	1973-76	**REC330137**	2	**REC26-69188**	2
140	1977-83	**REC330137**	2	**REC26-69188**	2
140	1984	**REC330137**	2	**REC26-69188**	2
140	1985	**REC26-76868**	2	**REC329922 / REC329923**	1
140	1986-94	**REC330137**	2	**REC329922 / REC329923**	1
140 TX	1989	**REC26-76868**	1	**REC329922 / REC329923**	1
150	1978-83	**REC26-76868**	2	**REC26-69188**	2

MODELO MODEL MODELLO	AÑO YEAR ANNO	EJE HÉLICE PROP SHAFT ASSE ÉLICA	UND. UNITS QNT	EJE COLA DRIVE SHAFT ASSE PIEDE	UND. UNITS QNT
150	1984	**REC26-76868**	2	**REC329922 / REC329923**	1
155 C	1984-85	**REC26-76868**	2	**REC329922 / REC329923**	1
155 C	1986-90	**REC26-76868**	2	**REC329922 / REC329923**	1
175	1977-85	**REC26-76868**	2	**REC26-69188**	2
175	1986-90	**REC26-76868**	2	**REC329922 / REC329923**	1
185	1984-85	**REC26-43035**	2	**REC329922 / REC329923**	1
185	1990	**REC26-76868**	2	**REC329922 / REC329923**	1
200	1976-83	**REC26-76868**	2	**REC26-69188**	2
200	1984-85	**REC26-76868**	2	**REC329922 / REC329923**	1
200, 225	1986-90	**REC26-76868**	2	**REC329922 / REC329923**	1
235	1978-83	**REC26-76868**	2	**REC26-69188**	2
235	1984-85	**REC26-76868**	2	**REC329922 / REC329923**	1
275	1985-88	**REC26-76868**	2	**REC329922 / REC329923**	1
3.6L, 300	1985-90	**REC26-76868**	2	**REC329922 / REC329923**	1

GUÍA RETENES ACEITE CUERPO EJE DE COLA
DRIVE SHAFT HOUSING OIL SEAL APPLICATION
GUIDA PARAOLIO ASSE PIEDE

MODELO MODEL MODELLO	AÑO YEAR ANNO	REF	UND. UNITS QNT	APLICACIÓN APPLICATION PPLICAZIONE
5, 6, 6.5, 8	1982-01	**REC324639**	1	Eje cola a escape / Driveshaft to Exh Housing / Asse piede - scarico
25, 40, 45, 50, 55	1987-94	**REC330327**	1	Escape a adaptador / Exh Housing to Adapter / Scarico - adattatore
50	1958-68	**REC321467**	1	Eje pivot / Pivot Shaft / Asse perno
60	1958-68			
65	1958-68			
75	1961-68			
80	1961-68			
85	1961-68			
90	1964-68			
100	1964-68			



AROS TÓRICOS
O-RING
O-RING

REF.	R.O. OEM	DIMENSIONES (pulgadas) DIMENSIONS (Inch) DIMENSIONI (pollici) INT. Ø	ANCHO WIDTH LARGHEZZA
REC25-48171	202893	.370	.065
REC301877	301877	.245	.155
REC301967	301967	.799	.103
REC25-33145	302337	2.025	.135
REC302537	302537	1.375	.100
REC125017	302540	1.000	.135
REC302588	302588	1.735	.135
REC339543	303059, 339543	.500	.100
REC3852045	303067, 329381	.360	.100
REC25-62702	303191	.301	.070
REC303347	303347	.445	.090
REC25-35027	303360	1.060	.135
REC304174	304174	.500	.065
REC305123	305123	3.780	.135
REC305242	305242	.300	.135
REC3852928	305270	1.620	.135
REC332583	305739, 317178, 332583, 332584	.250	.065
REC308876	308876	2.235	.100
REC309731	309731	1.185	.100
REC310414	310414	3.625	.135
REC310584	310584	.750	.135
REC25-30613	310585, 310967	.740	.100

REF.	R.O. OEM	DIMENSIONES (pulgadas) DIMENSIONS (Inch) DIMENSIONI (pollici) INT. Ø	ANCHO WIDTH LARGHEZZA
REC25-62705	311338	.750	.065
REC313175	313175	4.750	.135
REC313340	313340	1.690	.100
REC967344	313446	3.315	.135
REC313754	313754	1.835	.100
REC338518	313893, 338518	2.550	.100
REC314491	314491	.970	.065
REC314728	314728	2.125	.100
REC318372	318372	0.320	.155
REC318717	318717	1.500	.210
REC0319662	319662	1.799	.103
REC326649	326649, 329380, 909047	.620	.100
REC326741	326741	4.484	.139
REC333572	333572	.250	.100
REC335523	335523		
REC338522	338522		
REC553126	553126	3.250	.135
REC0554545	554545	1.120	.100
REC908194	908194	4.000	.100
REC908383	908383	2.485	.100
REC909140	909140		
REC25-25439	3852565	.862	.103

KITS REPARACIÓN BOMBA AGUA
WATER PUMP KIT
KITS RIPARAZIONE POMPA ACQUA

Ref.	R.O.
REC12065	

MOTORES / ENGINES / MOTORI
4, 4.5, 5, 6, 7.5 & 8 HP (1980+)
2 Tiempos / 2 Stroke / 2 Tempi

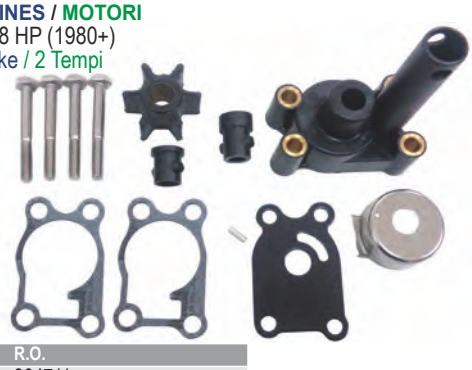

Ref.	R.O.
REC394711	394711

MOTORES / ENGINES / MOTORI
9.9, 15 HP (1974+)
9.9, 15 HP (1994+) 4 Tiempos / 4 Stroke / 4 Tempi



Ref.	R.O.
REC393630	393630

MOTORES / ENGINES / MOTORI
20-35 HP 2 Cyl. (1980-05)
Crossflow con escape a través de la hélice y cola de una pieza
Crossflow with thru-prop exhaust and one-piece gearcase.
Crossflow con scarico dall'elica e piede in 1 pezzo.



Ref.	R.O.
REC395270	395270

MOTORES / ENGINES / MOTORI
18, 25 & 28 HP 2-Cyl. (1979-98)
Crossflow con escape a través de la hélice y cola de una pieza
Crossflow with thru-prop exhaust and one-piece gearcase.
Crossflow con scarico dall'elica e piede in 1 pezzo.



Ref.	R.O.
REC389133	389133

MOTORES / ENGINES / MOTORI
2 Cyl. (1971-78)
3 Cyl. Loopcharged cola corta. Bomba de agua pequeña con chaveta de media luna.
Loopcharged small gearcase. Small water pump with half-moon key impeller.
Loopcharged piede con gambo corto.Pompa acqua piccola con calettatura girante a mezza luna.



Ref.	R.O.
REC439077	439077

MOTORES / ENGINES / MOTORI
2 Cyl. (1984-94)
3 Cyl. Loopcharged cola corta. Bomba de agua pequeña casquillo impulsor de plástico
Loopcharged small gearcase. Small water pump with plastic wedge key impeller.
Loopcharged piede con gambo lungo. Pompa acqua grande con girante a sei pale.



Ref.	R.O.
REC5000308	5000308

MOTORES / ENGINES / MOTORI
40, 45 & 55 HP (1995-05)
40, 50 & 60 HP 2-Cyl.
Loopcharged cola larga. Bomba de agua grande con impoulsor de seis palas.
Loopcharged large gearcase. Large water pump with the six vane impeller.
Loopcharged piede con gambo lungo. Pompa acqua grande con girante a sei pale.



Ref.	R.O.

MOTORES / ENGINES / MOTORI
40, 45, 48 & 50 HP 2-Cyl. (1989-05)
Loopcharged cola corta. Bomba de agua grande con impulsor tres palas.
Loopcharged small gearcase. Large water pump with the three vane impeller.
Loopcharged piede con gambo corto. Pompa acqua grande con girante a tre pale.



Ref.	R.O.
REC391741	391741

MOTORES / ENGINES / MOTORI
40 HP 2 Cyl. (1974-76) Crossflow
40 Comm. 2 Cyl. (1981-87)
Crossflow con escape a través de la aleta de cavitación. Cola de dos piezas. Chaveta de media luna.
Crossflow thru-cavitation plate exhaust and two-piece gearcase. Half-moon key.
Crossflow scarico attraverso l'aletta di cavitazione.



Ref.	R.O.
REC437907	437909

MOTORES / ENGINES / MOTORI
25, 30 & 35 HP 3-Cyl. (1996-01) Loopcharged



Ref.	R.O.
REC432955	432955

MOTORES / ENGINES / MOTORI
65, 70 & 75 HP 3 Cyl. (1986-01)
Loopcharged con cola larga. Bomba de agua grande con chaveta de impulsor de plástico.
Loopcharged large gearcase. Large water pump with plastic wedge key impeller.
Loopcharged piede a gambo lungo. Pompa acqua grande conchiave girante in plastica.



Ref.	R.O.
REC438579	438579

MOTORES / ENGINES / MOTORI
70 & 75 HP 3-Cyl. (1974-78) Loopcharged
Cola larga. Bomba de agua grande con chaveta impulsor de media luna.
Large gearcase. Large water pump with half-moon key impeller.
Piede a gambo lungo. Pompa acqua grande, con calettatura girante a mezza luna.

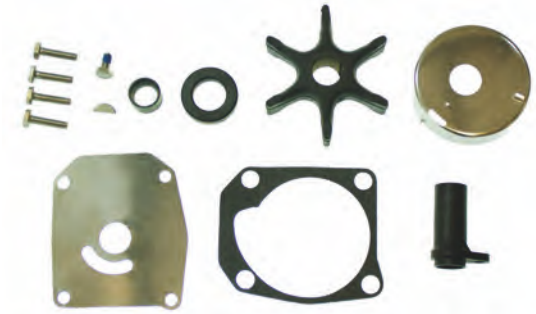

Ref.	R.O.
REC438602	438602

MOTORES / ENGINES / MOTORI
Cola larga / large gearcase / Piede lungo
40-60 HP 2-Cyl. (1979-05) Loopcharged
65, 70 & 75 HP 3-Cyl. (1979-85) Loopcharged
Bomba agua con chaveta impulsor de plástico.
Large water pump with the plastic wedge key impeller.
Piede a gambo lungo. Pompa acqua con chiave girante in plastica.



Ref.	R.O.
REC395073	0395073

MOTORES / ENGINES / MOTORI
(1977-78) V4 con cambio mecánico/hidráulico.
(1976-78) V6 con cambio mecánico/hidráulico. Chaveta impulsor de media luna.
V4 with mech./hydraulic shift.
V6 with mech./hydraulic shift. Half-moon key impeller.
V4 con cambio meccanico/idráulico.
V6 con cambio meccanico/idráulico. Calattatura girante a mezza luna



Ref.	R.O.
REC5001594	5001594

MOTORES / ENGINES / MOTORI
V4/V6/V8 con eje 20" (1979-06) Chaveta impulsor de plástico
V4/V6/V8 with 20" shaft (1979-06) Plastic wedge key impeller.
V4/V6/V8 con asse da 20" (1979-06) Chiave girante in plastica.



Ref.	R.O.
REC5001595	5001595

MOTORES / ENGINES / MOTORI
(1979-06) V4/V6/V8 con ejes de 25 y 30". Es el mismo kit que el REC5001594 pero con un agujero en el cuerpo de la bomba para refrigeración extra. Chaveta impulsor de plástico.
(1979-06) V4/V6/V8 with 25" and 30" shaft. Same water pump kit as REC5001594 except with a spray hole in pump housing for extra cooling of the long shaft exhaust housings. Plastic wedge key impeller.
(1979-06) V4/V6/V8 con asse da 25 e 30"
Il kit è identico al REC5001594, l'unica differenza è un foro nel corpo pompa che permette una refrigerazione extra..



Ref.	R.O.
REC12104	

MOTORES / ENGINES / MOTORI
V4/V6/V8 (1979+).
Sin cuerpo bomba.
Whithout housing.
Senza corpo pompa.



CONTIENE / CONTAINS / CONTIENE:

REF.	R.O. OEM	Descripción	Description	Descrizione	unds units qnt
REC5001593	435821	IMPULSOR	IMPELLER	GIRANTE	1
REC331107	331107	CHAVETA	KEY	CHIAVE	1
REC338486	338486	TAPA BOMBA	PUMP CUP	COPERCHIO POMPA	1
REC338485	338485	TAPA	WEAR PLATE	COPERCHIO	1
REC338484	338484	JUNTA	GASKET	GUARNIZIONE	1
REC25-30613	310585	ARO	O-RING	O-RING	1
REC331353	331353	RETÉN	SEAL	TENUTA	1
REC320943	320943	GRUESO	CVR. GROMMET	SPESSORE	1
REC314008	314008	GRUESO TUBO	TUBE GROMMET	SPESSORE TUBO	1
REC338893	338893	TAPA	COVER	COPERCHO	1
REC306643	306643	TORNILLOS	SCREWS	VITI	2
REC302325	302325	TORNILLOS	SCREWS	VITI	4
REC332583	332584	ARO	O-RING	O-RING	1
REC321008	321008	GRUESO CAMBIO	SHIFTRO GROMMET	SPESSORE CAMBIO	1

Ref.	R.O.
REC17400-98661	5034323

MOTORES / ENGINES / MOTORI
J4 / J5 / J6 (2005-07)
4 Tiempos / 4 Strokes / 4 Tempi



Ref.	R.O.
REC17400-96403	5031744

MOTORES / ENGINES / MOTORI
E40 / J40
E50 / J50 (2000-02)
4 Tiempos / 4 Strokes / 4 Tempi



Ref.	R.O.
REC17400-93J01	5035036

MOTORES / ENGINES / MOTORI
J200 / J225
BJ200 / BJ225 (2004-06)
4 Tiempos / 4 Strokes / 4 Tempi



Ref.	R.O.
REC17400-87E04	5031731

MOTORES / ENGINES / MOTORI
E70 (1999-00)
4 Tiempos / 4 Strokes / 4 Tempi

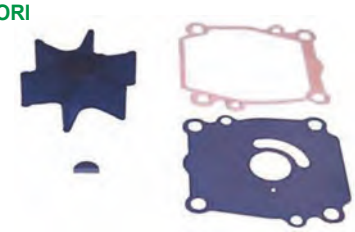

Ref.	R.O.
REC17400-93951	5033106

MOTORES / ENGINES / MOTORI
J10 / J15 (2002-06)
4 Tiempos / 4 Strokes / 4 Tempi



Ref.	R.O.
REC17400-90J20	5033541

MOTORES / ENGINES / MOTORI
J90 / J115 / J140
BJ90 / BJ118 / BJ140
(2003-06)
4 Tiempos / 4 Strokes / 4 Tempi



Ref.	R.O.
REC17400-98652	5030352

MOTORES / ENGINES / MOTORI
E4 / E5
J4 / J5
(1998-04)
2 & 4 Tiempos / 2 & 4 Strokes / 2 & 4 Tempi



JUNTA COLA
DRIVE GASKET
GUARNIZIONI PIEDI

Ref.	R.O.
REC17452-93910	5033110

MOTORES / ENGINES / MOTORI
J10 / J15 (2002-07)
4 Tiempos / 4 Strokes / 4 Tempi

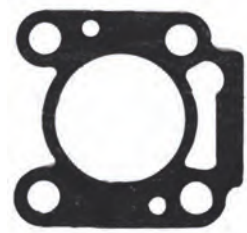

Ref.	R.O.
REC17472-91J00	5033381

MOTORES / ENGINES / MOTOR
J14 / J5 / J6 (2003-07)
4 Tiempos / 4 Strokes / 4 Tempi



Ref.	R.O.
REC17472-93J00	5035042

MOTORES / ENGINES / MOTORI
J200 / J225
BJ200 / BJ225
(2004-06)
4 Tiempos / 4 Strokes / 4 Tempi

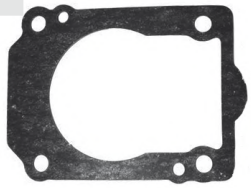

Ref.	R.O.
REC17472-93911	5035603

MOTORES / ENGINES / MOTORI
J10 / J15 (2004-07)
4 Tiempos / 4 Strokes / 4 Tempi



Ref.	R.O.
REC17472-98611	5030190

MOTORES / ENGINES / MOTOR
E5 / J5 (1998)



Ref.	R.O.
REC55122-94400	5031535

MOTORES / ENGINES / MOTORI
J40 / E40 / BJ40
J50 / E50 / BJ50
(1999-06)
4 Tiempos / 4 Strokes / 4 Tempi



CUERPOS BOMBA
WATER PUMP HOUSING
CORPI POMPA

Ref.	R.O.
REC17411-93901	5033107

MOTORES / ENGINES / MOTORI
J10 / J15 (2002-06)
4 Tiempos / 4 Strokes / 4 Tempi



Ref.	R.O.
REC17411-94421	5031990

MOTORES / ENGINES / MOTORI
E25 / E30
J25 / J30
(2002-07)
4 Tiempos / 4 Strokes / 4 Tempi



Ref.	R.O.
REC389577	389577

MOTORES / ENGINES / MOTORI
4 - 8 HP



Ref.	R.O.
REC435390	435390

MOTORES / ENGINES / MOTORI
8, 9.9, 15 HP



Ref.	R.O.
REC393632	393632

MOTORES / ENGINES / MOTORI
20, 25, 35 HP
Con casquillo de bronce. Escape a través de la hélice.
W/ brass bushing. w/ Thru-Prop Exhaust.
Con ghiera in bronzo. Scarico tramite l'elica.



Ref.	R.O.
REC330560	330560

MOTORES / ENGINES / MOTORI
18, 25, 28 HP
Escape a través de aleta de cavitación.
w/ Thru-Cavitation Plate Exhaust.
Scarico tramite aletta di cavitazione.



Ref.	R.O.
REC390613	390613

MOTORES / ENGINES / MOTORI
40 HP 2 Cyl. Crossflow



Ref.	R.O.
REC438544	3438544

MOTORES / ENGINES / MOTORI
2 Cyl. Loopcharged



Ref.	R.O.
REC384087	384087

MOTORES / ENGINES / MOTORI
2 Cyl. Loopcharged



Ref.	R.O.
REC438545	438545

MOTORES / ENGINES / MOTORI
2 Cyl. Loopcharged



Ref.	R.O.
REC438543	438543

MOTORES / ENGINES / MOTORI
2 Cyl. Loopcharged
3 Cyl.



Ref.	R.O.
REC435990	435990

MOTORES / ENGINES / MOTORI
V4, V6 & V8
Con agujero spary
W/ spray hole
Con foro



Ref.	R.O.
REC5007968	435959

MOTORES / ENGINES / MOTORI
V4, V6 & V8



TAPA IMPULSOR
IMPELLER PLATE
PIASTRA GIRANTE

Ref.	R.O.
REC17471-93902	5033114

MOTORES / ENGINES / MOTORI
J10 / J15 (2002-07)
4 Tiempos / 4 Stroke / 4 tempi



Ref.	R.O.
REC17471-94401	5031418

MOTORES / ENGINES / MOTORI
E25 / E30 / E40
J25 / J30 / J40 / J50
BJ40 / BJ50
(1999-07)
4 Tiempos / 4 Stroke / 4 tempi



TAPA BOMBA AGUA
WATER PUMP PLATE
PIASTRA POMPA ACQUA

Ref.	R.O.
REC324641	324641

MOTORES / ENGINES / MOTORI
4-8 HP



Ref.	R.O.
REC324097	324097

MOTORES / ENGINES / MOTORI
8, 9.9, 15 HP



Ref.	R.O.
REC328751	328751

MOTORES / ENGINES / MOTORI
18-35 HP 2 Cyl. Crossflow
3 Cyl.



Ref.	R.O.
REC325397	325397

MOTORES / ENGINES / MOTORI
40 HP 2 Cyl. Crossflow



Ref.	R.O.
REC340619	340619

MOTORES / ENGINES / MOTORI
2 Cyl. Loopcharged
3 Cyl.



Ref.	R.O.
REC320775	320775 + 320776

MOTORES / ENGINES / MOTORI
2 Cyl. Loopcharged

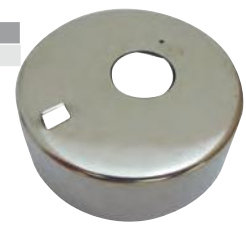

Ref.	R.O.
REC338486	338486

MOTORES / ENGINES / MOTORI
V4, V6 & V8



GUÍA BOMBAS AGUA
WATER PUMP GUIDE
GUIDA POMPA ACQUA

MODELO MODEL MODELLO	AÑO YEAR ANNO	IMPULSOR IMPELLER GIRANTE	TAPA WEAR PLATE COPERCHIO	TAPA BOMBA PUMP CUP COPERCHIO POMPA	CUERPO HOUSING CORPO	KIT SIN CUERPO COMPLET KIT KIT COMPLETO	KIT COMPLETO DRIVESHAFT ASSEMBLY ASSE VERT.
1.5 HP - 15 HP							
1.5	1968-70	REC763735					
2	1971-88	REC763735					
2.5		REC0767407					
3	1952-68	REC434424				REC12108	
3		REC0767407					
3,4	1991-96			REC324641			
4	1969-72	REC434424				REC12108	
4 (90)	1973-80	REC763735					
4 (110)	1973-82	REC434424				REC12108	
4 (90)	1981-90	REC389576		REC324641			
4 Deluxe	1985-88	REC389576	REC324640	REC324641	REC389577	REC396644	REC12065
4 Deluxe	1989-96	REC0767407	REC324640	REC324641			
4.5	1980-84	REC389576	REC324640	REC324641	REC389577	REC396644	REC12065
5	1965-68	REC434424				REC12108	
5	1986-90	REC389576	REC324640	REC324641	REC389577	REC396644	REC12065
5 (4 Tiempos / 4 Stroke / 4 Tempi)	-1998	REC389576	REC324640	REC324641	REC389577	REC396644	REC12065
5.5	1956-64	REC434424					
6	1965-79	REC434424					
6	1984-96	REC389576	REC324640	REC324641	REC389577	REC396644	REC12065
6 (4 Tiempos / 4 Stroke / 4 Tempi)	-1998	REC389576	REC324640	REC324641	REC389577	REC396644	REC12065
7.5	1954-58	REC389576				REC12108	
7.5	1980-83	REC389576	REC324640	REC324641	REC389577	REC396644	REC12065
8	1984-96	REC389576	REC324640	REC324641	REC389577	REC396644	REC12065
8 (4 Tiempos / 4 Stroke / 4 Tempi)	-1995	REC386084	REC318995	REC324097	REC435390		REC394711
9.9 (2 Tiempos / 2 Stroke / 2 Tempi)	1974-96	REC386084	REC318995	REC324097	REC435390		REC394711
9.9 (4 Tiempos / 4 Stroke / 4 Tempi)	1995-01	REC386084	REC318995	REC324097	REC435390		REC394711
10	1956-63	REC775518					
15	1953-56	REC775518					
15 (2 Tiempos / 2 Stroke / 2 Tempi)	1974-96	REC386084	REC318995	REC324097	REC435390		REC394711
15 (4 Tiempos / 4 Stroke / 4 Tempi)	1995-01	REC386084	REC318995	REC324097	REC435390		REC394711
18 - 40 HP 2 Cyl. Crossflow							
18	1957-73	REC775518					
18	1997-98	REC395289	REC765642	REC328751	REC330560		REC395270
20	1966-67	REC775518					
20 a través de hélice / Thru-Prop / attraverso elica	1985-98	REC395289	REC328755	REC328751	REC393632		REC393630
25	1969-78	REC775518					
25	1969-78	REC775518					
25	1979-05	REC395289	REC765642	REC328751	REC330560		REC395270
25 a través de hélice / Thru-Prop / attraverso elica	1985-05	REC395289	REC765642	REC328751	REC393632		REC393630
28	1986-98	REC395289	REC765642	REC328751	REC330560		REC395270
35 con term. / w. Therm. / Con Term.	1958-59	REC777213					
35 a través de hélice / Thru-Prop / attraverso elica	1980-96	REC395289	REC328755	REC328751	REC393632		REC393630
40	1960-70	REC777213					
40	1974-76	CEF500353		REC325397	REC390613		REC391741
40	1981-87	CEF500353		REC325397	REC390613		REC391741
40 - 60 HP 2 Cyl. Loopcharged							
40 Cuerpo corto / Small Housing / Corpo corto	1984-88	REC777214	REC320981	REC320775	REC384087		REC439077
40 Cuerpo corto / Small Housing / Corpo corto	1989-98	REC432941	REC341038	REC340619	REC438544		REC438592
40 Comm. Cuerpo corto / Small Housing / Corpo corto	1993-94	REC777214	REC320981	REC340619	REC438544		REC439077
40 Cuerpo largo / Large Housing / Corpo lungo	1995-05	REC396725	REC341038	REC340619	REC438545		REC5000308
45 Comm. Cuerpo corto / Small Housing / Corpo corto	1986-94	REC777214	REC320981	REC320775	REC384087		REC439077
45 Comm. Cuerpo largo / Large Housing / Corpo lungo	1995-05	REC396725	REC341038	REC340619	REC438545		REC5000308
48 Cuerpo corto / Small Housing / Corpo corto	1987-88	REC777214	REC320981	REC320775	REC384087		REC439077
48 Cuerpo corto / Small Housing / Corpo corto	1989-98	REC432941	REC341038	REC340619	REC438544		REC438592
50 Cuerpo corto / Small Housing / Corpo corto	1971-78	REC777213	REC320981	REC320775	REC384087		REC389133
50 Cuerpo corto / Small Housing / Corpo corto	1979-85	REC777129	REC320981	REC320775	REC384087		
50 Cuerpo corto / Small Housing / Corpo corto	1986-88	REC777214	REC320981	REC320775	REC384087		REC439077
50 Cuerpo corto / Small Housing / Corpo corto	1989-98	REC432941	REC341038	REC340619	REC438544		REC438592
55 Comm. Cuerpo corto / Small Housing / Corpo corto	1986-94	REC777214	REC320981	REC320775	REC384087		REC439077
55 Cuerpo largo / Large Housing / Corpo lungo	1995-05	REC396725	REC341038	REC340619	REC438545		REC5000308

MODELO MODEL MODELLO	AÑO YEAR ANNO	IMPULSOR IMPELLER GIRANTE	TAPA WEAR PLATE COPERCHIO	TAPA BOMBA PUMP CUP COPERCHIO POMPA	CUERPO HOUSING CORPO	KIT SIN CUERPO COMPLET KIT KIT COMPLETO	KIT COMPLETO DRIVESHAFT ASSEMBLY ASSE VERT.
60 Cuerpo corto / Small Housing / Corpo corto	1980-85	REC777129	REC320981	REC320775	REC384087		
60 Cuerpo largo / Large Housing / Corpo lungo	1986-88	REC396725	REC341038	REC340619	REC438543		REC438602
3 Cyl.							
25, 35	1995-01	REC395289	REC328755	REC328751			REC437907
55	1968-69	REC765431					
60	1970-71	REC765431					
60	1989-01	REC396725	REC341038	REC340619	REC438543		REC432955
60 (4 Tiempos / 4 Stroke / 4 Tempi)	1998-Up	REC396725	REC341038	REC340619	REC438543		REC432955
65	1972-73	REC765431					
65	1979-01	REC396725	REC341038	REC340619	REC438543		REC432955
70	1974-78	REC765431	REC341038	REC340619	REC438543		REC438579
70	1979-94	REC396725	REC341038	REC340619	REC438543		REC432955
70 (4 Tiempos / 4 Stroke / 4 Tempi)	1998-Up	REC396725	REC341038	REC340619	REC438543		REC432955
75	1974-78	REC765431	REC341038	REC340619	REC438543		REC438579
75	1979-88	REC396725	REC341038	REC340619	REC438543		REC432955
V4							
85	1969-72	REC385072					
85	1973-77	REC777212					
85 25" Eje / Shaft / Asse	1977	REC777212	REC338485	REC338486	REC435990		REC395073
85	1978	REC777212	REC338485	REC338486	REC435990		REC395073
85	1979-80	REC5001593	REC338485	REC338486	REC435990	REC12104	REC5001594
90	1981-94	REC5001593	REC338485	REC338486	REC435990	REC12104	REC5001594
90 20" Eje / Shaft / Asse	1995-03	REC5001593	REC338485	REC338486	REC435990	REC12104	REC5001594
90 25" Eje / Shaft / Asse	1995-03	REC5001593	REC338485	REC338486	REC5007968	REC12104	REC5001595
100	1971-72	REC385072					
100	1979-80	REC5001593	REC338485	REC338486	REC435990		REC395073
100	1984-97	REC5001593	REC338485	REC338486	REC435990	REC12104	REC5001594
100 20" Eje / Shaft / Asse	1998-05	REC5001593	REC338485	REC338486	REC435990	REC12104	REC5001594
100 25" Eje / Shaft / Asse	1998-05	REC5001593	REC338485	REC338486	REC5007968	REC12104	REC5001595
105	1998-01	REC5001593	REC338485	REC338486	REC5007968	REC12104	REC5001595
115	1973-77	REC777212					
115 25" Eje / Shaft / Asse	1977	REC777212	REC338485	REC338486	REC435990		REC395073
115	1978	REC777212	REC338485	REC338486	REC435990		REC395073
115	1979-94	REC5001593	REC338485	REC338486	REC435990	REC12104	REC5001594
115 20" Eje / Shaft / Asse	1995-06	REC5001593	REC338485	REC338486	REC435990	REC12104	REC5001594
115 25" Eje / Shaft / Asse	1995-06	REC5001593	REC338485	REC338486	REC5007968	REC12104	REC5001595
120 20" Eje / Shaft / Asse	1985-94	REC5001593	REC338485	REC338486	REC435990	REC12104	REC5001594
120 25" Eje / Shaft / Asse	1985-94	REC5001593	REC338485	REC338486	REC5007968	REC12104	REC5001595
125	1971-72	REC385072					
130 20" Eje / Shaft / Asse	1995-98	REC5001593	REC338485	REC338486	REC435990	REC12104	REC5001594
130 25" Eje / Shaft / Asse	1995-98	REC5001593	REC338485	REC338486	REC5007968	REC12104	REC5001595
135	1973-76	REC777212					
135 20" Eje / Shaft / Asse	2000-06	REC5001593	REC338485	REC338486	REC435990	REC12104	REC5001594
135 25" Eje / Shaft / Asse	2000-06	REC5001593	REC338485	REC338486	REC5007968	REC12104	REC5001595
140	1977-78	REC777212	REC338485	REC338486	REC435990		REC395073
140	1979-84	REC5001593	REC338485	REC338486	REC435990	REC12104	REC5001594
140 20" Eje / Shaft / Asse	1985-94	REC5001593	REC338485	REC338486	REC435990	REC12104	REC5001594
140 25" Eje / Shaft / Asse	1985-94	REC5001593	REC338485	REC338486	REC5007968	REC12104	REC5001595
V6							
150	1978	REC777212	REC338485	REC338486	REC435990		REC395073
150	1979-92	REC5001593	REC338485	REC338486	REC435990	REC12104	REC5001594
150 20" Eje / Shaft / Asse	1993-06	REC5001593	REC338485	REC338486	REC435990	REC12104	REC5001594
150 25" Eje / Shaft / Asse	1993-06	REC5001593	REC338485	REC338486	REC5007968	REC12104	REC5001595
175	1977-78	REC777212	REC338485	REC338486	REC435990		REC395073
175	1979-92	REC5001593	REC338485	REC338486	REC435990	REC12104	REC5001594
175 20" Eje / Shaft / Asse	1993-06	REC5001593	REC338485	REC338486	REC435990	REC12104	REC5001594
175 25" Eje / Shaft / Asse	1993-06	REC5001593	REC338485	REC338486	REC5007968	REC12104	REC5001595
185	1984-92	REC5001593	REC338485	REC338486	REC435990	REC12104	REC5001594
185 20" Eje / Shaft / Asse	1993-94	REC5001593	REC338485	REC338486	REC435990	REC12104	REC5001594
185 25" Eje / Shaft / Asse	1993-94	REC5001593	REC338485	REC338486	REC5007968	REC12104	REC5001595
200	1976-78	REC777212	REC338485	REC338486	REC435990		REC395073
200	1979-92	REC5001593	REC338485	REC338486	REC435990	REC12104	REC5001594
200 20" Eje / Shaft / Asse	1993-06	REC5001593	REC338485	REC338486	REC435990	REC12104	REC5001594
200 25" 30" Eje / Shaft / Asse	1993-06	REC5001593	REC338485	REC338486	REC5007968	REC12104	REC5001595
225	1986-92	REC5001593	REC338485	REC338486	REC435990	REC12104	REC5001594
225 20" Eje / Shaft / Asse	1993-06	REC5001593	REC338485	REC338486	REC435990	REC12104	REC5001594
225 25" 30" Eje / Shaft / Asse	1993-06	REC5001593	REC338485	REC338486	REC5007968	REC12104	REC5001595
235	1978	REC777212	REC338485	REC338486	REC435990		REC395073
235	1979-85	REC5001593	REC338485	REC338486	REC435990	REC12104	REC5001594
250 20" Eje / Shaft / Asse	2006	REC5001593	REC338485	REC338486	REC435990	REC12104	REC5001594
250 25" 30" Eje / Shaft / Asse	2006	REC5001593	REC338485	REC338486	REC5007968	REC12104	REC5001595

MODELO MODEL MODELLO	AÑO YEAR ANNO	IMPULSOR IMPELLER GIRANTE	TAPA WEAR PLATE COPERCHIO	TAPA BOMBA PUMP CUP COPERCHIO POMPA	CUERPO HOUSING CORPO	KIT SIN CUERPO COMPLET KIT KIT COMPLETO	KIT COMPLETO DRIVESHAFT ASSEMBLY ASSE VERT.
V8							
250	1991-92	REC5001593	REC338485	REC338486	REC435990	REC12104	REC5001594
250 20" Eje / Shaft / Asse	1993-98	REC5001593	REC338485	REC338486	REC435990	REC12104	REC5001594
250 25" 30" Eje / Shaft / Asse	1993-98	REC5001593	REC338485	REC338486	REC5007968	REC12104	REC5001595
275	1985-88	REC5001593	REC338485	REC338486	REC435990	REC12104	REC5001594
300	1985-92	REC5001593	REC338485	REC338486	REC435990	REC12104	REC5001594
300 20" Eje / Shaft / Asse	1993-95	REC5001593	REC338485	REC338486	REC435990	REC12104	REC5001594
300 25" 30" Eje / Shaft / Asse	1993-95	REC5001593	REC338485	REC338486	REC5007968	REC12104	REC5001595

IMPULSORES
IMPELLER
GIRANTE

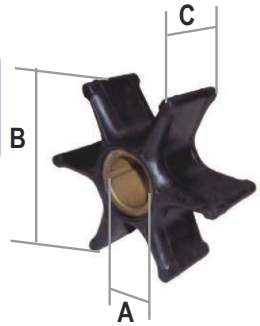

MEDIDAS mm (A-B-C)
MEASUREMENTS mm (A-B-C)
MISURE mm (A-B-C)

Ref.	R.O.	CEF	A	B	C	CHAVETA KEY CHIAVETTA
REC0767407	433935	11,28	11,28	34	17,56	



Ref.	R.O.	CEF	A	B	C	CHAVETA KEY CHIAVETTA
REC386084	386084	**CEF500355**	12,75	38,6	17,6	**REC300611**



Ref.	R.O.	CEF	A	B	C	CHAVETA KEY CHIAVETTA
REC395289	395289	**CEF500370C**	16	51	19	**REC344470**



Ref.	R.O.	CEF	A	B	C	CHAVETA KEY CHIAVETTA
REC765431	382547	**CEF500307**	19,25	91,5	25,4	**REC308928**



Ref.	R.O.	CEF	A	B	C	CHAVETA KEY CHIAVETTA
REC775518	375638	**CEF500351**	12,7	69	12,8	**REC308928**



Ref.	R.O.	CEF	A	B	C	CHAVETA KEY CHIAVETTA
REC396725	396725	**CEF500303C**	19,13	91,5	25,4	**REC331901**
						REC334897



Ref.	R.O.	CEF	A	B	C	CHAVETA KEY CHIAVETTA
REC777213	377230	**CEF500352**	16,04	69,8	22,1	**REC308928**



Ref.	R.O.	CEF	A	B	C	CHAVETA KEY CHIAVETTA
REC385072	385072	**CEF500306**	19,15	89	31,9	**REC308928**



Ref.	R.O.	CEF	A	B	C	CHAVETA KEY CHIAVETTA
REC777212	389642	**CEF500305**	22,32	89	31,9	**REC308928**



Ref.	R.O.	CEF	A	B	C	CHAVETA KEY CHIAVETTA
REC777129	389589	CEF500345	16,04	69,20	22,25	REC300611



Ref.	R.O.	CEF	A	B	C	CHAVETA KEY CHIAVETTA
REC5001593	435821 5001593		22,41	89	31,9	REC331107



Ref.	R.O.	CEF	A	B	C	CHAVETA KEY CHIAVETTA
REC777214	396809	CEF500306C	16,04	70	22,3	REC331901



Ref.	R.O.	CEF	A	B	C	CHAVETA KEY CHIAVETTA
REC432941	432941	CEF500372C	19,13	91,30	25,40	REC334897



Ref.	R.O.	CEF	A	B	C	CHAVETA KEY CHIAVETTA
REC434424	434424	CEF500350	11	69	12,8	REC300611



Ref.	R.O.	CEF	A	B	C	CHAVETA KEY CHIAVETTA
REC389576	389576 436137	CEF500354G	11,2	38,4	17,9	REC300611



Ref.	R.O.	CEF	A	B	C	CHAVETA KEY CHIAVETTA
REC763735	387361	CEF500358	11,2	38,4	17,9	



Ref.	R.O.	CEF	A	B	C	CHAVETA KEY CHIAVETTA
REC390286	390286	CEF500353	17,5	51,5	19	REC308928



CHAVETA
KEY
CHIAVETTA

ACERO INOX.
STAINLESS
ACCIAIO INOX

Ref.	R.O.
REC300611	300611
REC300771	300771



MEDIA LUNA
HALF MOON KEY
MEZZA LUNA

Ref.	R.O.
REC308928	308928

Ref.	R.O.
REC09420-03005	5033113



MOTORES / ENGINES / MOTORI
J10 / J15 (2002-07)
4 Tiempos / 4 Stroke / 4 tempi

PLÁSTICO BLANCO
WHITE PLASTIC
PLASTICA BIANCA

Ref.	R.O.
REC331901	331901
REC344470	330619
REC331107	331107



PLÁSTICO NEGRO
BLACK PLASTIC
PLASTICA NERO

Ref.	R.O.
REC334897	334897



HERRAMIENTAS
TOOLS
ATTREZZI

LLAVE MONTAJE CASQUILLO SUJECCIÓN TUBO DE AGUA
DRIVE SHAFT ADAPTATOR
CHIAVE PER MONTARE LA GHIERA DEL TUBO DELL'ACQUA

Ref.	R.O.
REC314438	



HÉLICES ALUMINO E INOXIDABLES DE 3 Y 4 PALAS
3 & 4 BLADE ALUMINUM & STAINLESS STEEL PROPELLERS
ELICHE ALLUMINIO E INOX DA 3 E 4 PALE

SOLAS

AMITA 3



- Hélices de aluminio de 3 palas con núcleo de goma de gran resistencia.
- 3 blade aluminum propeller with heavy duty rubber hub.
- Eliche di alluminio a 3 pale con mozzi in gomma ad alta resistenza.

SOLAS

AMITA 4



- Hélices de aluminio de 4 palas con núcleo de goma de gran resistencia.
- Van muy suaves a poca velocidad y hace el barco muy manejable con la mar picada.
- 4 Blade aluminum propeller with heavy duty rubber hub.
- Smoother low speed makes the offshore boating activity much easier.
- Eliche di alluminio a 4 pale con mozzo in gomma ad alta resistenza.
- Ideale per le basse velocità, rendono la barca maneggevole anche con il mare mosso.

SOLAS

NEW SATURN PROP



- Hélices de acero inoxidable de 3 palas.
- Ofrece buena aceleración y rendimiento.
- Tamaño más pequeño que ofrece un diámetro extragrande.
- Three blade stainless steel propeller.
- Offers good acceleration & all-round performance.
- Smaller pitch sizes offered in extra large diameter with increased blade area.
- Eliche di acciaio inox a 3 pale.
- Offrono una buona accelerazione e rendimento.
- Dimensioni del passo più piccolo con diametro extra large con una maggiore superficie di pala.

SOLAS

TITAN



- Hélices de acero inox de 3 palas.
- Diseño de pala grande para un área más grande.
- Gran capacidad de transporte de carga.
- Excelente economía de combustible.
- 3 blade stainles steel propeller.
- High camber blade and large blade area design.
- Great load carrying capability.
- Excellent fuel economy.
- Eliche a 3 pale in acciaio inossidabile.
- Ampia capacità di carico.
- Eccellente riduzione consumo del carburante.

SOLAS

HR TITAN 3 PROP



- Hélice de acero inoxidable de 3 palas.
- Alto rendimiento para cascos de alta velocidad.
- La inclinación de la hoja proporciona un excelente elevación de proa y aceleración.
- El diseño de copa grande aumenta la mordida y reduce el deslizamiento.
- Three blade stainless steel propeller.
- Performance prop for high speed planning hulls.
- High rake blade design provides excellent bow lift and acceleration.
- Heavy cup design increases bite and reduces slip.
- Eliche in acciaio inox a 3 pale.
- Alte prestazioni per scafi ad alta velocità.
- Il passo della pala fornisce un'eccellente spinta e accelerazione.
- Il disegno aumenta le prestazioni.

SISTEMA CÓDIGO REFERENCIAS
PART NO. CODING SYSTEM
SISTEMA DI CODICE

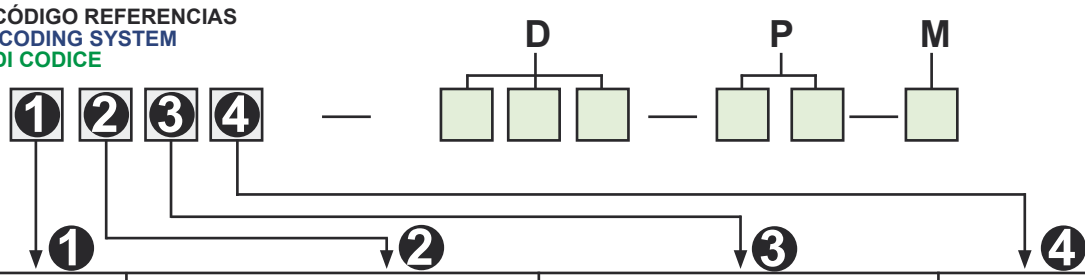

1	2	3	4
1. Mercury, Mariner 2. Johnson, Evinrude 3. Yamaha 4. Suzuki 5. Tohatsu 6. 7. 8. Volvo Penta 9. Rubex System	0.5,6,8 and 9.8 HP Grupo /Group / Gruppo 1. A Grupo /Group / Gruppo 2. B Grupo /Group / Gruppo 3. C Grupo /Group / Gruppo 4. D Grupo /Group / Gruppo 5. E Grupo /Group / Gruppo 6. F Grupo /Group / Gruppo 7. VP (Cubo std./Std. Hub / mozzo std.) 8. VP (Cubo largo /Long Hub / mozzo lungo)	1. Aluminio /Aluminum / Alluminio 2. **Saturn** Acero inox. /S.S. / Acciaio inox. 3. **New Saturn** Acero inox. /S.S. / Acciaio inox. 4. **Titan** Acero inox. /S.S. / Acciaio inox. 5. **HR Titan** Acero inox. /S.S. / Acciaio inox.	1. 3R Rubber Hub 2. 3L Rubber Hub 3. 4R Rubber Hub 4. 4L Rubber Hub

Ejemplo / Note / Esempio

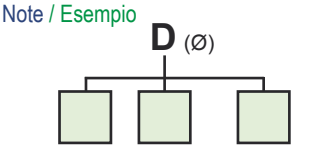

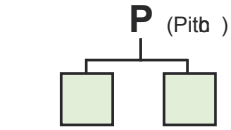



P
1, 2, 5

Pin Drive Propeller
Different Propeller Hub Fitting Spec.

GUÍA DE HÉLICES ALUMINO E INOXIDABLES DE 3 Y 4 PALAS
3 & 4 BLADE ALUMINUM & STAINLESS STEEL PROPELLERS APLICATION
GUIDA ELICHE ALLUMINIO E INOX DA 3 E 4 PALE

JOHNSON EVINRUDE

HP	R.O. OEM	Estrías Tooth spline Scalanature	B	D	P	R	TIPO TYPE	ALUMINIO ALUMINIUM ALLUMINIO		INOX STAINLESS STEEL	
								AMITA 3	AMITA 4	NEW SATURN	HR TITAN 3
2.5, 3.5 HP Pasador plástico Plastic pin drive. Spinotto plastica			3	7 1/4	6	R	PLAST.	**SOL0001-073-06P**			
4, 4.5, 6, 7.5, 8 HP (2 T / Strokes / Tempi) 5, 6 HP (4 T / Strokes / Tempi) Pasador / Pin drive / Spinotto			3 3	8 8,5	7 9	R R	ALUM. ALUM.	**SOL2011-080-07** **SOL2011-085-09**			
9.9 HP (2 & 4 T / Strokes / Tempi) 15 HP (2 & 4 T / Strokes / Tempi) Thru-Hub 8 HP (4 T / Strokes / Tempi)	398126 174938 - 174950 174817	13 13 13 13 13	3 3 - 3 3	10 9 1/4 - 9 9	7 8 9 10 11	R R R R R	ALUM. ALUM. ALUM. ALUM. ALUM.	**SOL2111-093-07** **SOL2111-093-08** **SOL2111-093-09** **SOL2111-093-10** **SOL2111-093-11**			
9.9, 15 HP 4 Tiempos / Strokes / Tempi	5033200 5005383 5005384 5005385 5033203	10 10 10 10 10	3 3 3 3 3	9 1/4 9 1/4 9 1/4 9 1/4 9 1/4	7 8 9 10 11	R R R R R	ALUM. ALUM. ALUM. ALUM. ALUM.	**SOL4111-093-07A** **SOL4111-093-08A** **SOL4111-093-09A** **SOL4111-093-10A** **SOL4111-093-11A**			
20, 25, 35 HP 15, 30 HP (Incluye / Include / incluso E-TEC) Thru-Hub	386317 175190 176424 175191 176425	14 14 14 14 14	3 3 4 4 4	11 10 1/2 10 1/2 10 10 1/4	9 11 12 13 14	R R R R R	ALUM. ALUM. ALUM. ALUM. ALUM.	 **SOL2211-105-11** **SOL2211-103-12** **SOL2211-101-13** **SOL2211-100-14**			
25, 30 HP 4 Tiempos / Strokes / Tempi	5032107 5032108 5032109 5032110	10 10 10 10	3 3 3 3	10 1/2 10 1/4 10 1/4 10 1/4	11 12 13 14	R R R R	ALUM. ALUM. ALUM. ALUM.	**SOL4211-105-11** **SOL4211-103-12** **SOL4211-101-13** **SOL4211-100-14**			
40, 48, 50, 55, 60, 65, 75 HP Thru-Hub	386909 176421 176422	13 13 13 13	3 3 3 3	12 1/2 12 1/2 12 1/4 11 3/4	13 14 15 17	R R R R	ALUM. ALUM. ALUM. ALUM.	**SOL2311-125-13** **SOL2311-125-14** **SOL2311-123-15** **SOL2311-120-17**			
40, 50 HP 4 Tiempos / Strokes / Tempi	5031622 5031623 5031624 5031619 5031620	13 13 13 13 13	3 3 3 3 3	11 1/2 11 1/2 11 5/8 11 1/2 11 3/8	10 11 12 13 14	R R R R R	ALUM. ALUM. ALUM. ALUM. ALUM.	**SOL4311-120-10** **SOL4311-118-11** **SOL4311-116-12** **SOL4311-116-13** **SOL4311-116-14**			
40, 45, 50, 55, 60, 65 HP Comercial 70, 75, 80, 85, 88, 90, 100, 110, 112, 115, 120 ,125 ,130, 135, 140 E-TECH (2 & 4 T / Strokes / Tempi)	382761 391668 391198 176214 176215 176216	13 13 13 13 13 13	3 3 3 3 3 3	14 14 13 3/4 14 14 14	11 13 15 17 19 21	R R R R R R	ALUM. ALUM. ALUM. ALUM. ALUM. ALUM.	**SOL2411-140-11** **SOL2411-138-13** **SOL2411-135-15** **SOL2411-133-17** **SOL2411-130-19** **SOL2411-130-21**	 **SOL2413-133-13** **SOL2413-130-15** **SOL2413-128-17** **SOL2413-125-19** **SOL2413-125-21**	 **SOL2431-135-15** **SOL2431-133-17** **SOL2431-130-19** **SOL2431-130-21**	
	389949 389948 389510 389512	13 13 13 13	3 3 3 3	13 3/4 13 3/8 13 12 3/4	15 17 19 21	R R R R	INOX/SS INOX/SS INOX/SS INOX/SS			**SOL2431-135-15** **SOL2431-133-17** **SOL2431-130-19** **SOL2431-130-21**	

HP	R.O. OEM	Estrías Tooth spline Scalanature	B	D	P	R	TIPO TYPE	ALUMINIO ALUMINIUM ALLUMINIO		INOX STAINLESS STEEL	
								AMITA 3	AMITA 4	NEW SATURN	HR TITAN 3
90, 115, 140 HP 4 Tiempos / Strokes / Tempi 15 Estrías. 15 Tooth spline. 15 Scalanature.	5033322	15	3	13 1/2	15	R	ALUM.		SOL3413-138-15		
	5033323	15	3	14	17	R	ALUM.		SOL3413-138-17		SOL3451-139-17
	5033324	15	3	14	19	R	ALUM.		SOL3413-138-19		SOL3451-139-19
	5033325	15	3	14	21	R	ALUM.		SOL3413-138-21		SOL3451-139-21
	5033326	15	3	14	23	R	ALUM.				SOL3451-139-23
	5033327	15	3	14	18	R	INOX/SS				SOL3451-139-17
	5033955	15	3	14	18	L	INOX/SS				SOL3452-139-17
	5033328	15	3	14	20	R	INOX/SS				SOL3451-139-19
	5033956	15	3	14	20	L	INOX/SS				SOL3452-139-19
	5033329	15	3	14	22	R	INOX/SS				SOL3451-139-21
	5033957	15	3	14	22	L	INOX/SS				SOL3452-139-21
	5033330	15	3	14	24	R	INOX/SS				SOL3451-139-23
90, 100, 115, 130, 150 HP 120-140 / V4 V6 Gear Case 135, 150, 155, 175, 185, 200, 225, 235, 250 2.6 L / V6 E-TEC Non-SX Drive 100-150 Comercial V6 Gear Case 150, 155, 175, 200, 225, 250, 275, 300, 3.6L / V8 Non-SX Drive E-TEC		15			11	R	ALUM.				
	391536	15	3	15 1/2	13	R	ALUM.				
	391535	15	3	15 1/2	15	R	ALUM.	SOL2511-150-15	SOL2513-148-15	SOL2531-145-15	
		15			15	L		SOL2512-150-15	SOL2514-148-15	SOL2532-145-15	
	391200	15	3	15	17	R	ALUM.	SOL2511-148-17	SOL2513-145-17	SOL2531-143-17	
		15			17	L		SOL2512-148-17	SOL2514-145-17	SOL2532-143-17	
	391201	15	3	14 1/2	19	R	ALUM.	SOL2511-145-19	SOL2513-143-19	SOL2531-140-19	
		15			19	L		SOL2512-145-19	SOL2514-143-19	SOL2532-140-19	
	391202	15	3	14 1/2	21	R	ALUM.	SOL2511-143-21	SOL2513-140-21	SOL2531-140-21	
		15			21	L		SOL2512-143-21	SOL2514-140-21	SOL2532-140-21	
	391203	15	3	14 1/2	23	R	ALUM.	SOL2511-142-23		SOL2531-140-23	
		15			23	L				SOL2532-140-23	
	390831	15	3	15 1/2	14	R	INOX/SS				
	174926	15	3	15	15	R	INOX/SS			SOL2531-145-15	
	174927	15	3	15	15	L	INOX/SS			SOL2532-145-15	
	391290	15	3	15	17	R	INOX/SS			SOL2531-143-17	
	431930	15	3	15	17	L	INOX/SS			SOL2532-143-17	
	389924	15	3	14 1/2	19	R	INOX/SS			SOL2531-140-19	
	390821	15	3	14 1/2	19	L	INOX/SS			SOL2532-140-19	
	389923	15	3	14 1/4	21	R	INOX/SS			SOL2531-140-21	
	390822	15	3	14 1/4	21	L	INOX/SS			SOL2532-140-21	
	289019	15	3	14 1/4	23	R	INOX/SS			SOL2531-140-23	
	390823	15	3	14 1/4	23	L	INOX/SS			SOL2532-140-23	
200, 225 HP 4 Tiempos / Strokes / Tempi		15	3	15.8	15	R	ALUM.	SOL4511-150-15			
		15	3	15.8	15	L	ALUM.	SOL4512-158-15			
		15	3	15.5	17	R	ALUM.	SOL4511-155-17			
		15	3	15.5	7	L	ALUM.	SOL4512-155-17			
		15	3	15 3/8	18	R	ALUM.				SOL4571-154-18
		15	3	15 3/8	18	L	ALUM.				SOL4572-154-18
		15	3	15.3	19	R	ALUM.	SOL4511-153-19			
		15	3	15.3	19	L	ALUM.	SOL4512-153-19			
		15	3	15 1/8	20	R	ALUM.				SOL4571-151-20
		15	3	15 1/8	20	L	ALUM.				SOL4572-151-20
		15	3	15.3	21	R	ALUM.	SOL4511-153-21			
		15	3	15.3	21	L	ALUM.	SOL4512-153-21			
		15	3	14 7/8	22	R	ALUM.				SOL4571-149-22
		15	3	14 7/8	22	L	ALUM.				SOL4572-149-22
		15	3	14 3/4	23	R	ALUM.				SOL4571-148-23
		15	3	14 3/4	23	L	ALUM.				SOL4572-148-23

GUÍA DE NÚCLEOS
HUB KIT APLICATION CHAST
GUIDA MOZZI

SOLAS Altas prestaciones / núcleo de goma
Intercambiable con sistemas Flo-Torq & Vorterx System
Disponible en acero inox y aluminio.
SOLAS High performance / Ruber Hub
Interchangeable with Flo-Torq & Vorterx System
Avaliable in stainles Steel & Aluminium Propeller.
SOLAS alte prestazioni / mozzo di gomma.
Intercambiabile con sistema Flo-Torq & Vortex System
Disponible in acciaio inox e alluminio



RUBEX

MODELO MODEL MODELLO	AÑO YEAR ANNO	ESTRÍAS TOOTH SPLINE SCALANATURE	CARCASA GEARCASE CARCASSA	REF. KIT	MODELO HÉLICE PROPELLER TYPE MODELLO ELUCHE
45-75 HP Cola pequeña / Small gearcase / Piede piccolo	(1975+)		3 3/8"	SOLRBX-111	C
45-75 HP Cola larga / Large gearcase / Piede lungo	(1968+)	13		SOLRBX-106	D
85-140 HP Cola larga / Large gearcase / Piede lungo	(1969+)	13	4 1/4"	SOLRBX-106	D
60 & 70 HP (4 tiempos / 4 Stroke / 4 Tempi)	(1998+)	13		SOLRBX-110	D
90, 115 HP (4 tiempos / 4 Stroke / 4 Tempi)	(2003+)	15		SOLRBX-125	D
140 HP (4 tiempos / 4 Stroke / 4 Tempi)	(2003+)	15		SOLRBX-126	D
90, 140 HP Cola larga / Large gearcase / Piede lungo	(1976-90)	15		SOLRBX-101	E
90, 140 HP Cola larga / Large gearcase / Piede lungo	(1991+)	15		SOLRBX-100	E
150-300 HP	(1976-90)	15		SOLRBX-101	E
150-300 HP	(1991+)	15		SOLRBX-100	E

GUÍA HÉLICES ALUMINIO
PROPELLERS ALUMINUM CHART
GUIDA ELICHE ALLUMINIO

Modelo / Model / Modello C 30-75 H.P.
3 PALAS / 3 BLADE / 3 PALE

B	D	P	R	Ref.
3	11.4	12	R	SOL9311-114-12
3	11.1	13	R	SOL9311-111-13

Modelo / Model / Modello D 40-14 H.P.
3 PALAS / 3 BLADE / 3 PALE

B	D	P	R	Ref.
3	14	9	R	SOL9411-140-09
3	14	11	R	SOL9411-140-11
3	13.75	13	R	SOL9411-138-13
3	13.5	15	R	SOL9411-135-15
3	13.25	17	R	SOL9411-133-17
3	13.2	19	R	SOL9411-132-19
3	13.2	21	R	SOL9411-132-21

Modelo / Model / Modello E 135-350 H.P.
3 PALAS / 3 BLADE / 3 PALE

B	D	P	R	Ref.
3	15.5	11	R	SOL9511-155-11
3	16	13	R	SOL9511-160-13
3	15.3	13	R	SOL9511-153-13
3	15	15	R	SOL9511-150-15
3	15	15	L	SOL9511-150-15
3	14.8	17	R	SOL9511-148-17
3	14.8	17	L	SOL9511-148-17
3	14.5	19	R	SOL9511-145-19
3	14.5	19	L	SOL9511-145-19
3	14.3	21	R	SOL9511-143-21
3	14.3	21	L	SOL9511-143-21

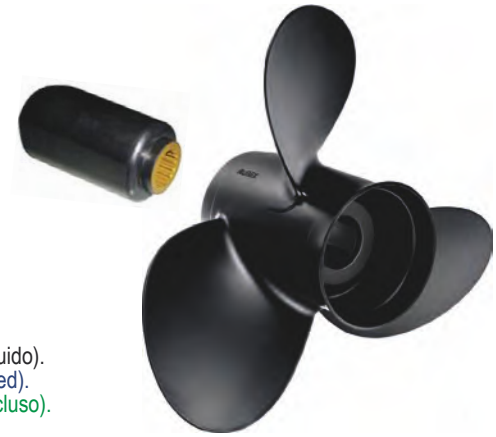

RUBEX

Hélice de aluminio con núcleo intercambiable (no incluido).
Aluminium interchangeable hub propellers (not included).
Eliche in alluminio con mozzo intercambiabile (non incluso).

GUÍA HÉLICES INOX.
STAINLESS STEEL PROPELLERS APLICATION CHART
GUIDA ELICHE INOX

Modelo / Model / Modello D 40-14 H.P.
3 PALAS / 3 BLADE / 3 PALE

B	D	P	R	Ref.
3	13 3/4	13	R	SOL9431-138-13
3	13 3/4	13	L	SOL9432-138-13
3	13 1/2	15	R	SOL9431-135-15
3	13 1/2	15	L	SOL9432-135-15
3	13 1/4	17	R	SOL9431-133-17
3	13 1/4	17	L	SOL9432-133-17
3	13	19	R	SOL9431-130-19
3	13	19	L	SOL9432-130-19
3	13	21	R	SOL9431-130-21

Modelo / Model / Modello E 90-140 H.P.
3 PALAS / 3 BLADE / 3 PALE

B	D	P	R	Ref.
3	14 1/2	15	R	SOL9531-145-15
3	14 1/2	15	L	SOL9532-145-15
3	14 1/4	17	R	SOL9531-143-17
3	14 1/4	17	L	SOL9532-143-17
3	14	19	R	SOL9531-140-19
3	14	19	L	SOL9532-140-19
3	14	21	R	SOL9531-140-21
3	14	21	L	SOL9532-140-21
3	14	23	R	SOL9531-140-23
3	14	23	L	SOL9532-140-23

Modelo / Model / Modello E 135-350 H.P.
3 PALAS / 3 BLADE / 3 PALE

B	D	P	R	Ref.
3	15 3/4	15	R	SOL9571-158-15
3	15 3/4	15	L	SOL9572-158-15
3	15 1/2	17	R	SOL9571-155-17
3	15 1/2	17	L	SOL9572-155-17
3	15 1/4	19	R	SOL9571-153-19
3	15 1/4	19	L	SOL9572-153-19
3	15	21	R	SOL9571-150-21
3	15	21	L	SOL9572-150-21
3	14 3/4	23	R	SOL9571-148-23
3	14 3/4	23	L	SOL9572-148-23

RUBEX



Hélice de acero inox. con núcleo intercambiable (no incluido).
Stainless steel interchangeable hub propellers (not included).
Eliche di acciaio inox con mozzo intercambiabile (nonn incluso).

ÍNDICE / TABLE OF CONTENTS / INDICE

REF-->R.O. / OEM

REF.	R.O. /OEM	PAG
CM123009	173029	267-331
CM123009	123009	267
CM123009A	173029	267
CM123009A	123009	267
CM327606	327606	267
CM327606A	327606	267
CM334451	334451	267
CM334451	432397	267
CM334451A	334451	267
CM334451A	432397	267
CM338635	338635	268
CM338742	338742	269
CM389999	389999	267
CM389999A	389999	267
CM392123	392123	267
CM392123A	392123	267
CM392462	392462	267-339
CM392462A	392462	267
CM393023	393023	267
CM393023	436745	339-341-343-345-347
CM393023A	393023	267
CM397768	397768	267
CM397768A	397768	267
CM398331A	398331	267
CM398873	398873	267-337
CM398873A	398873	267-337
CM431708	431708	267-341-343-345-347
CM431708A		267
CM433458	433458	267
CM433580A		267
CM434029	434029	268
CM5007089	433580	267
CM5007089	5007089	268
CM5007089A		268
CM5031538	5031538	268
CM5031705	5031705	267
CM5032929	5032929	268
CM5032930	5032930	268
CM5033167	5033167	268
CM55125-95500	5031536	268
CM55320-98600	5030267	268
CM55321-87J00	5031705	268
CM55321-93900	5033185	268
CM976669	976669	267
CM976669A	976669	267
CM980756	980756	268
CM980756A		268
CM982438	982438	268
CM982438	982277	268
CM983494	983494	269
CM983494A		269
CM983952A		268
CM984513	984513	269
CM984513A		269
CM984547	983952	268
CM984547	984547	269
CM984547A		269
CMOMC5075KITA		269
CMOMCV4V6KITA		269
CHAJ8C		291
CHAL77JC4		290-291-292
CHAL78YC		291-292
CHAL82C		290-291-292
CHAL87YCC		291
CHAQL16V		291-292
CHAQL77JC4		290-291-292
CHAQL78YC		291-292
CHAQL82C		290-291-292
CHAQL87YC		290-291
CHARA8HC		290-291-292
CHARJ8C		290-291-292
CHAUL77V		290-291-292
CHAUL81C		290-291-292
CHAXC12PEPB		291-292
GLM12370		326
GLM22650		351-352
GLM22650	435123 +336574 +337774 / 914716	344
GS11290		289
GS11291		289
GS11292		289
GS11294		289
GS30435		265
GS31001		265
GS31002		265
GS31021		262
GS31035	5033222	262
GS31036	5033222	262
GS31064		262
GS31065		265
GS31066		265
GS31067		265
GS31068		262
GS31069		262
GS31083	772681	262
GS31084	174508	262
GS31085	176445	262
GS31089	5032150	262
GS31092		262
GS31155		265
GS31156		265
GS31157		265
GS31166		265
LENS3213		263
LENS3240		264
MP28870	585134	289
MP39100	386545	289
MP39760	393301	289
MP39760	508180	289
NGKB7HS		290-291-292
NGKBPR6ES		291-292
NGKBPR6HS		290-291
NGKBPR7HS		291
NGKBPZ8HS-10		291-292
NGKBR6HS		290-291-292
NGKBR6S		290-291-292
NGKBR7HS		290-291-292
NGKBUHW-2		290
NGKBUHXW-1		290-291-292
NGKBUZ8H		291-292
NGKBUZHW-2		292
NGKBZ7HS-10		290-291-292
NGKD6HA		290-291
NGKDCPR7E		290-291-292
NGKDR5HS		291
NGKPZFR6H		291-292
PH130-0006	5040786	273
PH130-0008	384799	275
PH130-0008	391511	275
PH130-0008	396235	275
PH130-0008	397023	275
PH130-0008	584799	275
PH130-0008	586289	275
PH130-0008	586411	275
PH130-0008	586731	275
PH130-0008	586890	275
PH130-0008	586897	275
PH130-0008	586957	275
PH130-0012	393570	274
PH130-0012	585060	274
PH130-0012	586285	274
PH130-0012	778994	274
PH130-0013	584608	273
PH130-0013	586275	273
PH130-0014	86276	274
PH130-0014	386430	274
PH130-0016	585056	274
PH130-0016	586279	274
PH130-0016	583482	274
PH130-0017	583473	274
PH130-0017	585059	274
PH130-0018	432925	275
PH130-0018	586286	275
PH130-0018	586287	275
PH130-0026	584818	274
PH130-0026	778996	274
PH130-0026	586277	274
PH130-0027	584980	274
PH130-0027	586284	274
PH130-0032	438878	274
PH130-0032	586257	274
PH130-0035	586768	274
PH130-0035	587045	274
PH130-0038	277432	273
PH130-0038	278232	273
PH130-0038	378674	273
PH130-0038	379091	273
PH130-0038	379818	273
PH130-0038	380139	273
PH130-0038	380238	273
PH130-0038	381864	273
PH130-0038	385401	273
PH130-0038	386597	273
PH130-0038	386591	273
PH130-0038	392133	273
PH130-0038	585061	273
PH130-0038	586278	273
PH130-0039	387094	275
PH130-0039	395207	275
PH130-0039	585062	275
PH130-0039	586288	275
PH130-0039	777693	275
PH130-0039	778992	275
PH130-0043	383691	274
PH130-0043	384777	274
PH130-0043	386657	274
PH130-0043	391735	274
PH130-0043	585058	274
PH130-0043	585197	274
PH130-0043	586281	274
PH130-0044	385529	274
PH130-0044	386465	274
PH130-0044	389380	274
PH130-0044	389954	274
PH130-0044	391554	274
PH130-0044	585051	274
PH130-0044	585057	274
PH130-0044	585196	274
PH130-0044	586282	274
PH130-0044	586283	274
PH130-0045	387684	274
PH130-0045	389275	274
PH130-0045	585063	274
PH130-0045	586280	274
PH130-0045	778993	274
PH130-0045	384163	274
PH130-0061	5040343	273
PH130-0071	5033799	273
PH130-0077	5036972	273
PH130-0078	5035078	273
PH130-0079	5030780	274
PH200-T004	438786	277
PH200-T004	5005254	277
PH200-T004	439937	277
PH200-T005	434496	277
PH200-T005	438529	277
PH200-T005	438531	277
PH200-T005	5005374	277
PH200-T005	434495	277
PH200-T014	391264	278
PH200-T014	393259	278
PH200-T014	393988	278
PH200-T014	394176	278
PH200-T014	983019	278
PH200-T020	387277	278
PH200-T020	582048	278
PH200-T020	582155	278
PH200-T020	584107	278
PH200-T021	435532	277
PH200-T021	437801	277
PH200-T022	433226	277
PH200-T046	5032670	277
PH200-T061	5005817	277
PH200-T061	5005838	277
PH200-T061	5006319	277
PH200-T062	5032670	277
PH200-T062	5031482	277
PH200-T062	5036081	277
PH200-T072	5005831	277
PH200-T072	5006479	277
PH200-T072	5005822	277
PH200-T072	5005875	277
PH200-WH01		276
PH350-0001	582399	276
PH350-0001	583408	276
PH350-0002	581778	276
PH350-0003	509219	278-279
PH375-0012	380095	275
PH375-0012	383622	275
PH375-0012	389398	275
PH375-0012	389493	275
PH375-0012	395419	275
PH375-0012	582708	275
PH375-0012	586180	275
PH375-0027	586730	275
PH375-0027	586842	275
PH375-0027	778209	275
PH375-0027	980801	275
PH375-0027	981703	275
PH375-0027	982189	275
PH375-0029	98410	275
PH375-0029	584128	275
PH375-0029	778025	275
PH375-0029	892187	275

REF.	R.O. /OEM	PAG
PH375-0029	985063	275
PH375-0030	778021	275
PH375-0030	979774	275
PH375-0033	581528	275
PH375-0033	172869	275
PH375-0033	777699	275
PH375-0047	5031483	276
PH375-0047	5032195	276
PH375-0048	5032197	276
RAC120R-RAC-01		264
RAC23289-10		264
RAC23299-10		264
RAC320R-INOX-01		264
RAC320R-RAC-01		263-264
RAC320R-RAC-02		264
RAC320R-RAC-03		263
RAC490R-RAC-01		264
RACPFF5510		263
RACS3213		263-264
RACS3214	771839	264
RACS3220UL		264
RACS3227	YMM-2E227-00	264
RACS3228UL		264
RACS3240		264
REC0172522		290
REC0172523		290
REC0172525		290
REC0172806		290
REC0175316	585261	283
REC0175316	585262	283
REC0175316	175316	283
REC0175316		285-286
REC0319661	319661	312
REC0319662	319662	363
REC0321479	321479	313
REC0324323	3234323	310
REC0326260	326260	313
REC0326264	326264	310
REC0326877	326877	272
REC0329319	329319	323
REC0330621	330621	307
REC0334665	334665	299
REC0340975	340975	325
REC0340976	340976	325
REC0355911	355911	266
REC0385008	384461	281
REC0385008	385008	281
REC0395204	395204	278-279
REC0395204	395391	278-279
REC0395204	582904	278-279
REC0395911	395911	266
REC0397004	397004	266
REC0398243	398243	266
REC0433325	433325	266
REC0435230	435230	266
REC0435279	435279	329
REC0436367	436367	282
REC0436367	584122	282
REC0439542	439542	266
REC0500581	396161	266
REC0500581	500581	266
REC0502880	581407	287-288
REC0502881	581786	287
REC0502881	502881	287
REC0502881		288
REC0502888	582091	287
REC0502888	582888	287
REC0502888		288
REC0502890	582160	287
REC0502890	584632	287
REC0502890	502890	287
REC0502890		288
REC0554545	554545	333-363
REC0580148	580148	290
REC0580256	580256	290
REC0580290	580290	290
REC0580321	580321	290
REC0581207	581207	290
REC0581419	581419	290
REC0582056	582056	284
REC0582056	581731	284
REC0582056		286
REC0582057	582057	284-286-287
REC0582115	582115	284
REC0582115	583125	284
REC0582115	583143	284
REC0582115		286
REC0582125	582125	283
REC0582125	582454	283
REC0582125	581805	283
REC0582125	582684	283
REC0582125		286-287
REC0582262	5814014	283
REC0582262	582262	283

REF.	R.O. /OEM	PAG
REC0582262	583041	283
REC0582262	583103	283
REC0582262	583336	283
REC0582262		286-287
REC0582382	582382	287-288
REC0582452	582453	283
REC0582452	583380	283
REC0582452		285-286
REC0582508	582508	288
REC0582642	582400	283
REC0582642	582556	283
REC0582642	582642	283
REC0582642	582138	283
REC0582642		286-287
REC0582901	582474	283
REC0582901	582864	283
REC0582901	582901	283
REC0582901		286
REC0583114	583114	284-286-287
REC0583320	583320	284
REC0583320	583122	284
REC0583320		286
REC0583387	583387	281-285-286
REC0583415	584287	280
REC0583415	763765	280
REC0583415		286
REC0583668	583668	280
REC0583668	763785	280
REC0583668	582574	280
REC0583668	583050	280
REC0583668	583274	280
REC0583668		286-287
REC0583670	582847	280
REC0583670	583117	280
REC0583670	583670	280
REC0583670		287
REC0583672	582016	280
REC0583672	582497	280
REC0583672	582867	280
REC0583672	583023	280
REC0583672	583104	280
REC0583672	583671	280
REC0583672	583672	280
REC0583672	581987	280
REC0583672		286-287
REC0583689	583689	278-279
REC0583689	586000	278-279
REC0583689	5844241	278-279
REC0583689	583266	278-279
REC0583724	581957	280
REC0583724	582506	280
REC0583724	582730	280
REC0583724	583119	280
REC0583724	583644	280
REC0583724	583724	280
REC0583724		286
REC0583740	583740	288-289
REC0583748	583748	284-286
REC0583865	583865	282-286-287
REC0584028	584027	283
REC0584028	584028	283
REC0584028	583773	283
REC0584028		286
REC0584035	584035	282
REC0584035	583471	282
REC0584035	584034	282
REC0584035		287
REC0584041	584040	282
REC0584041	584041	282
REC0584041	583489	282
REC0584041		286-287
REC0584288	583561	280
REC0584288	584288	280
REC0584288		286-287
REC0584333	584333	279
REC0584333	583485	279
REC0584477	584477	288
REC0584954	584954	280-285
REC0584985	584985	282
REC0584985	584990	282
REC0584985	584910	282
REC0584985		286-287
REC0584986	584912	282
REC0584986	584989	282
REC0584986	584991	282
REC0584986	584986	282
REC0584986	584988	282
REC0585195	583529	278-279
REC0585195	584204	278-279
REC0585195	585195	278-279
REC0585274	585274	283-286
REC0586271	584641	278-279
REC0586271	585995	278-279
REC0586271	586271	278-279

REF.	R.O. /OEM	PAG
REC0586343	584265	281
REC0586343	584914	281
REC0586343	586343	281
REC0586343		286-287
REC0586661	584637	282
REC0586661	585114	282
REC0586661	586212	282
REC0586661	586661	282
REC0586661	584636	282
REC0586661		287
REC0586667	584036	282
REC0586667	584037	282
REC0586667	586217	282
REC0586667	586667	282
REC0586667	583476	282
REC0586667		287
REC0586695	396077	284
REC0586695	582261	284
REC0586695	582504	284
REC0586695	582714	284
REC0586695	582800	284
REC0586695	582889	284
REC0586695	583172	284
REC0586695	583174	284
REC0586695	583241	284
REC0586695	584508	284
REC0586695	584528	284
REC0586695	584746	284
REC0586695		285-286
REC0586697	396141	283
REC0586697	582281	283
REC0586697	582285	283
REC0586697	582502	283
REC0586697	582757	283
REC0586697	582880	283
REC0586697	583167	283
REC0586697	583168	283
REC0586697	583169	283
REC0586697	583175	283
REC0586697	583604	283
REC0586697		285-286
REC0586798	584783	283-285
REC0763759	584981	280
REC0763759	584109	280
REC0763759		286-287
REC0763760	584849	280
REC0763760	76376	280
REC0763760		286
REC0763763	584560	280
REC0763763	763763	280
REC0763763		285-286
REC0763764	763764	280
REC0763764	583710	280
REC0763764	584292	280
REC0763764		286-287
REC0763765	584287	281
REC0763765	763765	281
REC0763765	583415	281
REC0763765		287
REC0763767	763767	280
REC0763767	583340	280
REC0763767	583536	280
REC0763767		286-287
REC0763769	763769	281
REC0763769	583410	281
REC0763769		286
REC0763770	585087	281
REC0763770	763770	281
REC0763770	581651	281
REC0763770	584755	281
REC0763770		285
REC0763773	763773	281
REC0763773	584804	281
REC0763773		286
REC0763776	582514	281
REC0763776	583045	281
REC0763776	583379	281
REC0763776	763776	281
REC0763776	583289	281
REC0763776		286-287
REC0763779	584643	280
REC0763779	763779	280
REC0763779		287
REC0763782	763773	281
REC0763782	583508	281
REC0763782		286-287
REC0763791	583512	278-279
REC0763791	584205	278-279
REC0763791	585192	278-279
REC0763793	582705	283
REC0763803	584642	282-287
REC0763808	175386	281-285-286
REC0764708	581397	284-285
REC0765386	586098	282

REF.	R.O. /OEM	PAG
REC0765386	586292	282
REC0765386	586015	282
REC0765386		286
REC0767407	433935	369-371
REC09160-20027	5032966	351
REC09160-20041	5032985	351
REC09160-20042	5032967	351
REC09160-20043	5032968	351
REC09160-20044	5032969	351
REC09160-21009	5032970	351
REC09160-26015	5031232	351
REC09282-10008	5030107	315
REC09282-12008	5030108	315
REC09282-12010	5033011	315
REC09282-15008	5036938	315
REC09282-17005	5031264	315
REC09282-17009	5031266	315
REC09283-10003	5030109	315
REC09283-10009	5033339	315
REC09283-20018	5030110	315
REC09283-20045	5030111	315
REC09283-25076	5033481	315
REC09289-17006	5033015	315
REC09289-20009	5031893	315
REC09289-22007	5031270	315
REC09420-03005	5033113	372
REC10-79953Q04	307551	330-331-333-335-339-341-349
REC11-35921	314730	343-345-347-349
REC11141-90J01	5033639	301-304
REC11141-92J01	5034644	301-304
REC11141-93E20	5033046	301-304
REC11141-93J10	5036629	301-304
REC11141-95J00	5036802	301-304
REC11141-97J02	5037490	301-304
REC11142-93J10	5035971	301-304
REC11489-90J00	5033649	309
REC11489-93E11	5034462	309
REC11489-93J00	5034878	309
REC115742	115742	284-285
REC12-191833	307552	330-331
REC12-191833	311598	341
REC12065		364-369
REC12104		366-370-371
REC12108		369
REC125017	302540	363
REC126776	126776	325
REC126870	126870	345-347
REC126870	3852020	355
REC126870		353-355-356
REC127084	127084	341-343-353-355-356
REC12778-93J00	5034916	314
REC13119-93J00	5034959	314
REC13122-95J00	5036852	314
REC13260		322
REC13270		322-326
REC13280		322
REC13290		322
REC13310		322
REC13350		322-326
REC13450		322-326
REC13910-89J01	5032424	316-317
REC1397-2150	910139	266
REC1397-2150	983870	266
REC1399-07350	397839	318
REC1399-07351	438562	318
REC1399-07352	438556	318
REC1399-07353	438555	318
REC14151-93J00	5034978	310
REC14152-93J00	5034979	310
REC14212-93J00	5034982	310
REC15-101		293
REC15-102		293
REC15-103		293
REC15-104		293
REC15170-91J00	5033372	319-320
REC15170-94J00	5037584	319-320
REC15170-98110	5030181	319-320
REC15170-99E00	5030699	319-320
REC15410-87J00	5031400	266
REC15410-87J10	5032323	265
REC15410-87J30	5035974	265
REC15410-98500	5032238	265
REC15440-93J00	5034985	266
REC15626-90J00	5033706	318
REC15626-99E00	5031114	318
REC160084	160084	339-345-347
REC16433-93J00	5035022	314
REC16510-05240	5033102,7	266
REC16510-82703	778887	266
REC16510-82703	5033919	266
REC16510-87J00	778885	266
REC16510-87J00	5031411	266
REC16510-90J00	5033539	266
REC16510-90J00	778886	266
REC16510-93J00	778888	266
REC16510-93J00	5035703	266
REC173944	172588	278
REC173944	173944	278
REC17400-87E04	5031731	366
REC17400-90J20	5033541	366
REC17400-93951	5033106	366
REC17400-93J01	5035036	366
REC17400-96403	5031744	366
REC17400-98652	5030352	366
REC17400-98661	5034323	366
REC17411-93901	5033107	367
REC17411-94421	5031990	367
REC17452-93910	5033110	366
REC17471-93902	5033114	368
REC17471-94401	5031418	368
REC17472-91J00	5033381	366
REC17472-93911	5035603	367
REC17472-93J00	5035042	367
REC17472-98611	5030190	367
REC175266	175266	354-355-356
REC175267	175267	354-355-356
REC175268	175268	355-356
REC175269	175269	355
REC17693-95J00	5036914	314
REC18-32665	302804	354
REC18-4329		300
REC18-4330		300
REC18-4331		300
REC18-4332		300
REC18-6865	5005114	278
REC18-7044		318
REC18-7761		316-317
REC18-8355		300
REC203130	203130	302-303
REC21-20553	305981	349
REC22-67892A05	318544	330-337-341-343-345-347
REC22186		354-255
REC22660	397627 + 345992 + 332491	336-350-351
REC22670	397338 + 318304 + 318303	340-350-351
REC23311-95DL0	5031449	354
REC24942		263
REC24950		263
REC24952		263
REC25-25439	3852565	363
REC25-30224	310327	337
REC25-30613	310585	349-363-366
REC25-30613	310967	363
REC25-33145	302337	363
REC25-35027	303360	363
REC25-48171	202893	363
REC25-62702	303191	363
REC25-62705	311338	333-363
REC25000		262
REC25010		262
REC25020		262
REC25030		262
REC25700-88L00	5031456	358
REC25700-90J01	5033798	358
REC25700-92J00	5033922	358
REC25700-93J00	5035077	358
REC25700-95D01	5036040	358
REC25700-95D01	5032167	358
REC25700-95J00	5037038	358
REC25700-99E00	5034776	358
REC26-01674	332583	333
REC26-69188	321453	333-349-361-362-363
REC26-76868	320862	345-349-361-362-363
REC27-62386001	310058	321-322-323
REC300-01633	330525	273
REC300-01744	203698	273
REC300-03585	586075	278-279
REC300-03586	586048	278-279
REC300-03587	585001	278-279
REC300-03588	584890	278-279
REC300-08010	439561	278-279
REC300-26084	583663	284
REC300-26084	583667	284
REC300-26084	584488	284
REC300-26084		285
REC300-26085	583896	284
REC300-26085	584329	284
REC300-26085	584331	284
REC300-26085	584489	284
REC300-26085		285-286
REC300611	300611	331-371-372
REC300771	300771	372
REC301877	301877	331-333-363
REC301967	301967	320-335-363
REC302035	302035	343-345-347
REC302325	302325	331-337-339-341-343-345-347-366
REC302325	302873	349
REC302325	324960	335
REC302497	302497	330-331-333-335
REC302537	302537	363
REC302564	302564	361-362
REC302588	302588	339-363
REC303345	303345	361-362
REC303347	303347	333-363
REC303615	303615	319
REC304174	304174	363
REC304454	304454	331-333
REC304784	304784	312
REC305123	305123	345-349-363
REC305176	305176	311
REC305185	305185	266-318
REC305242	305242	330-363
REC305282	305282	337-339
REC305586	305586	324
REC305762	305762	339
REC306376	306376	337
REC306643	306643	321-331-342-345-347-349-366
REC307069	307069	302-303
REC307133	307133	312
REC307161	307161	343-347
REC308239	308239	266-318
REC308328	308328	324
REC308627	308627	331
REC308876	308876	363
REC308928	308928	339-341-349-371-372
REC309004	309004	335
REC309243	309243	337
REC309731	309731	363
REC309955	309955	349-354
REC309989	309989	361
REC31-02747	330854	297-298
REC31-02748	382481	297-298
REC31-02798	389613	297-298
REC31-02799	393896	297-298
REC31-02803	385503	297-299
REC31-02806	390641	297-299
REC31-17514A2	437088	297
REC31-32575T1	385175	339-359-360
REC310414	310414	363
REC310433	310433	297-298-299
REC310584	310584	337-363
REC310599	310599	361-362
REC310649	310649	361
REC311145	311145	324
REC311538	311538	343-345-347
REC313175	313175	363
REC313282	313282	361-362
REC313284	313284	361-362
REC313339	313339	337-339-341
REC313340	313340	363
REC313353	313353	361
REC313445	313445	341
REC313447	313447	341
REC313447		360
REC313448	313448	341-343-345-347-349
REC313715	313715	341-345-347-349
REC313754	313754	341-363
REC313763	313715	343
REC313763	313763	308
REC313782	313782	301
REC313782		303
REC314008	314008	341-342-345-347-349-366
REC314082	314082	339-341
REC314115	314115	314
REC314167	314167	361-362
REC314438		372
REC314491	314491	363
REC314502	314502	337-339-341-343-354-355-356
REC314503	314503	337-339-341-343-354-355-356
REC314728	314728	343-345-347-349-363
REC314731	314731	343-345-349
REC314731		360-361

REF.	R.O. /OEM	PAG
REC314745	314745	343-345-347-349
REC315232	315232	318
REC315538	315538	311
REC315578	315578	313
REC315788	315788	339
REC315810	315810	337-339-341-343-355-356
REC315837	315837	339
REC315838	315838	339
REC315868	315868	310
REC315869	315869	310
REC316506	316506	331-333-337-349
REC316563	316563	349
REC317230	317230	341
REC317230		360
REC317232	317232	341
REC317245	317245	321-322-325-326
REC317624	317624	337-343-344-347
REC317914	317914	310
REC317955	317955	310
REC318303	318303	341-350-351
REC318335	318335	311
REC318358	318358	302-303
REC318372	318372	337-339-341-342-345-347-349-363
REC318373	318373	308-321
REC318395	318395	321-322-325-326
REC318717	318717	363
REC318917	318917	324
REC318924	318924	313
REC318925	318925	310
REC318932	318932	312
REC318971	318971	331-354-355
REC318972	318972	331-361-362
REC318995	318995	331-369
REC319085	319085	331
REC319174	319174	313
REC319276	319276	341
REC319332	319332	312
REC319348	319348	307
REC319586	319586	341
REC319633	319633	302-303
REC319665	319665	311
REC319710	319710	307
REC319890	319890	355-356
REC319891	319891	333-354-355-356
REC319895	319895	339-351
REC320041	320041	333-339-341
REC320140	320140	349-341-343
REC320166	320166	339
REC320167	320167	339
REC320168	320168	339
REC320305	320305	337-339-353-355
REC320310	320310	337-339
REC320311	320311	337-339
REC320570	320570	345-347-349-355-356
REC320635	320635	349-352
REC320679	320679	314
REC320775	320775 + 320776	339-368-369-370
REC320785	320785	333-354-355-356
REC320880	320880	321-322-325-326
REC320936	320936	309-343-345-347
REC320943	320943	342-345-347-349-366
REC320961	320961	309-343-344-345
REC320981	320981	339-369-370
REC321008	321008	343-345-347-366
REC321027	321027	321-322-325-326
REC321120	321120	321
REC321182	321182	311
REC321184	321184	321-322-324
REC321220	321220	322-325-326
REC321221	321221	321-322-325-326
REC321222	321222	321-322-325-326
REC321459	321459	335-361
REC321459		362
REC321459		362
REC321466	321466	361-362-363
REC321466		362

REF.	R.O. /OEM	PAG
REC321467	321467	300-337-339-361-362-363
REC321480	321480	331-361-362
REC321481	321481	331-361
REC321481	334950	361
REC321481		362
REC321497	321497	314
REC321692	321692	321-322-325-326
REC321722	3214722	315
REC321738	321738	331-333
REC321786	321786	361-362
REC321787	321787	335-361-362
REC321788	321788	300-361-362
REC321794	3214794	315
REC321831	321831	300-361
REC321886	321886	325
REC321895	321895	300-361-362
REC321921	321921	335
REC321928	321928	333-361-362
REC321932	321932	321-322-323
REC322494	322494	330
REC322938	322938	345-347
REC322941	322941	343-345
REC323214	323214	308
REC323338	323338	314
REC323361	323361	343-345-347
REC323362	323362	343-345-347
REC323469	323469	311
REC323582	323582	323
REC323664	323664	343-350
REC323664	331880	343
REC323664		351-352
REC323889	323889	341
REC323890	323890	341
REC323942	323942	331-355-356
REC323943	323943	333-355-356
REC324097	324097	331-368-369
REC324334	324334	331
REC324369	324369	341-343-345-347-349
REC324449	324449	335
REC324639	324639	330-361-362-363
REC324640	324640	330-369
REC324641	324641	330-368-369
REC324670	324670	343-345-347
REC324717	324717	307
REC324766	324766	341-343-360-361
REC324852	324852	337-347
REC324937	324937	309-339-341
REC324981	324981	337-341
REC325040	325040	330
REC325092	325092	312
REC325211	325211	310
REC325260	325260	313
REC325397	325397	368-369
REC325537	325537	333
REC325721	325721	307
REC326649	326649	363
REC326649	329380	363
REC326649	909047	363
REC326741	326741	363
REC326849	326849	347
REC326926	326926	312
REC327031	327031	361-362
REC327345	327345	341-343
REC327656	327656	343-345-347-349
REC327656		360-361
REC327669	327669	345-347
REC327669		360-361
REC327674	327674	311
REC327707	327707	312
REC32800-95D01	5030356	278-279
REC32800-95D01		285
REC328096	328096	339-341-345
REC328522	328522	331-355
REC328522	552906	354
REC328522		355-356
REC328590	328590	308
REC328618	328618	308
REC328622	328622	313
REC328623	328623	302-303
REC328694	328694	337
REC328702	328702	343-345-347
REC328725	328725	330
REC328743	328743	343
REC328744	328744	330-337
REC328751	328751	333-335-368-369-370
REC328753	328753	333
REC328754	328754	333
REC328755	328755	333

REF.	R.O. /OEM	PAG
REC328755		369-370
REC328825	328825	344
REC329076	329076	324
REC329103	329103	302-303
REC329390	329390	335
REC329419	329419	301-303
REC329718	329718	313
REC329826	329826	309
REC329828	329828	307
REC329830	329830	321-324
REC329836		303
REC329920	329920	311
REC329922	329922	361-362-363
REC329923	329923	361-362-363
REC329975	329975	308
REC330137	330137	300-301-341-343-361-362-363
REC330265	330265	337-343-345-347
REC330273	330273	325-326
REC330327	330327	300-335-361-362-363
REC330560	330560	335-367-369
REC330689	330698	314
REC330818	330818	301-303
REC330909	330909	314
REC331016	331016	309
REC331103	331103	361
REC331107	331107	343-347-366-372
REC331188	321175	349
REC331188	331188	322-337-343-345-347
REC331211		303
REC331353	331353	343-345-347-349-366
REC331532	331532	313
REC331880	331880	341-344-347
REC331901	331901	339-341-371-372
REC331916	331916	310
REC331917	331917	310
REC331980	324430	339
REC331980	331980	330-339
REC331999	331999	343-345-347
REC332108	332108	322-324
REC332130	332130	323
REC332261	332261	333-361-362
REC332266	332266	312
REC332319	332319	311
REC332369	332369	321-322-324
REC332491	332491	337-350-351
REC332514	332514	337-359-360
REC332583	305739	363
REC332583	317178	363
REC332583	332583	363
REC332583	332584	363-366
REC332584	332584	337-339-347
REC332816	332816	302-303
REC332817	332817	302-303
REC332818	332818	303
REC332819	332819	302-303
REC332944	332944	322-324
REC333008	333008	315
REC333572	333572	335-363
REC333670	33367	303
REC333670	334726	303
REC333670		303
REC333725	333725	337
REC333725		359-360
REC333758	333758	337
REC333771	333771	337
REC333771	342786	339
REC333771		359-360
REC333879	333879	308
REC333957	333957	343-345-347
REC33410-94400-000	5032732	288
REC334163	334163	339-341-343-345-347
REC334590	334590	331-355-356
REC334897	334897	337-341-372
REC334950	334950	345-347
REC335334	335334	319
REC335359	327795	301
REC335359	335359	301
REC335359		303
REC335361	325647	302
REC335361	335361	302
REC335361		303
REC335403	335403	312
REC335404	335404	312
REC335419	335419	308
REC335523	335523	363
REC335633	335633	313

REF.	R.O. /OEM	PAG
REC335679	335679	352
REC335818	335818	312
REC335819	335819	312
REC335981	335981	323
REC336178	336178	321-325
REC336185	336185	320-321-325
REC336226	336226	313
REC336227	336227	314
REC336289	336389	313
REC336308	336308	309
REC336388	336388	313
REC336493	336493	330
REC336530	336530	337-341
REC336947	336947	324
REC336982	336982	337
REC337061	337061	343-344-347
REC337067	337067	325
REC337068	337068	324
REC337533	337533	325
REC337774	320630	349
REC337774	337774	345-347-350
REC337774	914716	350
REC337774		351-352
REC337778	337778	343-344
REC338222	338222	302-303
REC338484	338484	343-345-347-349-366
REC338485	321188	349
REC338485	338485	345-347-366-370-371
REC338486	338486	345-347-349-366-368-370-371
REC338504	338504	343-345-347
REC338518	313893	363
REC338518	338518	333-363
REC338522	338522	363
REC338632	338632	322-324
REC338636	338636	342-347
REC338876	338876	319
REC338879	338879	319
REC338882	338882	314
REC338893	338893	342-345-347-349-366
REC339044	339044	322-323
REC339543	303059	339
REC339543	303059	363
REC339543	339543	363
REC339620	339620	361-301
REC340115	340115	302-303
REC340116	333554	303
REC340116	340116	303
REC340116		303
REC340559	34559	300
REC340559	340559	300
REC340559	778417	300
REC340619	340619	337-341-368-369-370
REC340811	340811	333
REC341038	341038	337-341-369-370
REC341219	341219	343-347
REC341220	341220	343-345-347
REC341280	341280	343-344-347-361
REC341281	314281	361
REC341281	341281	345-347
REC341732	341732	337-339-341
REC342513	342513	308-321
REC342786	321466	339
REC342786	332205	339
REC342786	332205	361
REC342786	342786	337-341-361-362
REC343105	343105	322-325
REC343105	3343105	322
REC343141	343141	321-324
REC343853	343853	308
REC343863	343863	310
REC344386	344386	308
REC344470	330619	335-372
REC344470	344470	333-339-371
REC344771	344771	324
REC345257	345257	303
REC345905	345905	345-352
REC346006	346006	352
REC349193	349193	347
REC349193		361
REC35-49088A2	312456	265
REC35-53336	908034	266
REC35-802893Q		263
REC35-802893Q01		263
REC350038	350038	347
REC350271	350271	343-345-347
REC350357	342291	311

REF.	R.O. /OEM	PAG
REC351018	351018	307
REC351019	351019	309
REC352960	320499	297-299
REC353076	332942	361-301
REC354580	338601	342-347
REC356900	347371	347-352
REC377139	377139	296-298-299
REC37820-92E03	5031481	289
REC378252	378252	296-298-299
REC37830-89E03	5030225	289
REC37830-89E03	5032047	289
REC378444	378444	275
REC378444	777700	275
REC379504	379504	341-343-360-361
REC38100-87J00	5031482	277
REC38100-96J00	5035513	277
REC38100-96J00	5033838	277
REC38100-96J00	5034526	277
REC38100-96J00	5034627	277
REC38100-96J00	5035113	277
REC382343	382343	337-341-359-360
REC382363	382363	316
REC382407	382407	337-341-343-345-347-359-360-361
REC382408	382408	341-343-345-349-360-361
REC384087	384087	339-367-369-370
REC384195	384195	343-360-361
REC385043	385043	341-343-360-361
REC385068	385068	341-360
REC385072	385072	370-371
REC385087	385087	341
REC3852045	303067	363
REC3852045	329381	363
REC3852045	332584	341
REC3852056	306394	330-345-347-354-355-356
REC3852120	313416	322-323
REC3852548	911785	361
REC3852548	3852548	361
REC3852928	305270	363
REC3852928	913921	337
REC3853655	916058	361
REC3855081	311598	333-335-337-339-343-345-347
REC3857533	581295	276
REC3857533	582472	276
REC3857533	582473	276
REC3857533	584416	276
REC3857533	586147	276
REC3857533	586224	276
REC386084	386084	331-369-371
REC386280	386280	294
REC386573	319771	315
REC386573	386573	315
REC386764	386764	337-339-359-360
REC386765	386765	337-339-359-360
REC386766	386766	339-359-360
REC386866	386866	354-355
REC386918	386279	294
REC387247	387247	345-349-360-361
REC387262	379312	317
REC387262	387262	317
REC387262		317
REC387656	387656	343-345-347-349-360-361
REC387787	387787	297-299
REC387817	387817	344-347-349-360-361
REC388344	388344	297-298-299
REC389039	389039	344-347-360-361
REC389042	389042	345-347360-361
REC389133	389133	364
REC389455	389455	344
REC389576	389576	372
REC389576	436137	330
REC389576	436137	372
REC389576		369
REC389577	389577	330
REC389577	389577	367
REC389577		369
REC390286	390286	372
REC390509	390509	294
REC390510	390510	294
REC390613	390613	367-369
REC390900	390900	296-298-299

REF.	R.O. /OEM	PAG
REC391170	391170	294-295
REC391416	391416	294-295
REC391741	391741	365-369
REC391988	391988	306-307
REC393088	393088	319-320
REC393103	393103	319-320
REC393561	393561	311
REC393630	393630	332
REC393630	393630	364
REC393630		369
REC393632	393632	333
REC393632	393632	367
REC393632		369
REC39390	398047	305
REC39390	438904	305
REC39390		307
REC394408	394408	325-326
REC394411	394411	323
REC394462	394462	300
REC394711	394711	364-369
REC394930	394930	294-295
REC395073	395073	365-370
REC395209	395209	345-353
REC395270	395270	364-369
REC395289	395289	333-335-369*-370-371
REC395401	395401	296-298
REC395627	395627	297-298-299
REC395861	395861	300
REC396350	396350	357-359
REC396351	396351	332-357-359
REC396352		359
REC396355	396355	357-359
REC396377	396377	294-295
REC396379	396379	294-295
REC396504	396504	294-295
REC396520	396520	317
REC396521	378895	317
REC396521	396521	317
REC396521	678882	317
REC396521		317
REC396522	379312	317
REC396522	396522	317
REC396522		317
REC396644		369
REC396701	392061	316
REC396701	396701	316
REC396701	398729	316
REC396701		317
REC396725	396725	341-369-370-371
REC396750	396750	305-307
REC396987	396987	322-323-326
REC397537	397537	337-359-360
REC397538	397538	337-359-360
REC398042	398042	345-347-355-356
REC398172	398172	306-307
REC398514	398514	319-320
REC398529	398529	296-298-299
REC398693	398693	306-307
REC398874	398874	337
REC398901	398901	337-359-360
REC40135	398319	265
REC40135	398327	265
REC40145		265
REC40155		265
REC40165		265
REC40970		289
REC40990		289
REC414153	434153	354-355
REC431870	431870	295
REC43211-87JL0	5032058	354
REC432264	432264	337-359-360
REC432276	432276	337
REC432570	432570	305-307
REC432941	432941	337-369-372
REC432955	432955	365-370
REC432962	432962	319-320
REC433190	433190	265
REC433190	765553	265
REC433550	433550	357-359
REC433570	433570	339-351
REC434137	434137	323
REC434381	394885	305
REC434381	434381	305
REC434381		307
REC434391	434391	341
REC434424	434424	369-372
REC434467	434467	345-360-361
REC434588	434588	337
REC434839	434839	266
REC434844	434844	297-299
REC435027	435027	343

REF.	R.O. /OEM	PAG
REC435123	336565	345
REC435123	435123	345-350
REC435123		351-352
REC435274	435274	337
REC435390	435390	331-367-369
REC435491	435491	322-323
REC435519	435519	341
REC435546	5006655	294
REC435548	983446	277
REC435548	435548	277
REC435548	985237	277
REC435597		322
REC435957	321692	325
REC435957	435957	321
REC435990	435959	347
REC435990	435990	342-345-368
REC435990		370-371
REC436254	436254	295
REC436353	436353	295-296
REC436358	436358	304-307
REC436888	436888	353
REC436891	432571	306
REC436891	436891	306
REC436891		307
REC436972	436972	295
REC437090	437090	322-323
REC43713		357
REC437155	437155	306-307
REC437288	437288	333
REC437330	437330	343-345-347
REC437725	437725	306-307
REC437907	437909	365-370
REC438543	438543	341-368-370
REC438544	438544	337-367-369
REC438545	438545	337-368-369
REC438559	765591	318
REC438559	438559	318
REC438579	438579	365-370
REC438592	438592	364-369
REC438602	438602	365-370
REC438616	438616	319-320
REC438996	435442	316
REC438996	438996	316
REC438996		317
REC439071	382049	316
REC439071	383052	316
REC439071	383067	316
REC439071	398532	316
REC439071	439071	316
REC439071		317
REC439072	391305	316
REC439072	398452	316
REC439072	398453	316
REC439072	439072	316
REC439072		317
REC439074	4359073	316-317
REC439075	439075	316
REC439075	439074	316
REC439075		317
REC439076	392550	316
REC439076	398526	316
REC439076	434888	316
REC439076	435443	316
REC439076	439076	316
REC439076		317
REC439077	439077	364-369
REC439078	43577	316
REC439078	435678	316
REC439078	435752	316
REC439078	439078	316
REC439078	435676	316
REC439083	393433	304
REC439083	439083	304
REC439083		307
REC439084	385416	304
REC439084	390078	304
REC439084		307
REC439085	389556	305
REC439085	391300	305
REC439085	439085	305
REC439085		307
REC439138	439138	337-353
REC439185	439185	341-353
REC439476	439476	343-344-347-349
REC439559	439559	306-307
REC439973	439973	329-344
REC5000074	5000074	345
REC5000308	5000308	364-369
REC5000309	5000309	357-359
REC5000400	5000400	305-307
REC5000611	584504	279
REC5000611	584840	279
REC5000611	585073	279
REC5000611	581670	279
REC5000611		285-286
REC5000614	5000614	347-353
REC5000615	5000615	343-345-353
REC5000618	5000618	353
REC5000624	5000624	347-353
REC5000626	5000626	353
REC5001036	5001036	323
REC5001344	584767	284
REC5001344	584768	284
REC5001344	584908	284
REC5001344	585074	284
REC5001344		285-286
REC5001593	435821	343-366
REC5001593	435821	372
REC5001593	5001593	345-347-370-371-372
REC5001594	5001594	365-370-371
REC5001595	5001595	365-370-371
REC5004218	910994	345
REC5004218	5004218	350
REC5004218		352
REC5004257	5004257	345
REC5004532	585145	282
REC5004532	585189	282
REC5004532	5004533	282
REC5004532	584808	282
REC5004532		285-286
REC5004705	394488	300
REC5004765	5004765	345-347-353
REC5005034	5005034	354-355
REC5005801	175974	289
REC5005801	5005801	289
REC5005907	5005907	304-307
REC5005931	5005931	305-307
REC5006241	5006241	343-345-347
REC5006373	5006373	357-359
REC5006657	5006657	294
REC5006658	5006658	294
REC5006662	5006662	294
REC5006664	5006664	294
REC5006665	5006665	294
REC5006666	5006666	295
REC5006668	5006668	294
REC5006669	5006669	294
REC5006670	5006670	294
REC5006687	5006687	295
REC5006688	5006688	295
REC5006694	5006694	295
REC5006696	5006695	295
REC5006701	5006701	295
REC5006702	5006702	295
REC5006707	5006707	295
REC5006711	5006711	295
REC5006713	5006713	295
REC5006714	5006714	295
REC5006716	5006716	295
REC5006727	5006727	296
REC5006728	5006728	296
REC5006730	5006730	296
REC5006751	5006751	295
REC5007022	438048	329
REC5007022	439972	329-344
REC5007129	5007129	306-307
REC5007190	387041	296-297-299
REC5007335	5005266	265
REC5007335	5007326	265
REC5007672	5000623	347-353
REC5007850	5007850	305-307
REC5007968	435959	343-345-349-368-370-371
REC5008966	320569	349-356
REC51123-93J00	5035133	314
REC51142-93J00	5035135	308
REC51211-90J10	5034757	308
REC51211-93J00	5035138	309
REC55122-94400	5031535	367
REC553126	553126	337-363
REC57100-93902	5033188	353
REC57311-93910	5033190	350
REC57311-96311	5032098	350
REC57510-89J00	5032698	350
REC57510-93910	5033191	350
REC57521-93910	5033192	350
REC57521-96312	5032100	350
REC57610-93901	5033193	353
REC57621-94403	5036059	350
REC57630-92E00	5035460	354
REC57630-94300	5031548	354
REC57630-94500	5030976	354
REC57630-96300	5032170	354
REC581528	777699	276
REC581528	172869	276
REC581528	581528	276
REC581726	581726	284
REC584030	583777	283
REC584030	584029	283
REC584030	584030	283
REC584030		286
REC584561	583737	289
REC584561	582366	289
REC584561	584561	289
REC584561		288
REC584580	584580	275
REC586774	5009214	276
REC586774	586774	276
REC63P-13907-03	5030700	318
REC63P-13907-03	5033702	318
REC63P-13907-03	5036635	318
REC63P-13907-03	5032617	318
REC6F5-12411-03	434841	322
REC6F5-12411-03	500544	323
REC6F5-12411-03	5005440	321
REC6F5-12411-03	434841	323
REC6F5-12411-03		322-326
REC763735	387361	369-372
REC763775	584586	281
REC763775	763775	281
REC763775	583533	281
REC763775		287
REC764102	387139	297
REC764102	387142	297
REC764102		298-299
REC764337	313992	361
REC765431	382547	341-370-371
REC765642	329391	335-369
REC766779	320745	303
REC766779	335360	303
REC766779		303
REC766871	318609	311
REC767970	305987	300-361
REC775518	375638	369-371
REC777129	331107	345
REC777129	389589	372
REC777129		369-370
REC777212	385528	349
REC777212	389642	371
REC777212		370
REC777213	377230	339
REC777213	377230	371
REC777213		369
REC777214	396809	339
REC777214	396809	372
REC777214		369
REC802113	394546	304-307
REC802133	392567	304
REC802133	392615	304
REC802133	433941	304
REC802133		307
REC802243	313065	309
REC802288	325273	302-303
REC802307	332010	302-303
REC855686		263
REC87604		358-359
REC87606		358-359
REC87607		358-359
REC87608		357-359
REC87617		358-359
REC87619		358-359
REC87622		357-359
REC87670		300
REC878763	396041	297-299
REC878846	313413	303
REC878846		307
REC878904	436195	320-321-323-326
REC89-825096T01	5030783	275
REC90794-46866		263
REC90794-46868		263
REC908158	908158	341-343-345-347
REC908194	908194	363
REC908383	908383	363
REC908855	908855	361
REC909140	909140	363
REC909386	909386	339-341
REC911019	911019	361
REC911685	911685	361
REC911961	911961	341-343
REC911962	911962	345-347
REC915954	915954	343-345
REC925093	320303	339
REC93-06511	312932	272
REC93-06522	338534	272
REC93-06522	323653	272
REC93-08663	203697	272
REC93-08664	203725	272
REC93-08665	330527	272

REF.	R.O. /OEM	PAG
REC93-08666	331970	272
REC93-08667	335905	272
REC93-08668	395460	272
REC967344	313446	341-343-363
REC981195	981195	361
REC981196	981196	361
REC981268	981268	361
REC981911	981911	265
REC982230	982230	265
REC984491	984491	265
REC986979	22631 + 22632 + 22633	350-351-352
RECOBBRACKET		262
RECOBELEMENT		263
RECOBFILTER		263
RECYS-225-15		263
RM35-802893Q		263
SOL0001-073-06P		374
SOL2011-080-07		374
SOL2011-085-09		374
SOL2111-093-07	398126	374
SOL2111-093-08	174938	374
SOL2111-093-09		374
SOL2111-093-10	174950	374
SOL2111-093-11	174817	374
SOL2211-100-14	176425	374
SOL2211-101-13	175191	374
SOL2211-103-12	176424	374
SOL2211-105-11	175190	374
SOL2311-120-17	176422	374
SOL2311-123-15	176421	374
SOL2311-125-13	386909	374
SOL2311-125-14		374
SOL2411-130-19	176215	374
SOL2411-130-21	176216	374
SOL2411-133-17	176214	374
SOL2411-135-15	391198	374
SOL2411-138-13	391668	374
SOL2411-140-11	382761	374
SOL2413-125-19	176215	374
SOL2413-125-21	176216	374
SOL2413-128-17	176214	374
SOL2413-130-15	391198	374
SOL2413-133-13	391668	374
SOL2431-130-19	176215	374
SOL2431-130-19	389510	374
SOL2431-130-21	176216	374
SOL2431-130-21	389512	374
SOL2431-133-17	176214	374
SOL2431-133-17	389948	374
SOL2431-135-15	389949	374
SOL2431-135-15	391198	374
SOL2511-142-23	391203	375
SOL2511-143-21	391202	375
SOL2511-145-19	391201	375
SOL2511-148-17	391200	375
SOL2511-150-15	391535	375
SOL2512-143-21		375
SOL2512-145-19		375
SOL2512-148-17		375
SOL2512-150-15		375
SOL2513-140-21	391202	375
SOL2513-143-19	391201	375
SOL2513-145-17	391200	375
SOL2513-148-15	391535	375
SOL2514-140-21		375
SOL2514-143-19		375
SOL2514-145-17		375
SOL2514-148-15		375
SOL2531-140-19	389924	375
SOL2531-140-19	391201	375
SOL2531-140-21	389923	375
SOL2531-140-21	391202	375
SOL2531-140-23	289019	375
SOL2531-140-23	391203	375
SOL2531-143-17	391200	375
SOL2531-143-17	391290	375
SOL2531-145-15	174926	375
SOL2531-145-15	391535	375
SOL2532-140-19	390821	375
SOL2532-140-21	390822	375
SOL2532-140-23	390823	375
SOL2532-143-17	431930	375
SOL2532-145-15	174927	375
SOL3413-138-15	5033322	375
SOL3413-138-17	5033323	375
SOL3413-138-19	5033324	375
SOL3413-138-21	5033325	375
SOL3451-139-17	5033323	375
SOL3451-139-17	5033327	375
SOL3451-139-19	5033324	375
SOL3451-139-19	5033328	375
SOL3451-139-21	5033325	375
SOL3451-139-21	5033329	375
SOL3451-139-23	5033326	375
SOL3451-139-23	5033330	375
SOL3452-139-17	5033955	375
SOL3452-139-19	5033956	375
SOL3452-139-21	5033957	375
SOL4111-093-07A	5033200	374
SOL4111-093-08A	5005383	374
SOL4111-093-09A	5005384	374
SOL4111-093-10A	5005385	374
SOL4111-093-11A	5033203	374
SOL4211-100-14	5032110	374
SOL4211-101-13	5032109	374
SOL4211-103-12	5032108	374
SOL4211-105-11	5032107	374
SOL4311-116-12	5031624	374
SOL4311-116-13	5031619	374
SOL4311-116-14	5031620	374
SOL4311-118-11	5031623	374
SOL4311-120-10	5031622	374
SOL4511-150-15		375
SOL4511-153-19		375
SOL4511-153-21		375
SOL4511-155-17		375
SOL4512-153-19		375
SOL4512-153-21		375
SOL4512-155-17		375
SOL4512-158-15		375
SOL4571-148-23		375
SOL4571-149-22		375
SOL4571-151-20		375
SOL4571-154-18		375
SOL4572-148-23		375
SOL4572-149-22		375
SOL4572-151-20		375
SOL4572-154-18		375
SOL9311-111-13		376
SOL9311-114-12		376
SOL9411-132-19		376
SOL9411-132-21		376
SOL9411-133-17		376
SOL9411-135-15		376
SOL9411-138-13		376
SOL9411-140-09		376
SOL9411-140-11		376
SOL9431-130-19		376
SOL9431-130-21		376
SOL9431-133-17		376
SOL9431-135-15		376
SOL9431-138-13		376
SOL9432-130-19		376
SOL9432-133-17		376
SOL9432-135-15		376
SOL9432-138-13		376
SOL9511-143-21		376
SOL9511-145-19		376
SOL9511-148-17		376
SOL9511-150-15		376
SOL9511-153-13		376
SOL9511-155-11		376
SOL9511-160-13		376
SOL9531-140-19		376
SOL9531-140-21		376
SOL9531-140-23		376
SOL9531-143-17		376
SOL9531-145-15		376
SOL9532-140-19		376
SOL9532-140-21		376
SOL9532-140-23		376
SOL9532-143-17		376
SOL9532-145-15		376
SOL9571-148-23		376
SOL9571-150-21		376
SOL9571-153-19		376
SOL9571-155-17		376
SOL9571-158-15		376
SOL9572-148-23		376
SOL9572-150-21		376
SOL9572-153-19		376
SOL9572-155-17		376
SOL9572-158-15		376
SOLRBX-100		375
SOLRBX-101		375
SOLRBX-106		375
SOLRBX-110		375
SOLRBX-111		375
SOLRBX-125		375
SOLRBX-126		375
TEN00900	976669	269
TEN00901	982277	269
TEN00902	982438	269
TEN00902	385818	269
TEN00903	984513	269
TEN00903	3853818	269
TEN00904	983952	270
TEN00905	338742	272
TEN00906	983494	270
TEN00907	36745	270
TEN00907	393023	270
TEN00908	392123	270
TEN00909	392462	271
TEN00910	433458	271
TEN00910	398331	271
TEN00911	395780	271
TEN00912	123009	272
TEN00912	327606	272
TEN00912	173029	272
TEN00913	334451	271
TEN00913	432397	271
TEN00914	434029	271
TEN00914/1	434029	271
TEN00915	398873	272
TEN00916	984547	270
TEN00917	431708	270
TEN00918	433580	271
TEN00918	5007089	271
TEN00919	385393	270
TEN00919	986158	270
TEN00920	987067	269-270
TEN00920	3854061	270
TEN00921	338635	271
TEN00922	3854130	270
TEN00923		270
TEN00925	5031705	270
TEN00926	5030907	272
TEN00926	5034616	272
TEN00927	5032929	272
TEN00928	397768	271
TEN00928AL		271
TEN00929	389999	270
TEN00930	5035786	270
TEN00930	5030265	270
TEN00931	5031536	272
TEN00932	5030267	271
TEN00933	5031705	271
TEN00934	5033185	272
TEN00935	5031538	271
TEN00936	5033167	271
TEN00937	5032930	271
WI3176P3		294
WI3176PS		294
WI3180P3		296
WI3180PS		296
WI3180S3		296
WI3180SS		296
WI3209P2		296
WI3209PS		296
WI3209S2		296
WI3209SS		296
WI3210P3		296
WI3210PS		296
WI3210S3		296
WI3210SS		296
WI3211P3		295
WI3211PS		295

ÍNDICE / TABLE OF CONTENTS / INDICE

R.O. / OEM --> REF

R.O. /OEM	REF	PAG
33367	REC333670	303
34559	REC340559	300
36745	TEN00907	270
43577	REC439078	316
86276	PH130-0014	274
98410	PH375-0029	275
115742	REC115742	284-285
123009	TEN00912	272
126776	REC126776	325
126870	REC126870	345-347
127084	REC127084	341-343-353-355-356
160084	REC160084	339-345-347
173029	CM123009	267-331
173029	CM123009A	267
174508	GS31084	262
174817	SOL2111-093-11	374
174926	SOL2531-145-15	375
174927	SOL2532-145-15	375
174938	SOL2111-093-08	374
174950	SOL2111-093-10	374
175190	SOL2211-105-11	374
175191	SOL2211-101-13	374
175266	REC175266	354-355-356
175267	REC175267	354-355-356
175268	REC175268	355-356
175269	REC175269	355
175386	REC0763808	281
175974	REC5005801	289
176214	SOL2411-133-17	374
176214	SOL2413-128-17	374
176214	SOL2431-133-17	374
176215	SOL2411-130-19	374
176215	SOL2413-125-19	374
176215	SOL2431-130-19	374
176216	SOL2411-130-21	374
176216	SOL2413-125-21	374
176216	SOL2431-130-21	374
176421	SOL2311-123-15	374
176422	SOL2311-120-17	374
176424	SOL2211-103-12	374
176425	SOL2211-100-14	374
176445	GS31085	262
202893	REC25-48171	363
203130	REC203130	302-303
203697	REC93-08663	272
203698	REC300-01744	273
203725	REC93-08664	272
277432	PH130-0038	273
278232	PH130-0038	273
289019	SOL2531-140-23	375
300611	REC300611	331-371-372
300771	REC300771	372
301877	REC301877	331-333-363
301967	REC301967	320-335-363
302035	REC302035	343-345-347
302325	REC302325	331-337-339-341-343-345-347-366
302337	REC25-33145	363
302497	REC302497	330-331-333-335
302537	REC302537	363
302540	REC125017	363
302564	REC302564	361-362
302588	REC302588	339-363
302804	REC18-32665	354
302873	REC302325	349
303059	REC339543	339-363
303067	REC3852045	363
303191	REC25-62702	363
303345	REC303345	361-362
303347	REC303347	333-363
303360	REC25-35027	363
303615	REC303615	319
304174	REC304174	363
304454	REC304454	331-333
304784	REC304784	312
305123	REC305123	345-349-363
305176	REC305176	311
305185	REC305185	266-318
305242	REC305242	330-363
305270	REC3852928	363
305282	REC305282	337-339
305586	REC305586	324
305739	REC332583	363
305762	REC305762	339
305981	REC21-20553	349
305987	REC767970	300-361
306376	REC306376	337
306394	REC3852056	330-345-347-354-355-356
306643	REC306643	321-331-342-345-347-349-366
307069	REC307069	302-303
307133	REC307133	312
307161	REC307161	343-347
307551	REC10-79953Q04	330-331-333-335-339-341-349
307552	REC12-191833	330-331
308239	REC308239	266-318
308328	REC308328	324
308627	REC308627	331
308876	REC308876	363
308928	REC308928	339-341-349-371-372
309004	REC309004	335
309243	REC309243	337
309731	REC309731	363
309955	REC309955	349-354
309989	REC309989	361
310058	REC27-62386001	321-322-323
310327	REC25-30224	337
310414	REC310414	363
310433	REC310433	297-298-299
310584	REC310584	337-363
310585	REC25-30613	349-363-366
310599	REC310599	361-362
310649	REC310649	361
310967	REC25-30613	363
311145	REC311145	324
311338	REC25-62705	333-363
311538	REC311538	343-345-347
311598	REC12-191833	341
311598	REC3855081	333-335-337-339-343-345-347
312456	REC35-49088A2	265
312932	REC93-06511	272
313065	REC802243	309
313175	REC313175	363
313282	REC313282	361-362
313284	REC313284	361-362
313339	REC313339	337-339-341
313340	REC313340	363
313353	REC313353	361
313413	REC878846	303
313416	REC3852120	322-323
313445	REC313445	341
313446	REC967344	341-343-363
313447	REC313447	341
313448	REC313448	341-343-345-347-349
313715	REC313715	341-345-347-349
313715	REC313763	343
313754	REC313754	341-363
313763	REC313763	308
313782	REC313782	301
313893	REC338518	363
313992	REC764337	361
314008	REC314008	341-342-345-347-349-366
314082	REC314082	339-341
314115	REC314115	314
314167	REC314167	361-362
314281	REC341281	361
314491	REC314491	363
314502	REC314502	337-339-341-343-354-355-356
314503	REC314503	337-339-341-343-354-355-356
314728	REC314728	343-345-347-349-363
314730	REC11-35921	343-345-347-349
314731	REC314731	343-345-349
314745	REC314745	343-345-347-349
315232	REC315232	318
315538	REC315538	311
315578	REC315578	313
315788	REC315788	339
315810	REC315810	337-339-341-343-355-356
315837	REC315837	339
315838	REC315838	339
315868	REC315868	310
315869	REC315869	310
316506	REC316506	331-333-337-349
316563	REC316563	349
317178	REC332583	363
317230	REC317230	341
317232	REC317232	341
317245	REC317245	321-322-325-326
317624	REC317624	337-343-344-347
317914	REC317914	310
317955	REC317955	310
318303	REC318303	341-350-351
318335	REC318335	311
318358	REC318358	302
318372	REC318372	337-339-341-342-345-347-349-363
318373	REC318373	308-321
318395	REC318395	321-322-325-326
318544	REC22-67892A05	330-337-341-343-345-347
318609	REC766871	311
318717	REC318717	363
318917	REC318917	324
318924	REC318924	313
318925	REC318925	310
318932	REC318932	312
318971	REC318971	331-354-355
318972	REC318972	331-361-362
318995	REC318995	331-369
319085	REC319085	331
319174	REC319174	313
319276	REC319276	341
319332	REC319332	312
319348	REC319348	307
319586	REC319586	341
319633	REC319633	302-303
319661	REC0319661	312
319662	REC0319662	363
319665	REC319665	311
319710	REC319710	307
319890	REC319890	355-356
319891	REC319891	333-354-355-356
319895	REC319895	339-351
320041	REC320041	333-339-341
320140	REC320140	349-341-343
320166	REC320166	339
320167	REC320167	339
320168	REC320168	339
320303	REC925093	339
320305	REC320305	337-339-353-355
320310	REC320310	337-339
320311	REC320311	337-339
320499	REC352960	297-299
320569	REC5008966	349-356
320570	REC320570	345-347-349-355-356
320630	REC337774	349
320635	REC320635	349-352
320679	REC320679	314
320745	REC766779	303
320785	REC320785	333-354-355-356
320862	REC26-76868	345-349-361-362-363
320880	REC320880	321-322-325-326
320936	REC320936	309-343-345-347
320943	REC320943	342-345-347-349-366
320961	REC320961	309-343-344-345
320981	REC320981	339-369-370
321008	REC321008	343-345-347-366
321027	REC321027	321-322-325-326
321120	REC321120	321
321175	REC331188	349
321182	REC321182	311
321184	REC321184	321-322-324
321188	REC338485	349
321220	REC321220	322-325-326
321221	REC321221	321-322-325-326
321222	REC321222	321-322-325-326
321453	REC26-69188	333-349-361-362-363
321459	REC321459	335-361
321466	REC321466	361-362-363
321466	REC342786	339
321467	REC321467	300-337-339-361-362-363
321479	REC0321479	313

R.O. /OEM	REF	PAG
321480	REC321480	331-361-362
321481	REC321481	331-361
321497	REC321497	314
321692	REC321692	321-322-325-326
321692	REC435957	325
321738	REC321738	331-333
321786	REC321786	361-362
321787	REC321787	335-361-362
321788	REC321788	300-361-362
321831	REC321831	300-361
321886	REC321886	325
321895	REC321895	300-361
321921	REC321921	335
321928	REC321928	333-361-362
321932	REC321932	321-322-323
322494	REC322494	330
322938	REC322938	345-347
322941	REC322941	343-345
323214	REC323214	308
323338	REC323338	314
323361	REC323361	343-345-347
323362	REC323362	343-345-347
323469	REC323469	311
323582	REC323582	323
323664	REC323664	343-350
323889	REC323889	341
323890	REC323890	341
323942	REC323942	331-355-356
323943	REC323943	333-355-356
324097	REC324097	331-368-369
324334	REC324334	331
324369	REC324369	341-343-345-347-349
324430	REC331980	339
324449	REC324449	335
324639	REC324639	330-361-362-363
324640	REC324640	330-369
324641	REC324641	330-368-369
324670	REC324670	343-345-347
324717	REC324717	307
324766	REC324766	341-343
324852	REC324852	337-347
324937	REC324937	309-339-341
324960	REC302325	335
324981	REC324981	337-341
325040	REC325040	330
325092	REC325092	312
325211	REC325211	310
325260	REC325260	313
325273	REC802288	302-303
325397	REC325397	368-369
325537	REC325537	333
325647	REC335361	302
325721	REC325721	307
326260	REC0326260	313
326264	REC0326264	310
326649	REC326649	363
326741	REC326741	363
326849	REC326849	347
326877	REC0326877	272
326926	REC326926	312
327031	REC327031	361-362
327345	REC327345	341-343
327606	CM327606	267
327606	CM327606A	267
327606	TEN00912	272
327656	REC327656	343-345-347-349
327669	REC327669	345-347
327674	REC327674	311
327707	REC327707	312
327795	REC335359	301
328096	REC328096	339-341-345
328522	REC328522	331-355
328590	REC328590	308
328618	REC328618	308
328622	REC328622	313
328623	REC328623	302-303
328694	REC328694	337
328702	REC328702	343-345-347
328725	REC328725	330
328743	REC328743	343
328744	REC328744	330-337
328751	REC328751	333-335-368-369-370
328753	REC328753	333
328754	REC328754	333
328755	REC328755	333
328825	REC328825	344
329076	REC329076	324
329103	REC329103	302-303
329319	REC0329319	323
329380	REC326649	363
329381	REC3852045	363
329390	REC329390	335
329391	REC765642	335-369
329419	REC329419	301-303
329718	REC329718	313
329826	REC329826	309
329828	REC329828	307
329830	REC329830	321-324
329920	REC329920	311
329922	REC329922	361-362-363
329923	REC329923	361-362-363
329975	REC329975	308
330137	REC330137	300-301-341-343-361-362-363
330265	REC330265	337-343-345-347
330273	REC330273	325-326
330327	REC330327	300-335-361-362-363
330525	REC300-01633	273
330527	REC93-08665	272
330560	REC330560	335-367-369
330619	REC344470	335-372
330621	REC0330621	307
330698	REC330689	314
330818	REC330818	301-303
330854	REC31-02747	297-298
330909	REC330909	314
331016	REC331016	309
331103	REC331103	361
331107	REC331107	343-347-366-372
331107	REC777129	345
331188	REC331188	322-337-343-345-347
331353	REC331353	343-345-347-349-366
331532	REC331532	313
331880	REC323664	343
331880	REC331880	341-344-347
331901	REC331901	339-341-371-372
331916	REC331916	310
331917	REC331917	310
331970	REC93-08666	272
331980	REC331980	330-339
331999	REC331999	343-345-347
332010	REC802307	302-303
332108	REC332108	322-324
332130	REC332130	323
332205	REC342786	339
332205	REC342786	361
332261	REC332261	333-361-362
332266	REC332266	312
332319	REC332319	311
332369	REC332369	321-322-324
332491	REC332491	337-350-351
332514	REC332514	337
332583	REC26-01674	333
332583	REC332583	363
332584	REC332583	363-366
332584	REC332584	337-339-347
332584	REC3852045	341
332816	REC332816	302-303
332817	REC332817	302-303
332818	REC332818	303
332819	REC332819	302-303
332942	REC353076	361-301
332944	REC332944	322-324
333008	REC333008	315
333554	REC340116	303
333572	REC333572	335-363
333725	REC333725	337
333758	REC333758	337
333771	REC333771	337
333879	REC333879	308
333957	REC333957	343-345-347
334163	REC334163	339-341-343-345-347
334451	TEN00913	271
334590	REC334590	331-355-356
334665	REC0334665	299
334726	REC333670	303
334897	REC334897	337-341-372
334950	REC321481	361
334950	REC334950	345-347
335334	REC335334	319
335359	REC335359	301
335360	REC766779	303
335361	REC335361	302
335403	REC335403	312
335404	REC335404	312
335419	REC335419	308
335523	REC335523	363
335633	REC335633	313
335679	REC335679	352
335818	REC335818	312
335819	REC335819	312
335905	REC93-08667	272
335981	REC335981	323
336178	REC336178	321-325
336185	REC336185	320-321-325
336226	REC336226	313
336227	REC336227	314
336308	REC336308	309
336388	REC336388	313
336389	REC336289	313
336493	REC336493	330
336530	REC336530	337-341
336565	REC435123	345
336947	REC336947	324
336982	REC336982	337
337061	REC337061	343-344-347
337067	REC337067	325
337068	REC337068	324
337533	REC337533	325
337774	REC337774	345-347-350
337778	REC337778	343-344
338222	REC338222	302-303
338484	REC338484	343-345-347-349-366
338485	REC338485	345-347-366-370-371
338486	REC338486	345-347-349-366-368-370-371
338504	REC338504	343-345-347
338518	REC338518	333-363
338522	REC338522	363
338534	REC93-06522	272
338601	REC354580	342-347
338632	REC338632	322-324
338635	CM338635	268
338635	TEN00921	271
338636	REC338636	342-347
338742	CM338742	269
338742	TEN00905	272
338876	REC338876	319
338879	REC338879	319
338882	REC338882	314
338893	REC338893	342-345-347-349-366
339044	REC339044	322-323
339543	REC339543	363
339620	REC339620	361-301
340115	REC340115	302-303
340116	REC340116	303
340559	REC340559	300
340619	REC340619	337-341-368-369-370
340811	REC340811	333
340975	REC0340975	325
340976	REC0340976	325
341038	REC341038	337-341-369-370
341219	REC341219	343-347
341220	REC341220	343-345-347
341280	REC341280	343-344-347-361
341281	REC341281	345-347
341732	REC341732	337-339-341
342291	REC350357	311
342513	REC342513	308-321
342786	REC333771	339
342786	REC342786	337-341-361-362
343105	REC343105	322-325
343141	REC343141	321-324
343853	REC343853	308
343863	REC343863	310
344386	REC344386	308
344470	REC344470	333-339-371
344771	REC344771	324
345257	REC345257	303
345905	REC345905	345-352
346006	REC346006	352
347371	REC356900	347-352
349193	REC349193	347
350038	REC350038	347
350271	REC350271	343-345-347
351018	REC351018	307
351019	REC351019	309
355911	REC0355911	266
375638	REC775518	369-371

R.O. /OEM	REF	PAG
377139	REC377139	296-298-299
377230	REC777213	339-371
378252	REC378252	296-298-299
378674	PH130-0038	273
378895	REC396521	317
379091	PH130-0038	273
379312	REC387262	317
379312	REC396522	317
379504	REC379504	341-343-360-361
379818	PH130-0038	273
380095	PH375-0012	275
380139	PH130-0038	273
380238	PH130-0038	273
381864	PH130-0038	273
382049	REC439071	316
382343	REC382343	337-341-359-360
382363	REC382363	316
382407	REC382407	337-341-343-345-347-359-360-361
382408	REC382408	341-343-345-349-360-361
382481	REC31-02748	297-298
382547	REC765431	341-370-371
382761	SOL2411-140-11	374
383052	REC439071	316
383067	REC439071	316
383622	PH375-0012	275
383691	PH130-0043	274
384087	REC384087	339-367-369-370
384195	REC384195	343-360-361
384777	PH130-0043	274
384799	PH130-0008	275
385043	REC385043	341-343-360-361
385068	REC385068	341-360
385072	REC385072	370-371
385087	REC385087	341
385175	REC31-32575T1	339-359-360
385393	TEN00919	270
385401	PH130-0038	273
385416	REC439084	304
385503	REC31-02803	297-299
385528	REC777212	349
385529	PH130-0044	274
386084	REC386084	331-369-371
386279	REC386918	294
386280	REC386280	294
386465	PH130-0044	274
386545	MP39100	289
386597	PH130-0038	273
386657	PH130-0043	274
386764	REC386764	337-339-359-360
386765	REC386765	337-339-359-360
386766	REC386766	339-359-360
386866	REC386866	354-355
386909	SOL2311-125-13	374
387041	REC5007190	296-297-299
387094	PH130-0039	275
387139	REC764102	297
387142	REC764102	297
387247	REC387247	345-349-360-361
387262	REC387262	317
387277	PH200-T020	278
387361	REC763735	369-372
387656	REC387656	343-345-347-349-360-361
387684	PH130-0045	274
387787	REC387787	297-299
387817	REC387817	344-347-349-360-361
388344	REC388344	297-298-299
389039	REC389039	344-347-360-361
389042	REC389042	345-347360-361
389133	REC389133	364
389275	PH130-0045	274
389380	PH130-0044	274
389398	PH375-0012	275
389455	REC389455	344
389493	PH375-0012	275
389510	SOL2431-130-19	374
389512	SOL2431-130-21	374
389556	REC439085	305
389576	REC389576	372
389577	REC389577	330-367
389589	REC777129	372
389613	REC31-02798	297-298
389642	REC777212	371
389923	SOL2531-140-21	375
389924	SOL2531-140-19	375
389948	SOL2431-133-17	374
389949	SOL2431-135-15	374
389954	PH130-0044	274
389999	CM389999	267
389999	CM389999A	267
389999	TEN00929	270
390078	REC439084	304
390286	REC390286	372
390509	REC390509	294
390510	REC390510	294
390613	REC390613	367
390641	REC31-02806	297-299
390821	SOL2532-140-19	375
390822	SOL2532-140-21	375
390823	SOL2532-140-23	375
390900	REC390900	296
391170	REC391170	294-295
391198	SOL2411-135-15	374
391198	SOL2413-130-15	374
391198	SOL2431-135-15	374
391200	SOL2511-148-17	375
391200	SOL2513-145-17	375
391200	SOL2531-143-17	375
391201	SOL2511-145-19	375
391201	SOL2513-143-19	375
391201	SOL2531-140-19	375
391202	SOL2511-143-21	375
391202	SOL2513-140-21	375
391202	SOL2531-140-21	375
391203	SOL2511-142-23	375
391203	SOL2531-140-23	375
391264	PH200-T014	278
391290	SOL2531-143-17	375
391300	REC439085	305
391305	REC439072	316
391416	REC391416	294-295
391511	PH130-0008	275
391535	SOL2511-150-15	375
391535	SOL2513-148-15	375
391535	SOL2531-145-15	375
391554	PH130-0044	274
391668	SOL2411-138-13	374
391668	SOL2413-133-13	374
391735	PH130-0043	274
391741	REC391741	365
391988	REC391988	306
392123	CM392123	267
392123	CM392123A	267
392123	TEN00908	270
392462	CM392462	267-339
392462	CM392462A	267
392462	TEN00909	271
392550	REC439076	316
392567	REC802133	304
392615	REC802133	304
393023	CM393023	267
393023	CM393023A	267
393088	REC393088	319
393103	REC393103	319
393259	PH200-T014	278
393301	MP39760	289
393433	REC439083	304
393561	REC393561	311
393570	PH130-0012	274
393630	REC393630	332-364
393632	REC393632	333-367
393896	REC31-02799	297-298
393988	PH200-T014	278
394176	PH200-T014	278
394408	REC394408	325-326
394411	REC394411	323
394462	REC394462	300
394488	REC5004705	300
394546	REC802113	304-307
394711	REC394711	364-369
394885	REC434381	305
394930	REC394930	294-295
395073	REC395073	365-370
395204	REC0395204	278-279
395207	PH130-0039	275
395209	REC395209	345-353
395270	REC395270	364-369
395289	REC395289	333-335-369*-370-371
395391	REC0395204	278-279
395401	REC395401	296-298
395419	PH375-0012	275
395460	REC93-08668	272
395627	REC395627	297-298-299
395780	TEN00911	271
395861	REC395861	300
395911	REC0395911	266
396041	REC878763	297-299
396077	REC0586695	284
396141	REC0586697	283
396161	REC0500581	266
396235	PH130-0008	275
396350	REC396350	357-359
396351	REC396351	332-357-359
396355	REC396355	357-359
396377	REC396377	294-295
396379	REC396379	294-295
396504	REC396504	294-295
396520	REC396520	317
396521	REC396521	317
396522	REC396522	317
396725	REC396725	341-369-370-371
396750	REC396750	305-307
396809	REC777214	339-372
396987	REC396987	322-323-326
397004	REC0397004	266
397023	PH130-0008	275
397537	REC397537	337-359-360
397538	REC397538	337-359-360
397768	CM397768	267
397768	CM397768A	267
397768	TEN00928	271
397839	REC1399-07350	318
398042	REC398042	345-347-355
398047	REC39390	305
398126	SOL2111-093-07	374
398172	REC398172	306-307
398243	REC0398243	266
398319	REC40135	265
398327	REC40135	265
398331	CM398331A	267
398452	REC439072	316
398514	REC398514	319-320
398526	REC439076	316
398529	REC398529	296-298-299
398532	REC439071	316
398693	REC398693	306-307
398873	CM398873	267-337
398873	CM398873A	267-337
398873	TEN00915	272
398874	REC398874	337
398901	REC398901	337-359-360
431708	CM431708	267-341-343-345-347
431708	TEN00917	270
431870	REC431870	295
431930	SOL2532-143-17	375
432264	REC432264	337-359-360
432276	REC432276	337
432570	REC432570	305-307
432571	REC436891	306
432925	PH130-0018	275
432941	REC432941	337-369-372
432955	REC432955	365-370
432962	REC432962	319-320
433190	REC433190	265
433226	PH200-T022	277
433325	REC0433325	266
433458	CM433458	267
433458	TEN00910	271
433550	REC433550	357-359
433570	REC433570	339-351
433580	CM5007089	267
433580	TEN00918	271
433935	REC0767407	371
433941	REC802133	304
434029	CM434029	268
434029	TEN00914	271
434029	TEN00914/1	271
434137	REC434137	323
434153	REC414153	354-355
434381	REC434381	305
434391	REC434391	341
434424	REC434424	369-372
434467	REC434467	345-360-361
434496	PH200-T005	277
434588	REC434588	337
434839	REC434839	266
434841	REC6F5-12411-03	322
434844	REC434844	297-299
434888	REC439076	316
435027	REC435027	343
435123	REC435123	345-350
435230	REC0435230	266
435274	REC435274	337

R.O. /OEM	REF	PAG
435279	REC0435279	329
435390	REC435390	331-367-369
435443	REC439076	316
435491	REC435491	322-323
435519	REC435519	341
435678	REC439078	316
435752	REC439078	316
435821	REC5001593	343-366-372
435957	REC435957	321
435959	REC435990	347
435959	REC5007968	343-345-349-368-370-371
435990	REC435990	342-345-368
436137	REC389576	330-372
436195	REC878904	320-321-323-326
436254	REC436254	295
436353	REC436353	295-296
436358	REC436358	304-307
436745	CM393023	339-341-343-345-347
436888	REC436888	353
436891	REC436891	306
436972	REC436972	295
437088	REC31-17514A2	297
437090	REC437090	322-323
437155	REC437155	306-307
437288	REC437288	333
437330	REC437330	343-345-347
437725	REC437725	306-307
437909	REC437907	365-370
438048	REC5007022	329
438529	PH200-T005	277
438531	PH200-T005	277
438543	REC438543	341-368-370
438544	REC438544	337-367-369
438545	REC438545	337-368-369
438555	REC1399-07353	318
438556	REC1399-07352	318
438562	REC1399-07351	318
438579	REC438579	365-370
438592	REC438592	364-369
438602	REC438602	365-370
438616	REC438616	319-320
438786	PH200-T004	277
438904	REC39390	305
439071	REC439071	316
439075	REC439075	316
439076	REC439076	316
439077	REC439077	364-369
439078	REC439078	316
439083	REC439083	304
439085	REC439085	305
439138	REC439138	337-353
439185	REC439185	341-353
439476	REC439476	343-344-347-349
439542	REC0439542	266
439559	REC439559	306-307
439561	REC300-08010	278-279
439972	REC5007022	329-344
439973	REC439973	329-344
500544	REC6F5-12411-03	323
508180	MP39760	289
509219	PH350-0003	278-279
552906	REC328522	354
553126	REC553126	337-363
554545	REC0554545	333-363
580148	REC0580148	290
580256	REC0580256	290
580290	REC0580290	290
580321	REC0580321	290
581207	REC0581207	290
581295	REC3857533	276
581397	REC0764708	284
581407	REC0502880	287-288
581419	REC0581419	290
581528	PH375-0033	275
581726	REC581726	284
581778	PH350-0002	276
581786	REC0502881	287
581957	REC0583724	280
582016	REC0583672	280
582048	PH200-T020	278
582056	REC0582056	284
582057	REC0582057	284-286-287
582091	REC0502888	287
582125	REC0582125	283
582155	PH200-T020	278
582160	REC0502890	287
582261	REC0586695	284
582281	REC0586697	283
582285	REC0586697	283
582382	REC0582382	287-288
582399	PH350-0001	276
582400	REC0582642	283
582454	REC0582125	283
582472	REC3857533	276
582473	REC3857533	276
582497	REC0583672	280
582502	REC0586697	283
582504	REC0586695	284
582506	REC0583724	280
582508	REC0582508	288
582514	REC0763776	281
582556	REC0582642	283
582642	REC0582642	283
582705	REC0763793	283
582708	PH375-0012	275
582714	REC0586695	284
582730	REC0583724	280
582757	REC0586697	283
582800	REC0586695	284
582867	REC0583672	280
582880	REC0586697	283
582889	REC0586695	284
582904	REC0395204	278-279
583023	REC0583672	280
583045	REC0763776	281
583104	REC0583672	280
583114	REC0583114	284-286-287
583119	REC0583724	280
583167	REC0586697	283
583168	REC0586697	283
583169	REC0586697	283
583172	REC0586695	284
583174	REC0586695	284
583175	REC0586697	283
583241	REC0586695	284
583320	REC0583320	284
583379	REC0763776	281
583387	REC0583387	281-285-286
583512	REC0763791	278-279
583529	REC0585195	278-279
583644	REC0583724	280
583668	REC0583668	280
583671	REC0583672	280
583672	REC0583672	280
583689	REC0583689	278-279
583724	REC0583724	280
583737	REC584561	289
583740	REC0583740	288-289
583748	REC0583748	284-286
583865	REC0583865	282-286-287
584027	REC0584028	283
584028	REC0584028	283
584035	REC0584035	282
584036	REC0586667	282
584037	REC0586667	282
584040	REC0584041	282
584041	REC0584041	282
584107	PH200-T020	278
584128	PH375-0029	275
584204	REC0585195	278-279
584205	REC0763791	278-279
584287	REC0763765	281
584333	REC0584333	279
584416	REC3857533	276
584477	REC0584477	288
584504	REC5000611	279
584508	REC0586695	284
584580	REC584580	275
584586	REC763775	281
584632	REC0502890	287
584637	REC0586661	282
584641	REC0586271	278-279
584642	REC0763803	282
584783	REC0586798	283-285
584799	PH130-0008	275
584818	PH130-0026	274
584840	REC5000611	279
584890	REC300-03588	278-279
584912	REC0584986	282
584954	REC0584954	280-285
584981	REC0763759	280
584985	REC0584985	282
584989	REC0584986	282
584990	REC0584985	282
584991	REC0584986	282
585001	REC300-03587	278-279
585051	PH130-0044	274
585056	PH130-0016	274
585057	PH130-0044	274
585058	PH130-0043	274
585060	PH130-0012	274
585062	PH130-0039	275
585063	PH130-0045	274
585073	REC5000611	279
585087	REC0763770	281
585114	REC0586661	282
585145	REC5004532	282
585189	REC5004532	282
585192	REC0763791	278-279
585195	REC0585195	278-279
585196	PH130-0044	274
585197	PH130-0043	274
585261	REC0175316	283
585262	REC0175316	283
585274	REC0585274	283
585995	REC0586271	278-279
586000	REC0583689	278-279
586048	REC300-03586	278-279
586075	REC300-03585	278-279
586098	REC0765386	282
586147	REC3857533	276
586180	PH375-0012	275
586212	REC0586661	282
586217	REC0586667	282
586224	REC3857533	276
586279	PH130-0016	274
586280	PH130-0045	274
586281	PH130-0043	274
586282	PH130-0044	274
586283	PH130-0044	274
586285	PH130-0012	274
586286	PH130-0018	275
586287	PH130-0018	275
586288	PH130-0039	275
586289	PH130-0008	275
586292	REC0765386	282
586411	PH130-0008	275
586661	REC0586661	282
586667	REC0586667	282
586730	PH375-0027	275
586731	PH130-0008	275
586842	PH375-0027	275
586890	PH130-0008	275
586897	PH130-0008	275
586957	PH130-0008	275
678882	REC396521	317
763764	REC0763764	280
763765	REC0763765	281
763767	REC0763767	280
763769	REC0763769	281
763770	REC0763770	281
763773	REC0763773	281
763773	REC0763782	281
763775	REC763775	281
763776	REC0763776	281
763785	REC0583668	280
765553	REC433190	265
765591	REC438559	318
771839	RACS3214	264
772681	GS31083	262
777693	PH130-0039	275
777699	REC581528	276
778025	PH375-0029	275
778209	PH375-0027	275
778417	REC340559	300
778885	REC16510-87J00	266
778887	REC16510-82703	266
778888	REC16510-93J00	266
778992	PH130-0039	275
778993	PH130-0045	274
778994	PH130-0012	274
778996	PH130-0026	274
892187	PH375-0029	275
908034	REC35-53336	266
908158	REC908158	341-343-345-347
908194	REC908194	363
908383	REC908383	363
908855	REC908855	361
909047	REC326649	363
909140	REC909140	363
909386	REC909386	339-341
910139	REC1397-2150	266
910994	REC5004218	345

R.O. /OEM	REF	PAG
911019	REC911019	361
911685	REC911685	361
911785	REC3852548	361
911961	REC911961	341-343
911962	REC911962	345-347
913921	REC3852928	337
914716	REC337774	350
915954	REC915954	343-345
916058	REC3853655	361
976669	CM976669	267
976669	CM976669A	267
976669	TEN00900	269
980756	CM980756	268
980801	PH375-0027	275
981195	REC981195	361
981196	REC981196	361
981268	REC981268	361
981703	PH375-0027	275
981911	REC981911	265
982189	PH375-0027	275
982230	REC982230	265
982277	TEN00901	269
982438	CM982438	268
982438	TEN00902	269
983019	PH200-T014	278
983446	REC435548	277
983494	CM983494	269
983494	TEN00906	270
983952	CM984547	268
983952	TEN00904	270
984491	REC984491	265
984513	CM984513	269
984513	TEN00903	269
984547	CM984547	269
984547	TEN00916	270
985063	PH375-0029	275
987067	TEN00920	269-270
3214722	REC321722	315
3214794	REC321794	315
3234323	REC0324323	310
3343105	REC343105	322
3852020	REC126870	355
3852548	REC3852548	361
3852565	REC25-25439	363
3854130	TEN00922	270
4359073	REC439074	316-317
5000074	REC5000074	345
5000308	REC5000308	364-369
5000309	REC5000309	357-359
5000400	REC5000400	305-307
5000614	REC5000614	347-353
5000615	REC5000615	343-345-353
5000618	REC5000618	353
5000623	REC5007672	347-353
5000624	REC5000624	347-353
5000626	REC5000626	353
5001036	REC5001036	323
5001593	REC5001593	345-347-370-371-372
5001594	REC5001594	365-370-371
5001595	REC5001595	365-370-371
5004218	REC5004218	350
5004257	REC5004257	345
5004533	REC5004532	282
5004765	REC5004765	345-347-353
5005034	REC5005034	354-355
5005114	REC18-6865	278
5005254	PH200-T004	277
5005374	PH200-T005	277
5005383	SOL4111-093-08A	374
5005384	SOL4111-093-09A	374
5005385	SOL4111-093-10A	374
5005440	REC6F5-12411-03	321
5005801	REC5005801	289
5005817	PH200-T061	277
5005831	PH200-T072	277
5005838	PH200-T061	277
5005907	REC5005907	304
5005931	REC5005931	305-307
5006241	REC5006241	343-345-347
5006373	REC5006373	357-359
5006479	PH200-T072	277
5006655	REC435546	294
5006657	REC5006657	294
5006658	REC5006658	294
5006662	REC5006662	294
5006664	REC5006664	294
5006665	REC5006665	294
5006666	REC5006666	295
5006668	REC5006668	294
5006669	REC5006669	294
5006670	REC5006670	294
5006687	REC5006687	295
5006688	REC5006688	295
5006694	REC5006694	295
5006695	REC5006696	295
5006701	REC5006701	295
5006702	REC5006702	295
5006707	REC5006707	295
5006711	REC5006711	295
5006713	REC5006713	295
5006714	REC5006714	295
5006716	REC5006716	295
5006727	REC5006727	296
5006728	REC5006728	296
5006730	REC5006730	296
5006751	REC5006751	295
5007089	CM5007089	268
5007129	REC5007129	306-307
5007850	REC5007850	305-307
5030107	REC09282-10008	315
5030108	REC09282-12008	315
5030109	REC09283-10003	315
5030110	REC09283-20018	315
5030111	REC09283-20045	315
5030181	REC15170-98110	319-320
5030190	REC17472-98611	367
5030267	CM55320-98600	268
5030267	TEN00932	271
5030352	REC17400-98652	366
5030356	REC32800-95D01	278-279
5030699	REC15170-99E00	319-320
5030700	REC63P-13907-03	318
5030780	PH130-0079	274
5030783	REC89-825096T01	275
5030976	REC57630-94500	354
5031114	REC15626-99E00	318
5031232	REC09160-26015	351
5031264	REC09282-17005	315
5031266	REC09282-17009	315
5031270	REC09289-22007	315
5031400	REC15410-87J00	266
5031418	REC17471-94401	368
5031449	REC23311-95DL0	354
5031456	REC25700-88L00	358
5031482	REC38100-87J00	277
5031535	REC55122-94400	367
5031536	CM55125-95500	268
5031536	TEN00931	272
5031538	CM5031538	268
5031538	TEN00935	271
5031548	REC57630-94300	354
5031619	SOL4311-116-13	374
5031620	SOL4311-116-14	374
5031622	SOL4311-120-10	374
5031623	SOL4311-118-11	374
5031624	SOL4311-116-12	374
5031705	CM5031705	267
5031705	CM55321-87J00	268
5031705	TEN00925	270
5031705	TEN00933	271
5031731	REC17400-87E04	366
5031744	REC17400-96403	366
5031893	REC09289-20009	315
5031990	REC17411-94421	367
5032058	REC43211-87JL0	354
5032098	REC57311-96311	350
5032100	REC57521-96312	350
5032107	SOL4211-105-11	374
5032108	SOL4211-103-12	374
5032109	SOL4211-101-13	374
5032110	SOL4211-100-14	374
5032150	GS31089	262
5032170	REC57630-96300	354
5032197	PH375-0048	276
5032238	REC15410-98500	265
5032323	REC15410-87J10	265
5032424	REC13910-89J01	316-317
5032670	PH200-T046	277
5032670	PH200-T062	277
5032698	REC57510-89J00	350
5032732	REC33410-94400-000	288
5032929	CM5032929	268
5032929	TEN00927	272
5032930	CM5032930	268
5032930	TEN00937	271
5032966	REC09160-20027	351
5032967	REC09160-20042	351
5032968	REC09160-20043	351
5032969	REC09160-20044	351
5032970	REC09160-21009	351
5032985	REC09160-20041	351
5033011	REC09282-12010	315
5033015	REC09289-17006	315
5033046	REC11141-93E20	301-304
5033102,7	REC16510-05240	266
5033106	REC17400-93951	366
5033107	REC17411-93901	367
5033110	REC17452-93910	366
5033113	REC09420-03005	372
5033114	REC17471-93902	368
5033167	CM5033167	268
5033167	TEN00936	271
5033185	CM55321-93900	268
5033185	TEN00934	272
5033188	REC57100-93902	353
5033190	REC57311-93910	350
5033191	REC57510-93910	350
5033192	REC57521-93910	350
5033193	REC57610-93901	353
5033200	SOL4111-093-07A	374
5033203	SOL4111-093-11A	374
5033222	GS31035	262
5033222	GS31036	262
5033322	SOL3413-138-15	375
5033323	SOL3413-138-17	375
5033323	SOL3451-139-17	375
5033324	SOL3413-138-19	375
5033324	SOL3451-139-19	375
5033325	SOL3413-138-21	375
5033325	SOL3451-139-21	375
5033326	SOL3451-139-23	375
5033327	SOL3451-139-17	375
5033328	SOL3451-139-19	375
5033329	SOL3451-139-21	375
5033330	SOL3451-139-23	375
5033339	REC09283-10009	315
5033372	REC15170-91J00	319-320
5033381	REC17472-91J00	366
5033481	REC09283-25076	315
5033541	REC17400-90J20	366
5033639	REC11141-90J01	301-304
5033649	REC11489-90J00	309
5033702	REC63P-13907-03	318
5033706	REC15626-90J00	318
5033798	REC25700-90J01	358
5033799	PH130-0071	273
5033922	REC25700-92J00	358
5033955	SOL3452-139-17	375
5033956	SOL3452-139-19	375
5033957	SOL3452-139-21	375
5034323	REC17400-98661	366
5034462	REC11489-93E11	309
5034644	REC11141-92J01	301-304
5034757	REC51211-90J10	308
5034776	REC25700-99E00	358
5034878	REC11489-93J00	309
5034916	REC12778-93J00	314
5034978	REC14151-93J00	310
5034979	REC14152-93J00	310
5034982	REC14212-93J00	310
5034985	REC15440-93J00	266
5035022	REC16433-93J00	314
5035036	REC17400-93J01	366
5035042	REC17472-93J00	367
5035077	REC25700-93J00	358
5035078	PH130-0078	273
5035133	REC51123-93J00	314
5035135	REC51142-93J00	308
5035138	REC51211-93J00	309
5035460	REC57630-92E00	354
5035513	REC38100-96J00	277
5035603	REC17472-93911	367
5035786	TEN00930	270
5035971	REC11142-93J10	301-304
5035974	REC15410-87J30	265
5036040	REC25700-95D01	358
5036059	REC57621-94403	350
5036629	REC11141-93J10	301-304
5036635	REC63P-13907-03	318
5036802	REC11141-95J00	301-304
5036852	REC13122-95J00	314
5036914	REC17693-95J00	314
5036938	REC09282-15008	315
5036972	PH130-0077	273

R.O. /OEM	REF	PAG
5037038	REC25700-95J00	358
5037490	REC11141-97J02	301-304
5037584	REC15170-94J00	319-320
5040343	PH130-0061	273
5040786	PH130-0006	273
5844241	REC0583689	278-279
435676	REC439078	316
581987	REC0583672	280
583604	REC0586697	283
123009	CM123009	267
123009	CM123009A	267
172588	REC173944	278
172869	REC581528	276
172869	PH375-0033	275
173029	TEN00912	272
173944	REC173944	278
175316	REC0175316	283
22631 + 22632 + 22633	REC986979	350-351-352
319771	REC386573	315
320775 + 320776	REC320775	339-368-369-370
323653	REC93-06522	272
334451	CM334451	267
334451	CM334451A	267
378444	REC378444	275
384163	PH130-0045	274
384461	REC0385008	281
385008	REC0385008	281
3853818	TEN00903	269
3854061	TEN00920	270
385818	TEN00902	269
386430	PH130-0014	274
386573	REC386573	315
386591	PH130-0038	273
392061	REC396701	316
392133	PH130-0038	273
393023	TEN00907	270
396701	REC396701	316
397338 + 318304 + 318303	REC22670	340-350-351
397627 + 345992 + 332491	REC22660	336-350-351
398331	TEN00910	271
398453	REC439072	316
398729	REC396701	316
432397	CM334451	267
432397	CM334451A	267
432397	TEN00913	271
434495	PH200-T005	277
434841	REC6F5-12411-03	323
435123 + 336574 +337774 / 914716	GLM22650	
435442	REC438996	316
435532	PH200-T021	277
435548	REC435548	277
436367	REC0436367	282
437801	PH200-T021	277
438559	REC438559	318
438878	PH130-0032	274
438996	REC438996	316
439072	REC439072	316
439074	REC439075	316
439937	PH200-T004	277
5005266	REC5007335	265
500581	REC0500581	266
5005822	PH200-T072	277
5005875	PH200-T072	277
5006319	PH200-T061	277
5007089	TEN00918	271
5007326	REC5007335	265
5009214	REC586774	276
502881	REC0502881	287
502890	REC0502890	287
5030225	REC37830-89E03	289
5030265	TEN00930	270
5030907	TEN00926	272
5031411	REC16510-87J00	266
5031481	REC37820-92E03	289
5031482	PH200-T062	277
5031483	PH375-0047	276
5032047	REC37830-89E03	289
5032167	REC25700-95D01	358
5032195	PH375-0047	276
5032617	REC63P-13907-03	318
5033539	REC16510-90J00	266
5033838	REC38100-96J00	277
5033919	REC16510-82703	266
5034526	REC38100-96J00	277
5034616	TEN00926	272
5034627	REC38100-96J00	277
5034959	REC13119-93J00	314
5035113	REC38100-96J00	277
5035703	REC16510-93J00	266
5036081	PH200-T062	277
5814014	REC0582262	283
581528	REC581528	276
581651	REC0763770	281
581670	REC5000611	279
581731	REC0582056	284
581805	REC0582125	283
582115	REC0582115	284
582138	REC0582642	283
582262	REC0582262	283
582366	REC584561	289
582453	REC0582452	283
582474	REC0582901	283
582574	REC0583668	280
582684	REC0582125	283
582847	REC0583670	280
582864	REC0582901	283
582888	REC0502888	287
582901	REC0582901	283
583041	REC0582262	283
583050	REC0583668	280
583103	REC0582262	283
583117	REC0583670	280
583122	REC0583320	284
583125	REC0582115	284
583143	REC0582115	284
583266	REC0583689	278-279
583274	REC0583668	280
583289	REC0763776	281
583336	REC0582262	283
583340	REC0763767	280
583380	REC0582452	283
583408	PH350-0001	276
583410	REC0763769	281
583415	REC0763765	281
583471	REC0584035	282
583473	PH130-0017	274
583476	REC0586667	282
583482	PH130-0016	274
583485	REC0584333	279
583489	REC0584041	282
583508	REC0763782	281
583533	REC763775	281
583536	REC0763767	280
583561	REC0584288	280
583663	REC300-26084	284
583667	REC300-26084	284
583670	REC0583670	280
583710	REC0763764	280
583773	REC0584028	283
583777	REC584030	283
583896	REC300-26085	284
584029	REC584030	283
584030	REC584030	283
584034	REC0584035	282
584109	REC0763759	280
584122	REC0436367	282
584265	REC0586343	281
584287	REC0583415	280
584288	REC0584288	280
584292	REC0763764	280
584329	REC300-26085	284
584331	REC300-26085	284
584488	REC300-26084	284
584489	REC300-26085	284
584528	REC0586695	284
584560	REC0763763	280
584561	REC584561	289
584608	PH130-0013	273
584636	REC0586661	282
584643	REC0763779	280
584746	REC0586695	284
584755	REC0763770	281
584767	REC5001344	284
584768	REC5001344	284
584804	REC0763773	281
584808	REC5004532	282
584849	REC0763760	280
584908	REC5001344	284
584910	REC0584985	282
584914	REC0586343	281
584980	PH130-0027	274
584986	REC0584986	282
584988	REC0584986	282
585059	PH130-0017	274
585061	PH130-0038	273
585074	REC5001344	284
585134	MP28870	289
586015	REC0765386	282
586257	PH130-0032	274
586271	REC0586271	278-279
586275	PH130-0013	273
586277	PH130-0026	274
586278	PH130-0038	273
586284	PH130-0027	274
586343	REC0586343	281
586768	PH130-0035	274
586774	REC586774	276
587045	PH130-0035	274
76376	REC0763760	280
763763	REC0763763	280
763765	REC0583415	280
763779	REC0763779	280
777699	PH375-0033	275
777700	REC378444	275
778021	PH375-0030	275
778886	REC16510-90J00	266
979774	PH375-0030	275
982277	CM982438	268
983870	REC1397-2150	266
985237	REC435548	277
986158	TEN00919	270
YMM-2E227-00	RACS3227	264

ÍNDICE

CONECTORES COMBUSTIBLE 391
ÁNODOS 391
MOTORES DE ARRANQUE 391
BUJÍAS 392
KITS RETENES COLA 392
• KITS BOMBA AGUA 392
IMPULSORES 392

ÍNDICE REF 393

TABLE OF CONTENTS

FUEL FITTING 391
ANODES 391
STARTERS 391
SPARK 392
GEAR SEAL KITS 392
• WATER PUMP KIT 392
IMPELLER 392

TABLE OF REF 393

INDICE

ATTACCHI BENZINA 391
ANODI 391
MOTORINI AVVIAMENTO 391
CANDELE 392
KIT GUARNIZIONE PIEDE 392
• KIT POMPA ACQUA 392
GIRANTE 392

INDICE REF 393

CONECTORES COMBUSTIBLE
FUEL FITTINGS
ATTACCHI BENZINA

Ref.	R.O. OEM	Rosca Thread Passo	Envase (x blister) Pack (x skinpack) Qnt (x Blister)
GS31077	F213238T 2	1/4" NPT	1

MOTORES / ENGINES / MOTORI
(-1992)
5 HP (1993-97)
9.9, 15, 25 HP

GOLDENSHIP



Ref.	R.O. OEM	Rosca Thread Passo	Envase (x blister) Pack (x skinpack) Qnt (x Blister)
GS31086	F197787T 3	5/16"	1
GS31087	F197787T 3	3/8"	1

MOTORES / ENGINES / MOTORI
(-1992)
5 HP (1993-97)
9.9, 15, 25 HP

GOLDENSHIP



ÁNODOS
ANODES
ANODI

Ref.	R.O.		Peso Weight Peso
CM826134	34762A1	Cinc / Zinc / Zinco	
CM826134A	34762A1	Aluminio / Aluminium / Alluminio	



Ref.	R.O.		Peso Weight Peso
CM825271	34762A1	Cinc / Zinc / Zinco	
CM825271A	34762A1	Aluminio / Aluminium / Alluminio	



Ref.	R.O.	Peso Weight Peso
CMF707485		



Ref.	R.O.	Peso Weight Peso
CMF5H025		



Ref.	R.O.	Peso Weight Peso
CM523485		



Ref.	R.O.	Peso Weight Peso
CM819232		



Ref.	R.O.	Peso Weight Peso
CM817795A1		



MOTORES DE ARRANQUE
STARTERS
MOTORINI AVVIAMENTO

Ref.	R.O.	Tiempos Strokes Tempi	Dientes Tooth Denti
PH130-0022	50-820193, 50-820193A1, 50-820193T1	2	13

MOTORES / ENGINES / MOTORI
40-50 HP (1992-99)



Ref.	R.O.	Tiempos Strokes Tempi	Dientes Tooth Denti
PH130-0047	480955, 490955, 50-819085, 61-6955	2	9

MOTORES / ENGINES / MOTORI
70-150HP (1983-99)



BUJÍAS CHAMPION
SPARK CHAMPION
CANDELE CHAMPION

Potencia HP / Power HP / Potenza HP	Año / Year / Anni	Ref CHAMPION
3 HP	1990-94	CHAQL87YC / L87YCC
5 HP	1988-97	CHAQL87YC / L87YCC
9.9 HP	1984-97	CHAQL87YC / L87YCC
15 HP	1984-97	CHAL82YCC
25 HP	1989-91	CHARL82C
25 HP	1996-97	CHAL82YCC
35 HP	1989-91	CHARL82C
50 HP	1984-87	CHAUL81C
50 HP	1991-97	CHAUL81C
85 HP	1983-89	CHAUL81C
125 HP	1983-89	CHAUL81C



BUJÍAS NGK
SPARK NGK
CANDELE NGK

Potencia HP / Power HP / Potenza HP	Año / Year / Anni	Ref NGK
3 HP	1990-94	NGKBP6HS
4 HP	1984-87	NGKB6HS
5 HP	1988-97	NGKBP6HS
7.5 HP	1995+	NGKB6HS
9.9 HP	1984-97	NGKBP6HS
15 HP	1984-97	NGKBP6HS
25 HP	1989-91	NGKBP6HS
25 HP	1996-97	NGKBP6HS
35 HP	1989-91	NGKBP6HS
40 HP	1992-97	NGKBUZHW
50 HP	1984-87	NGKB7HS
50 HP	1991-97	NGKBUZHW
60 HP	1985+	NGKBUZHW
70 HP	1991-95	NGKBUZHW
75 HP	1996-97	NGKBUZHW
85 HP	1983-89	NGKBUHX
90 HP	1991-97	NGKBUZHW
120 HP	1991-97	NGKBUZHW
125 HP	1983-89	NGKB7HS
150 HP	1991-94	NGKBUZHW



KIT RETENES DE COLAS
GEAR SEAL KITS
KIT GUARNIZIONE PIEDI

Ref.	R.O.
RECFK1065	FK1065

MOTORES / ENGINES / MOTORI
9.9 - 15 HP



KITS BOMBA AGUA
WATER PUMP KIT
KIT POMPA ACQUA

Ref.	R.O.
RECFK1069	FK1069



Ref.	R.O.
REC12012	



IMPULSORES
IMPELLER
GIRANTE

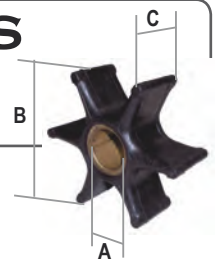

Modelo / Model / Modello	R.O. / OEM	Ref. RECMAR	Medidas / Measurments / Misure A	B	C
9.9 HP 15 HP	47-F436065-2	CEF500334	13,85	57,00	14,80
25 HP 35 HP	47-F462065	CEF500335	14,35	57,35	15,00
90 HP 120 HP 150 HP	47-F69406 47-F803631	CEF500313G	22,20	60,00	33,80
35, 45, 55 HP (1976 - 80)	47-F433065	CEF500342	16,00	57,00	15,00
70, 75 HP (1979-80)	47-F84065	CEF500397	20,85	57,20	19,60
75 HP 140 HP	47-F523065-1	CEF500390	20,90	57,20	29,60



CEF500334 CEF500335 CEF500342



CEF500313G CEF500397 CEF500390

ÍNDICE / TABLE OF CONTENTS / INDICE
REF-->R.O. / OEM

REF.	R.O. /OEM	PAG
CEF500313G	47-F69406	392
CEF500313G	47-F803631	392
CEF500334	47-F436065-2	392
CEF500335	47-F462065	392
CEF500342	47-F433065	392
CEF500390	47-F523065-1	392
CEF500392	47-F84065	392
CM523485		391
CM817795A1		391
CM819232		391
CM825271	34762A1	391
CM825271A	34762A1	391
CM826134	34762A1	391
CM826134A	34762A1	391
CMF5H025		391
CMF707485		391
CHAL82YCC		392
CHARL82C		392
CHAUL81C		392
GS31077	F213238T 2	391
GS31086	F197787T 3	391
GS31087	F197787T 3	391
NGKB6HS		392
NGKB7HS		392
NGKBP6HS		392
NGKBUHX		392
NGKBUZHW		392
PH130-0022	50-820193	391
PH130-0022	50-820193A1	391
PH130-0022	50-820193T1	391
PH130-0047	480955	391
PH130-0047	490955	391
PH130-0047	50-819085	391
PH130-0047	61-6955	391
REC12012		392
RECFK1065	FK1065	392
RECFK1069	FK1069	392

ÍNDICE / TABLE OF CONTENTS / INDICE
R.O. / OEM --> REF

R.O. /OEM	REF	PAG
480955	**PH130-0047**	391
490955	**PH130-0047**	391
34762A1	**CM825271**	391
34762A1	**CM825271A**	391
34762A1	**CM826134**	391
34762A1	**CM826134A**	391
47-F433065	**CEF500342**	392
47-F436065-2	**CEF500334**	392
47-F462065	**CEF500335**	392
47-F523065-1	**CEF500390**	392
47-F69406	**CEF500313G**	392
47-F803631	**CEF500313G**	392
47-F84065	**CEF500392**	392
50-819085	**PH130-0047**	391
50-820193	**PH130-0022**	391
50-820193A1	**PH130-0022**	391
50-820193T1	**PH130-0022**	391
61-6955	**PH130-0047**	391
F197787T 3	**GS31086**	391
F197787T 3	**GS31087**	391
F213238T 2	**GS31077**	391
FK1065	**RECFK1065**	392
FK1069	**RECFK1069**	392

NORMAS PARA LA DEVOLUCIÓN DE PIEZAS EN STOCK

Recambios Marinos S.L. aceptará la devolución de aquellas piezas que se hayan pedido por error.

No se aceptarán devoluciones de material cuyo importe sea inferior a **30€.**

DAÑOS OCASIONADOS POR EL TRANSPORTE:
Se aplicará lo indicado en el artículo 366 de Código de Comercio, que dice: *"Dentro de las veinticuatro horas siguientes al recibo de las mercancías, podrá hacerse reclamación contra la empresa de transporte asignada. Transcurridos los términos expresados o pagados los portes, no se admitirá reclamación alguna contra el transportista sobre el estado en que se entregó la mercancía".*

El material que enviamos diariamente desde **Recambios Marinos S.L.** a nuestros clientes es examinado antes de empaquetarse para su perfecta integridad y evitar daños en el transporte. Recuerde que es muy importante inspeccionar las cargas en presencia del transportista. Cuando se observen daños en la caja, deberá incluirse en el albarán de entrega del transp ortista una mención del tipo (conforme mercancía, salvo inspección), y deberá ser firmada por usted y el transportista, en caso de recibir material defectuoso por estas causas debe hacerlo constar tanto al transportista como a **Recambios Marinos S.L.** para poder reclamar a la empresa de transporte correspondiente.

REQUISITOS FORMALES:
El material a retornar, tiene que estar reflejado en un albarán. Debe solicitar a **Recambios Marinos S.L.** un número de devolución. Ni el material ni el embalaje deben presentar desperfectos.

Recambios Marinos S.L. le facilitara un número de pre-autorización de devolución junto al impreso de solicitud de devolución de piezas en stock, una vez complementado correctamente, se remitirá a **info@recambiosmarinos.es** adjuntando la copia del alabarán donde se refleje el artículo. Bajo ningún concepto se aceptarán devoluciones que no cumplan con alguno de estos puntos, serán retornadas a portes debidos. El documento de devolución lo pueden encontrar en la web **www.recambiosmarinos.es**

PLAZOS:
El plazo máximo para solicitar el número de autorización de devolución, será de 15 días naturales contados a partir de la fecha de expedición de la mercancía. El plazo para la devolución de la mercancía será, como máximo de 15 días naturales contados a partir de la fecha de recepción del número de pre-autorización de devolución (será notificado por **Recambios Marinos S.L.**)

CONDICIONES:
Recambios Marinos S.L. no aceptará devoluciones, cualquiera que fuese el motivo de ésta.

Artículos no retornables:
- Calzado.
- Material eléctrico.
- Material solicitado por encargo.
- Ánodos, anclas, cadena, mangueras.
- Artículos obsoletos o descatalogados.
- Hélices, neumáticas, Paddle Surf y motores Parsun.
- Aceites, pinturas, grasas, líquidos, incluyendo cualquier producto de limpieza y mantenimiento en general.

Todas las devoluciones de material que previamente hayan sido autorizadas, se remitirán a **Recambios Marinos S.L.** a portes pagados dentro de los plazos establecidos, adjuntando la copia de los albaranes y la solicitud de devolución aceptada.

ABONOS:
Recambios Marinos S.L. procederá a abonar todas las devoluciones (que cumplan todos y cada uno de los requisitos formales, plazos y condiciones) por un importe del 90% del facturado originalmente. El 10% restante irá destinado a soportar los costes originados por las devoluciones (manipulación, embalaje, control de calidad...).

RESERVA DE PROPIEDAD:
Recambios Marinos S.L. se reserva el derecho de propiedad de todos los materiales que suministre hasta que el comprador haya satisfecho el pago total de los mismos.

PARTS RETURN GUIDELINESS

In order to help our distributors to keep a healthy and profitable stock, **Recambios Marinos S.L.** will accept the return of those goods that the distributor has ordered by error.

For this concept, a restocking fee of 20% will be charged on the parts net price.

In the case you return parts wrongly shipped by **Recambios Marinos S.L.**, **NO RESTOCKING FEE** will be charged.

Also to ensure the success of your return of goods, following guidelines need to be followed:

1. Fill in the Parts Return form as per the attached document in order that Recambios Marinos can duly evaluate and send it by e-mail to fina@recmar.es with copy of the invoice where the goods were originally charged to you. Parts return under 30€ will not be accepted.
2. Parts return pre-authorization number would have to be requested within the 15 days after the parts date purchase which will be sent by Recambios Marinos asap.
   RGxxxx
   NO RETURNS WILL BE ACCEPTED WITHOUT THIS PRE-AUTHORIZATION NUMBER.
3. Although a pre-authorization exist, the final credit can be rejected if our parts department considers that there the parts have arrived in bad restocking conditions.
4. The parts must be returned within the next 15 days after **Recambios Marinos S.L.** authorization.
5. All the returned parts have to be shipped in the original box, well identified and marked with the RG number outside the box for easy identification when they arrive in our warehouse.
6. A copy of the Parts Return form has to be included with the returned parts.
7. All the returned parts have to arrive transport paid to **Recambios Marinos S.L.**.
8. After inspection of our parts department, **Recambios Marinos S.L.** will issue a credit memo (if it corresponds) that will be booked in your account for next purchases.

The listed below items will not be accepted under any concept since they are Non returnable products:
- Oils, greases and consumables in general.
- Electronical parts already assembled in the unit.
- Obsolete / out of catalogue parts.
- Propellers, gauges, control boxes, steering cables.
- Shoes
- Electric material
- Parts ordered exclusively for you.
- Anodes, anchors, chain and hoses.
- Boats, outboard engines or paddle surf.

TRANSPORT DAMAGE
The material we daily ship from **Recambios Marinos S.L.** to our clients is inspected before to be packed to ensure its integrity and avoid transport damages. Please remember that it is very important to check all the goods received in front of the transport driver. If you observe any possible damage, you must indicate in the delivery note and give a copy to the transport driver and sign it both of you. This will speed up the claim to the transport company.

REGOLE PER RESI IN STOCK

Recambios Marine S.L. accetta i resi di quelle parti che sono state ordinate per errore. I resi di materiale il cui importo è inferiore a 30 € non saranno accettati .

DANNI CAUSATI DAL TRASPORTO
Esso si applica, come indicato all'articolo 366 del codice di commercio, che recita: *"Entro ventiquattro ore dalla ricezione della merce si puó reclamare contro la ditta di trasporti assegnata. Dopo i termini espressi o pagate le spese, non si ammetterá reclamazione nei confronti del vettore sullo stato in cui è stata consegnata la merce".*

Il materiale che inviamo giornalmente dalla **Recambios Marinos S.L.** ai nostri clienti é controllato prima di essere impacchettato per mantenere la sua perfetta integritá, e evitare danni nel trasporto. Ricordi che é molto importante ispezionare la merce in presenza del corriere. Quando si notano danni nella scatola, bisognerá includere nella bolla di consegna del corriere una dicitura del tipo (accettato con riserva, dopo ispezione), e dovrá essere firmata da lei e dal corriere, in caso di ricevere materiale difettoso per queste cause deve farlo costatare tanto al corriere come alla **Recambios Marinos S.L.** per poter reclamare alla ditta di trasporti correspondente.

REQUISITI FORMALI:
El material a retornar, tiene que estar reflejado en un albarán. Debe il material da restituire, deve essere indicato in una bolla.Deve richiedere alla **Recambios Marinos S. L.** un numero per il reso. Ne il materiale ne l'imballaggio devono presentare difetti.

Recambios Marinos S. L. facilitará un numero di preautorizzazione al reso insieme al modulo di richiesta al reso in stock, una volta compilato correttamente, si inviará a Info@recambiosmarinos.es allegando la copia della bolla dove compare il materiale.In nessun caso si accetteranno resi che non compiano con tutti i requisiti, saranno restituiti aggiungendo le spese di trasporto.Il modulo lo potete trovare nella web www.recambiosmarinos.es.

SCADENZE:
La data massima per reclamare il numero di autorizzazione al reso, sará di 15 giorni naturali contando a partire dalla data di spedizione della merce.Il tempo per restituire la merce sará come massimo 15 giorni naturali contando a partire della data di ricevimento del numero di preautorizzazione del reso (sará notificato per la **Recambios Marinos S. L.**)

CONDIZIONI:
Recambios Marinos S.L. non accetterá resi, qualsiasi motivo sia per questa merce Articoli non accettati:

- Calzature
- Materiale elettrico
- Materiale su ordinazione
- Anodi, ancore, catene, tubi
- Articoli obsoleti o scatalogati
- Eliche, gommoni, paddle surf e mpotori parsun
- Olio, vernici, grasso,liquidi, inclusi tutti i prodotti di pulizia e manutenzione in generale.

Tutti i resi di materiale che previamente sono stati autorizzati si spediranno a **Recambios Marinos S.L.,** a spese pagate dentro dei termini stabiliti aggiungendo la copia delle bolle e la richiesta di reso accettata.

NOTE DI CREDITO:
Recambios Marinos S.L. procederá a abbonare tutti i resi (che compiano tutti i requisiti formali, tempi e condizioni) per un importo del 90% del fatturato originalmente. Il 10% restante andrá destinato a coprire i costi derivati per i resi (manipolazione, imballaggio, controllo qualitá ecc.)

RISERVA DI PROPIETÁ:
Recambios Marinos S.L. si riserva il diritto di propietá di tutti i materiali che somministra fino a che il compratore non ha corrisposto il pagamento totale dello stesso.

Coordinación: Carlos Sánchez
Diseño y maquetación: Leni Fernández
Impresión: Ibérica Gráfica, s.a.
www.ibericagrafica.es

WWW.RECAMBIOSMARINOS.ES

BARCELONA

Jocelyn Bell, 26
Pol. Ca n'Alemany
08840 Viladecans (Barcelona)
Tel. 902 10 85 85
93 633 34 80

International
phone: (+34) 93 662 66 55

info@recmar.es

GIRONA

C/ Gironés, 5
Pol. Ind. El Plà
17486 Castelló d'Empúries (Girona)
Tel. 972 158 809

girona@recmar.es

CANARIAS

Avda. Los Majuelos, 14
38108 La Laguna (Tenerife)
Tel. (+34) 922 621 499
Móvil 628 592 042

canarias@recmar.es